Operator Manual

LR4NX-FA

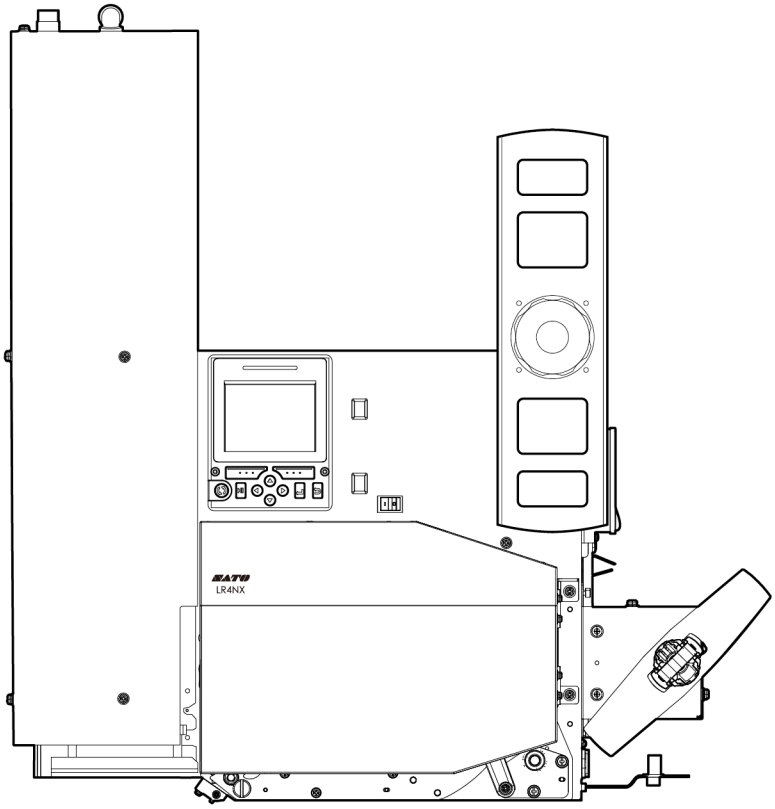

Table of Contents

Before You Start.....7
About This Manual.....7
Features of the Product.....8
Safety Precautions.....9
About Warning Stickers.....15
Precautions for Installation and Handling.....16
Select a Safe Location.....16
Power Supply.....17
Printing.....18
Regulatory Approval.....19
Environmentally Hazardous Materials.....20
Copyrights/Limitation of Liability/Trademarks.....21
Copyrights.....21
Limitation of Liability.....22
Trademarks.....23

Basic Information.....24
Bundled Accessories.....24
Parts Identification.....25
Parts Identification for the Product.....25
Front View.....25
Rear View.....26
Internal View.....27
Parts Identification for the Operator Panel.....29
Using the Operator Panel.....31
Display and Operation of the Operator Panel.....31
LED Indicator.....31
Operations in Online/Offline Mode.....31
Status Icon.....32
Operations When Errors Occur.....35
Guidance Videos.....38
Canceling the Print Job.....43
Adjustments Mode.....45
Adjusting the Settings Using Adjustments Mode during Printing.....45
How to Use [Port Monitor].....46
Settings Mode.....48
Settings Mode Menus.....48
Changing to the Settings Mode.....48
Logging In to/Logging Out of the Settings Mode.....50
Item Selection.....50
Setting Value Input or Selection.....52
Product Memory and USB Memory.....57

Getting Started.....58
Connecting the Air, Warning Lamp, and Power Cord.....58
Connecting to External Devices.....60
Powering On/Off the Product.....61
Powering On the Product.....61

Powering Off the Product....62
Loading Media and Ribbon....63
Media, Ribbon and Print Methods....63
Loading Media....64
Usable Media....64
Precautions for Loading the Media....64
Loading the Media Roll....65
Replacing the Media Roll....70
Removing the Liner from the Rewinder....76
Loading Ribbon....77
Checking the Ink Side of the Ribbon....77
Loading the Ribbon....78
Replacing the Ribbon....81
When to Replace Media and Ribbon....87
Conditions That Trigger Paper End....87
Conditions That Trigger Label Near End....88
Conditions That Trigger Ribbon End....89
Conditions That Trigger Ribbon Near End....89
Media Settings....91
Print Method....92
Media Sensor Type....95
Connecting the Product to a Computer....98
Procedure for Connecting the Product to a Computer....99
Connecting Interfaces....100
Available Interfaces....100
LAN Interface Connection....100
RS-232C Interface Connections....101
IEEE1284 Interface Connection....102
Configuring the Interface Settings from the Interface Menu of the Product....104
Installing the Printer Driver....107

Various Settings of the Product....108
The Product's [Settings] Menu....108
[Shortcut] Menu....108
[Printing] Menu....109
[Label Length]....110
[Label Width]....111
[Auto Measure]....111
[Printing Mode]....112
[Ribbon Near End]....113
[Speed]....113
[Sensor Type]....114
[Print Mode]....115
[Backfeed]....115
[Darkness Range]....117
[Darkness]....117
[Imaging]....118
[Advanced]....121
[Interface] Menu....145
[Network]....146
[IEEE1284]....211
[RS-232C]....213
[Ignore CR/LF]....218
[Ignore CAN/DLE]....218
[Applications] Menu....220
[Applicator]....221
[Protocol]....244
[SBPL]....246

[SZPL]....257
[SIPL]....262
[STCL]....266
[SDPL]....273
[SEPL]....294
[AEP]....298
[System] Menu....301
[Regional]....302
[Notifications]....308
[Sound]....313
[LCD Brightness]....314
[Show Total Count]....315
[Password]....316
[Tools] Menu....320
[Test Print]....321
[HEX-Dump]....331
[Reset]....338
[Profile]....342
[Certificates]....346
[Clone]....347
[Support Info]....348
[Startup Guide]....349
[Information] Menu....351
[Help]....352
[Build Version]....353
[Applications]....355
[Installation Log]....355
[Print Module]....357
[Applicator]....358
[Counters]....361
[IPv4 Address]....363
[IPv6 Address]....363
[LAN MAC]....364
Configuring the Product Settings from a Web Browser....365
Accessing to the Web Configuration Page....365
Dashboard....367
Settings....368
Tools....370
Certificates....372

Various Ways to Output....373
Outputting with General-purpose Software....373
Outputting and Controlling with Dedicated Command....374

Adjusting the Product....375
Printable Area....375
Media Sensor Positions and Media Stop Positions....376
Adjusting the Base Reference Point....379
About the Base Reference Point....379
Adjusting the Print Position....381
Adjusting the Dispenser Stop Position....384
Adjusting the Print Quality....387
Adjusting the Print Darkness....387
Adjusting the Print Speed....390
Workflow for Application Operations....393
Operation 1: Cylinder Jet (CJ) Method Application (Print and Wait/Wait at Front End)....393

Operation 2: Cylinder Jet (CJ) Method Application (Print and Wait/Wait at Origin)..... 395
Operation 3: Cylinder Jet (CJ) Method Application (Wait Printing).....397
Operation 4: Pressure Jet (PJ) Method Application (Print and Wait).....399
Operation 5: Pressure Jet (PJ) Method Application (Wait Printing).....401
Operation 6: Pressure Jet (PJ) Method Application (Blow Action at PJ Miss: Enabled)..... 403
Operation 7: Pass Operation (Print and Wait).....405
Operation 8: Pass Operation (Wait Printing)..... 407
Operation 9: Printing and Applying Labels According to Various Input Signals.....409
Adjusting the Product's Buzzer Volume.....411
Initializing the Product.....413
Procedures for Initializing.....413
Initializing the Data Saved on the Product..... 413
Initialize the Setting Values and Data on the Product..... 416
Initialize the Setting Values on the Product.....420
List of Initial Values.....425
[Printing] Menu..... 425
[Interface] Menu..... 427
[Applications] Menu.....434
[System] Menu..... 439
[Tools] Menu.....440
[Information] Menu..... 443

Maintenance..... 444
Cleaning the Product.....444
Cleaning.....444
Cleaning Intervals.....445
Cleaning the Print Head.....446
Using the Cleaning Products to Clean..... 446
Cleaning Using the Cleaning Sheet (Option).....450
Cleaning the Platen Roller..... 455
Cleaning the Pressure Nip Roller..... 459
Cleaning the Suction Plate, Media and Ribbon Rollers.....463
Replacing Consumable Parts.....470
Replacing the Print Head.....470
Replacing the Platen Roller..... 475
Replacing the Nip Roller.....480
Replacing the Pressure Nip Roller..... 484
Operating the Notification Screen of SOS (SATO Online Services) (SOS users only)..... 487
Operating the Notification Screen of the SOS (SATO Online Services) On-Demand Mode (SOS users only).....487
Operating the Date and Time Settings Notification Screen of SOS (SATO Online Services) (SOS users only).....488
SOS (SATO Online Services) Application (SOS users only).....490

When You Are in Trouble..... 491
When an Error Message Appears..... 491
Error Message Indication and Operating Procedure When the SOS (SATO Online Services) Is Enabled (SOS users only)..... 542
Contact Information for When You Are in Trouble.....544

Product Specifications.....545
Specifications.....545
Hardware..... 545
Interface.....550
Supported Interfaces.....550

LAN Interface..... 550
RS-232C Interface.....551
IEEE1284 Interface..... 553
Terminals for External Input/Output Signals..... 555
Built-in Functions.....568
Printer Languages..... 570
Standards.....571
Usable Media and Ribbon.....572
Media..... 572
Ribbon.....573
Usable Fonts and Barcodes.....574
Fonts.....574
Barcodes.....598

Support and Warranty.....600
SOS (SATO Online Services) (SOS users only)..... 600
Maintenance Support..... 601
Warranty Period for Consumables.....602

Before You Start

About This Manual

Thank you for purchasing the SATO LR4NX-FA (hereafter referred to as the product).

This manual supplies basic information on how to operate the LR4NX-FA. Read the manual carefully to understand each function of the LR4NX-FA before operation.

Symbols

This operator manual uses following symbols:

Item	Description
Warning	The Warning symbol indicates that you can cause death or serious injury if you do not follow the instructions or procedures.
Caution	The Caution symbol indicates that you can cause injury or property damage if you do not follow the instructions or procedures.
Note	The Note symbol indicates useful and supplemental information that you should know.
Reference	The Reference symbol indicates the link of relevant information.

- Reproduction in any manner of all or part of this document is prohibited.
- The contents of this document may be changed without prior notice.
- Great care has been taken in the preparation of this document, but if any problems, mistakes, or omission are found, please contact your SATO reseller or technical support center.

- The illustrations in this manual use the left-hand type, unless otherwise noted.
- This manual uses the build version 4.1.0-r1 firmware in its descriptions.

Features of the Product

This product is a high-performance automatic labeling system with a robust casing made of metal and equipped with versatile functions. The main features of the product are as follows:

- High-quality printing
- Print speed reaches maximum of 10 inches/second (254 mm/second)
- Supports a 600 meters (1968.5 feet) ribbon
- Consumables, such as the print head and platen roller, can be easily replaced without using tools
- Help videos guide you through easy operations from installing ink ribbons and labels to replacing consumables
- Three color warning lamp with buzzer warns people in the area if trouble occurs
- Equipped with high legibility TFT color 3.5-inch LCD and LED
- Cleaning timing is announced on screen and with the warning lamp
- Supports 31 languages for display and 47 languages for printing scalable fonts
- LAN, RS-232C, and IEEE1284 are standard equipment
- Possible to duplicate and backup setting information to USB memory
- Large array of labeling formats supported

Safety Precautions

This topic describes how to use the product safely.

Be sure to read the following information carefully before using the product.

Pictographic Symbols

This operator manual and the product labels use a variety of pictographic symbols. These symbols emphasize the safe and correct use of the product and to prevent injury to others and property damage. The explanation of the symbols is as follows. Be sure to understand these symbols well before you read the main text.

⚠ Warning	Ignoring the instructions marked by this symbol and erroneously operating the product could result in death or serious injury.
⚠ Caution	Ignoring the instructions marked by this symbol and erroneously operating the product could result in injury or property damage.

Example Pictographs

The △ pictograph means "Caution is required". A specific warning symbol is contained inside this pictograph (The symbol at left is for electric shock).

The ⃠ pictograph means "Should not be done". What is specifically prohibited is contained in or near the pictograph (The symbol at left means "Disassembly prohibited").

The ● pictograph means "Must be done". What is specifically to be done is contained in the pictograph (The symbol at left means "Unplug the power cord from the outlet").

⚠ Warning

Do not set on an unstable area	• Do not set on an unstable area, such as a wobbly table or slanted area or an area subject to strong vibration. If the product falls off or topples over, it could injure someone.
Do not place containers full of water or other liquid on the product	• Do not place flower vases, cups, or other containers holding liquids, such as water or chemicals, or small metal objects near the product. If they are spilled and get inside the product, immediately turn off the power switch, unplug the power cord from the outlet, and contact your SATO reseller or technical support center. Using the product in this condition could cause a fire or electric shock.
Do not put objects inside the product	• Do not insert or drop in metal or burnable objects inside the product's openings (cable outlets, etc.). If foreign objects do get inside the product, immediately turn off the power switch, unplug the power cord from the outlet, and contact your SATO reseller or technical support center. Using the product in this condition could cause a fire or electric shock.
Do not use other than the specified voltage	• Do not use other than the specified voltage. Doing so could result in fire or electric shock.
Always ground the connections	• Always connect the product's ground wire to a ground. Not grounding the ground wire could result in electric shock.

Handling the power cord	• Do not damage, break, or modify the power cord. Also,do not place heavy objects on the power cord, heat it, or pull it because doing so could damage the power cord and cause a fire or electric shock. • If the power cord becomes damaged (core is exposed, wires broken, etc.), contact your SATO reseller or technical support center. Using the power cord in this condition could cause a fire or electric shock. • Do not modify, excessively bend, twist, or pull the power cord. Using the power cord in such a condition could cause a fire or electric shock.
When the product has been dropped or broken	• If the product is dropped or broken, immediately turn off the power switch, unplug the power cord from the outlet, and contact your SATO reseller or technical support center. Using the product in this condition could cause a fire or electric shock.
Do not use the product when something is abnormal about it	• Continuing to use the product in the event something is abnormal about it, such as smoke or unusual smells coming from it, could result in fire or electric shock. Immediately turn off the power switch, unplug the power cord from the outlet, and contact your SATO reseller or technical support center for repairs. It is dangerous for the customer to try to repair it, so absolutely do not attempt repairs on your own.
Do not disassemble the product	• Do not disassemble or modify the product. Doing so could result in fire or electric shock. Ask your SATO reseller or technical support center to conduct internal inspections, adjustments, and repairs.
Do not operate with wet hands	• Do not operate the power switch or plug in/ unplug the power cord with wet hands. Doing so increases the risk of electric shock.

Using the head cleaning fluid	• Use of flame or heat around the head cleaning fluid is prohibited. Absolutely do not heat it or subject it to flames. • Keep the fluid out of reach of children to prevent them from accidentally drinking it. If a child accidentally drinks the fluid, immediately consult with a physician.
Print head	• The print head is hot after printing. Be careful not to get burned when replacing media or cleaning immediately after printing. • Touching the edge of the print head with bare hands could result in injury. Be careful not to become injured when replacing media or cleaning.
Do not use in hazardous locations	• The product is not explosion proof certified. • Do not use in a potentially explosive environment or atmosphere.
Do not insert hands into the label affixing area	• Do not insert hands into the label affixing area while the device is operating. Fingers may become sandwiched and injured between the cylinder and label adhesion unit.

Caution

Do not place in areas with high humidity	• Do not place the product in areas with high humidity or where condensation forms. If condensation forms, immediately turn off the power switch and do not use the product until it dries. Using the product while condensation is on it could result in electric shock.

Carrying the product	• When moving the product, always unplug the power cord from the outlet and check to make sure all external wires are disconnected before moving it. Moving the product with the wires still connected could damage the cords or connecting wires and result in a fire or electric shock. • Do not carry the product with media loaded in it. The media could fall out and cause an injury. • When setting the product on the floor or a stand, make sure not to get your fingers or hands pinched under the product feet.
Always close the cover of the product	• Always close the cover of the product during operation. You may get injured by touching the moving parts. Also, dust or foreign objects may enter and cause the product to malfunction.
Top cover, label affixing area	• Be careful not to get your fingers pinched when opening or closing the top cover or the label affixing area. Also be careful that the top cover does not slip off and drop.
Loading media	• When loading a media roll, be careful not to get your fingers pinched between the media roll and the supply unit.
When not using the product for a long time	• When not using the product for a long time, unplug the power cord from the outlet to maintain safety.
During maintenance and cleaning	• When maintaining and cleaning the product, unplug the power cord from the outlet to maintain safety.
Power cord and cables	• Grab power cords and cables by their plug when removing from electrical outlets or connector ports. Removing power cords and cables by grabbing the cord/cable may result in exposure of wires, breakage, fire, or electric shock. • Do not place power cords and cables near heaters or other sources of heat. Placing power cords and cables near heaters or other sources of heat may result in melting of the power cord/cable sheathing, fire, or electric shock.

Opening and closing the print head	• When opening and closing the print head, be careful not to insert foreign materials, other than media, in the print head. Otherwise, it may result in injury or damage.

About Warning Stickers

- For application methods that use an air cylinder, such as application methods that use a cylinder configuration, the label suction plate extends from the cylinder cover, applies a label, and then returns. Be careful that you do not pinch your fingers between the cylinder cover and the label suction plate. Do not touch the label applicator components with your hand while it is operating.
- When touching the connectors, etc. for inspections, always unplug the power cord from the outlet. Not doing so could cause an electric shock.

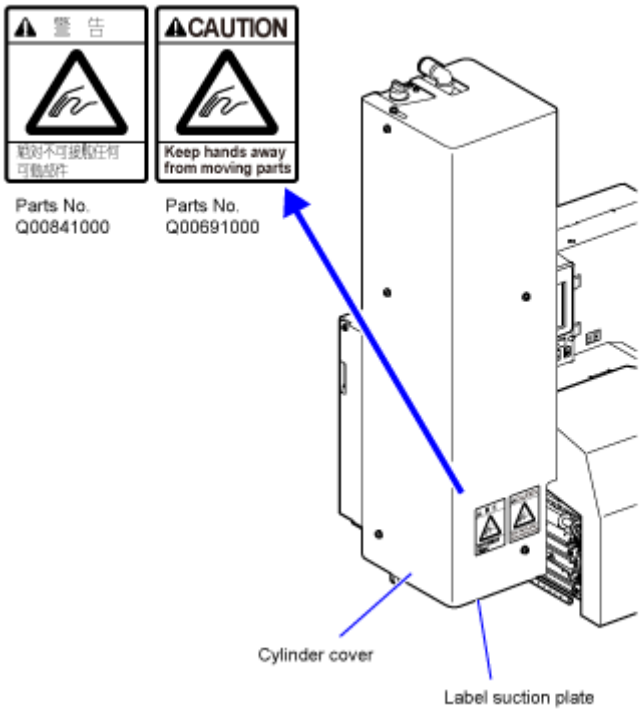

Warning stickers are very important for safe usage of the product. If any stickers fall off, are damaged, or fade, contact your sales representative with the parts numbers to order new ones.

Precautions for Installation and Handling

Select a Safe Location

Product operations can be affected by the product's environment.

Refer to the following instructions regarding how to install and handle the product.

- **Provide electric power from an AC outlet that has low voltage fluctuation.**

  If there is an electric device (such as a large refrigerator) that consumes large amounts of electricity nearby, the voltage of the AC power may fluctuate, when that device operates, and cause malfunctions.

- **Do not place the product in a location that is subject to vibration.**

  Subjecting the product to severe vibration or shock may cause a failure or damage to the product, leading to a product malfunction.

- **Keep the product out of high temperature and humidity.**

  Avoid locations subject to extreme or fast changes in temperature or humidity.

- **Do not install the product in a location exposed to water or oil.**

  Water or oil entering inside the product may cause a fire, electric shock or malfunction.

- **Avoid dust.**

  Dust build up may cause lowered print quality, faults, or malfunctions.

- **Keep out of direct sunlight.**

  The product has a built-in optical sensor. Exposure to direct sunlight may cause incorrect detection by the sensor so the product does not operate normally. Therefore, close the front cover when using the product.

- **Do not use in hazardous locations.**

  Do not use in a potentially explosive environment or atmosphere. Doing so could cause a fire of explosion.

Power Supply

Product operations can be affected by the product's environment.

Refer to the following instructions regarding how to install and handle the product.

- **The product requires an AC power supply.**

  Be sure to connect the product to an AC power supply.

- **Connect the power cord to a grounded AC outlet.**

  Make sure that the product is connected to a grounded AC outlet.

- **Supply a stable source of electricity to the product.**

  When using the product, do not share its AC outlet with other electrical devices. This could cause power fluctuations and performance issues with your product.

Printing

The print result varies depending on the usage environment (temperature and humidity), the supply condition (the combination of media and ribbon), and the product settings (the print speed, the print darkness, etc.).

Please sufficiently test the product in your use environment, and use it with the optimal combination.

If anything is unclear, or if you have any questions, contact your SATO sales representative or reseller.

Regulatory Approval

EN55032 Warning

This is a class A product.

In a domestic environment this product may cause radio interference, in which case the user may be required to take adequate measures.

Disposal of Old Electrical & Electronic Equipment (Applicable in the European Union and other European countries with separate collection systems)

	A product marked with this symbol on itself or on its packaging shall not be treated as household waste. Instead it shall be handed over to an appropriate collection point for the recycling of electrical and electronic equipment in accordance with local regulations. Inappropriate waste handling of this product may cause detrimental consequences for the environment and damage to human health. The recycling of materials will help to conserve natural resources and contribute to your community. For more detailed information on recycling of this product, please contact your local municipal organization, your household waste disposal service or the dealer where you purchased the product.

部件名称	有毒有害物质或元素					
	铅 (Pb)	汞 (Hg)	镉 (Cd)	六价铬 (Cr6+)	多溴联苯 (PBB)	多溴二苯醚 (PBDE)
印刷电路板	×	○	○	○	○	○
电源、交流转换器电池	×	○	○	○	○	○
热敏头、液晶显示屏	×	○	○	○	○	○
电动机、切纸机	×	○	○	○	○	○
树脂(ABS、PC等)	○	○	○	○	○	○
金属(铁、非铁金属)	×	○	○	○	○	○
电缆等	×	○	○	○	○	×
包装材料(纸盒等)	○	○	○	○	○	○

本表格依据SJ/T 11364的规定编制。

○：表示该有毒有害物质在该部件所有均质材料中的含量均在GB/T 26572 “电子信息产品中有毒有害物质的限量要求”的标准规定以下。

×：表示该有毒有害物质至少在该部件的某一均质材料中的含量超出GB/T 26572“电子信息产品中有毒有害物质的限量要求”的标准规定。

环保使用期限

本标志中的年数，是根据2006年2月28日公布的“电子信息产品污染防止管理办法”和SJ/T11364“产品污染防止标识要求”，适用于在中华人民共和国（除台湾、香港和澳门外）生产或进口的电子信息产品的“环保使用期限”。在遵守使用说明书中记载的有关本产品安全和使用上的注意事项、且没有其他法律和规定的免责事由的情况下，在从生产日开始的上述年限内，产品的有毒、有害物质或元素不会发生外泄或突变，使用该产品不会对环境造成严重污染或对使用者人身、财产造成严重损害。

注1): “环保使用期限”不是安全使用期限。尤其不同于基于电气性能安全、电磁安全等因素而被限定的使用期限。产品在经适当使同后予以废弃时，希望依照有关电子信息产品的回收和再利用的法律与规定进行处理。

注2): 本标志中的年数为“环保使用期限”，不是产品的质量保证期限。对于同一包装内包含电池、充电器等附属品的产品，产品和附属品的环保使用期限可能不同。

Environmentally Hazardous Materials

RoHS Directive

This product restricts the use of the six hazardous materials listed below, as specified by RoHS directive.

Hexavalent chromium	Max. 0.1%
Lead and lead compounds	Max. 0.1%
Mercury and mercury compounds	Max. 0.1%
Cadmium and cadmium compounds	Max. 0.01%
Polybrominated biphenyls (PBB)	Max. 0.1%
Polybrominated diphenyl ethers (PBDE)	Max. 0.1%

Compliance Status of REACH Regulation

(1) Status of registered chemical substances

No chemical substances are intentionally emitted, nor are there any chemical substances that are registered with the European Chemicals Agency.

(2) Information about the Substances of Very High Concern (SVHC) contained in the product

Currently, there is no information available regarding SVHC that exceeds 0.1% of the product's weight. In the future, if SVHC that exceed 0.1% of the product's weight are found, we will immediately communicate that information.

Copyrights/Limitation of Liability/Trademarks

Copyrights

Any unauthorized reproduction of the contents of this document, in part or whole, is strictly prohibited.

© 2018 SATO Corporation. All rights reserved.

Limitation of Liability

- SATO Corporation and its subsidiaries in Japan, the U.S. and other countries make no representations or warranties of any kind regarding this material, including, but not limited to, implied warranties of merchantability and fitness for a particular purpose. SATO Corporation shall not be held responsible for errors contained herein or any omissions from this material or for any damages, whether direct, indirect, incidental or consequential, in connection with the furnishing, distribution, performance or use of this material.
- Specifications and contents in this document are subject to change without notice.
- Be sure to perform a virus check for the USB memory before connecting it to the product. SATO Corporation shall not be held responsible for any product malfunctions caused by a virus spread via USB memory.

Trademarks

- SATO is a registered trademark of SATO Holdings Corporation and its subsidiaries in Japan, the U.S. and other countries.
- NiceLabel is a trademark or registered trademark of Euro Plus d.o.o. in the U.S.A and other countries.
- QR Code is a registered trademark of DENSO WAVE INCORPORATED.
- Windows and Internet Explorer are either registered trademarks or trademarks of Microsoft Corporation in the United States and/or other countries.
- Android, YouTube, the YouTube logo, and Google Chrome are trademarks or registered trademarks of Google Inc.
- iPad, iPhone, and Safari are trademarks of Apple Inc., registered in the U.S. and other countries.
- iOS is a trademark or registered trademark of Cisco in the U.S. and other countries and is used under license.
- All other trademarks are the property of their respective owners.

Basic Information

Bundled Accessories

After unpacking the product, make sure that you have all the bundled accessories. If there are any missing items, contact the SATO reseller where you purchased the product.

- Quick guide

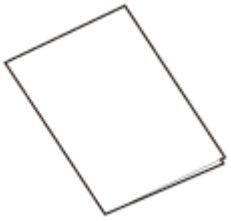

- Safety Instructions

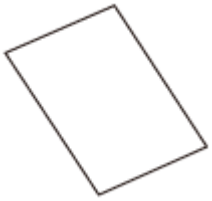

- Warning stickers
- Air regulator
- Air tubes
- AC power cord clamp
- I/F connector cap
- Warning lamp (specifications for three color lamp with buzzer)

- Oil mist filter

Parts Identification

Parts Identification for the Product

Front View

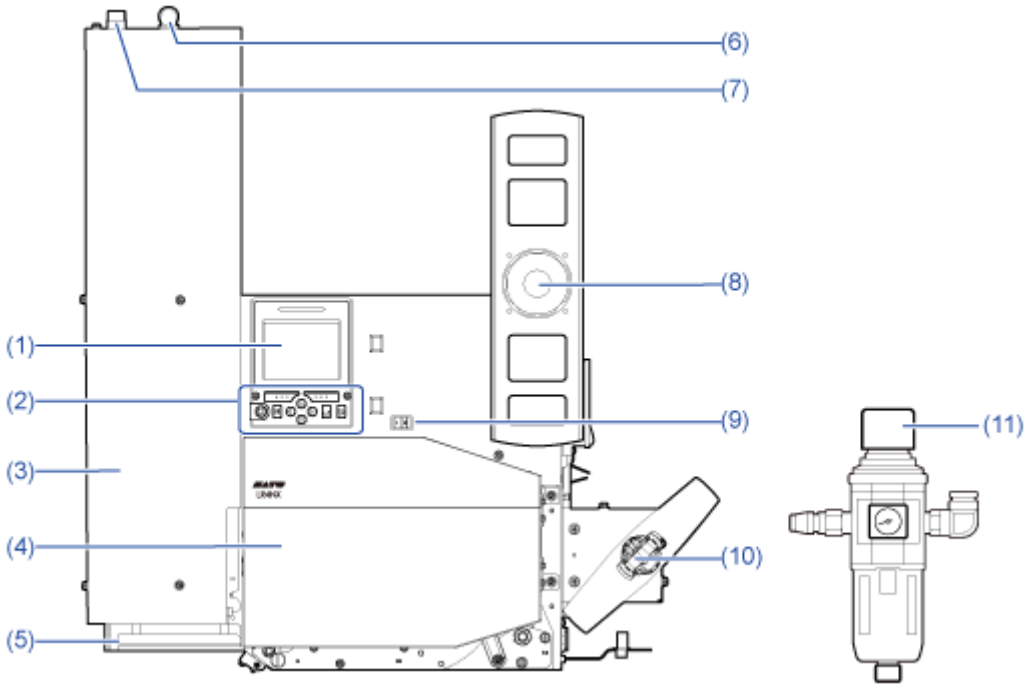

(1) **Display**

(2) **Operator panel**

(3) **Cylinder cover**

(4) **Front cover**

(5) **Label suction plate**

Attached to the end of the cylinder. Sucks the label and then applies it to the package.

(6) **Air regulator for blowing labels**

Adjusts the pressure of the air that blows the labels, which have been sucked onto the suction plate, onto the package.

- Water and oil may collect in the air if the factory's pipes are very long or if the air passes through a lubricator (lubricator for the compressed air). Never connect the air directly, if after several days water collects in the regulator, or oil seeps out of the air equipment and leaks out of the outlet.

(7) **Hand valve**

Valve to open and close the air supply for use by components other than the label blower.

(8) **Label feeder**

Feeds media to the product.

(9) **Power switch**

(10) **Liner winder**

(11) **Air regulator**

Adjusts the pressure of the air that is supplied to the product.

Rear View

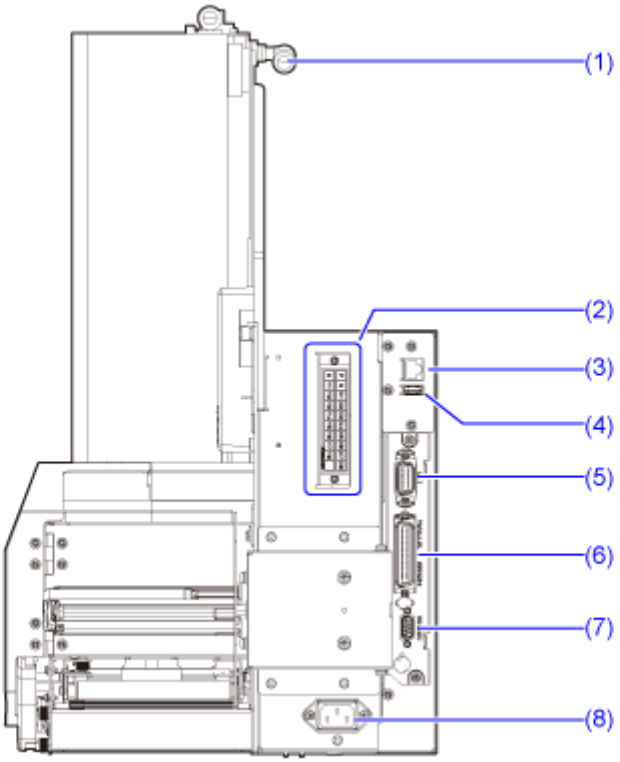

(1) **Air supply inlet**

Connect the air for blowing labels.

(2) **Terminal for external input/output signals**

This is the terminal for connecting external input/output signals.

(3) **LAN connector**

To connect the product to a network using the LAN interface.

(4) **USB connector (Type A)**

You can use a USB memory to store the product's settings and other information. Also, you can connect other USB devices, such as a keyboard.

- Be sure to perform a virus check for the USB memory before connecting it to the product. SATO Corporation shall not be held responsible for any product malfunctions caused by a virus spread via USB memory.

(5) **Warning lamp connector**

This connector is for the warning lamp.

(6) **IEEE1284 connector**

Use this to connect the product to the computer using the IEEE1284 interface.

(7) **RS-232C connector**

Use this to connect the product to the computer using the RS-232C serial interface.

(8) **AC input terminal**

Supplies power to the product through the connected power cord.

Before connecting, make sure that the AC voltage of your region is in the range of AC 100 to 240 V, 50 to 60 Hz.

Internal View

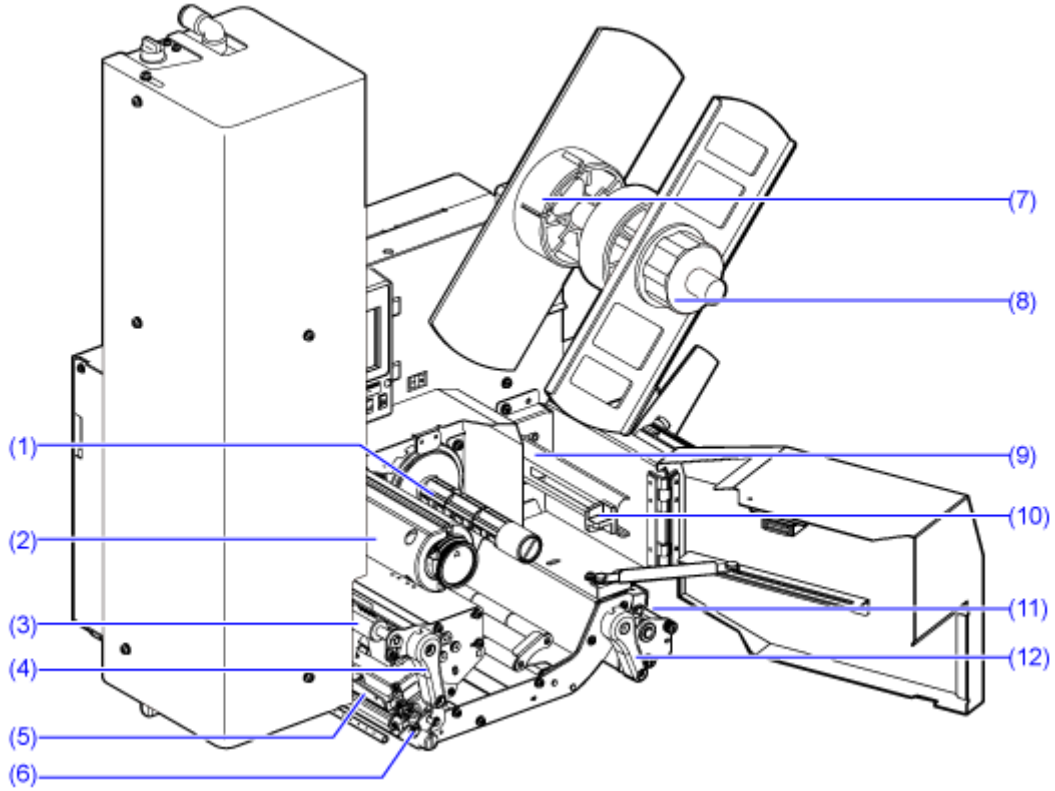

(1) **Ribbon supply spindle**

(2) **Ribbon rewind spindle**

(3) **Ribbon feed roller**

(4) **Head lock lever**

Used to release the print head assembly.

(5) **Print head (consumables)**

Creates an image directly on the media or by using a ribbon. Clean the print head regularly.

(6) **Platen roller (consumables)**

(7) **Media roll holder**

Use to hang the media roll.

(8) **Media stopper**

Stops the media roll that is hanging on the media holder.

(9) **Label damper**

(10) **Media guide**

(11) **Pressure nip roller/nip roller (consumables)**

(12) **Nip lock lever**

Parts Identification for the Operator Panel

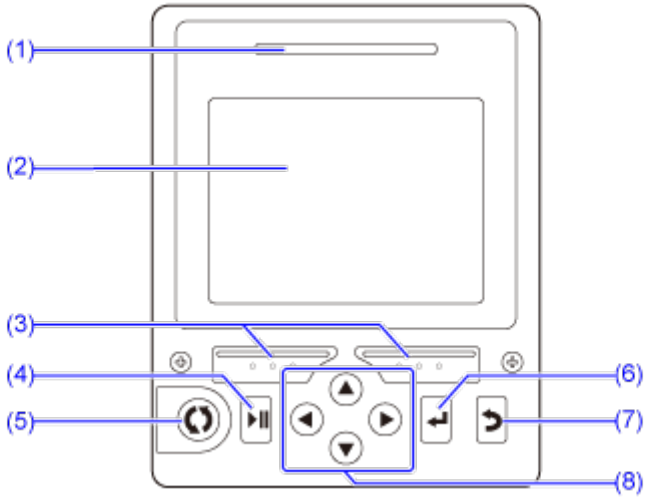

(1) **LED indicator**

(2) **Display**

(3) **Soft buttons**

The functions change depending on the screen. The functions of the buttons are indicated on the bottom of the screen.

Example 1: In Offline mode

left soft button: ONLINE, right soft button: FEED

Example 2: The numerical value input screen of the Settings menu

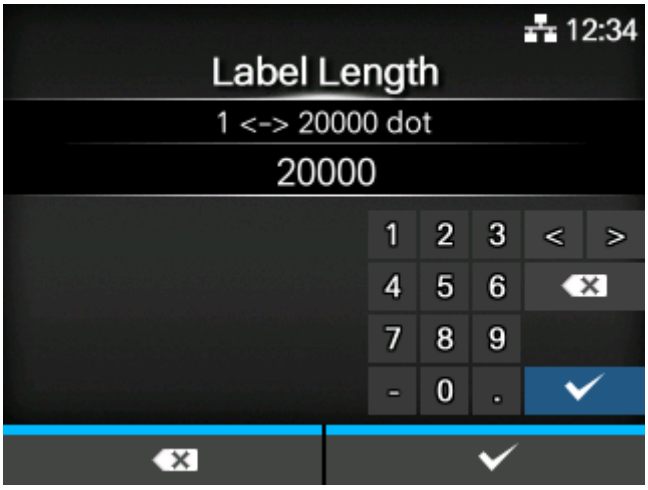

left soft button: Delete one character, right soft button: Save

(4) **Line button**

Toggle between Online/Offline mode or playback/pause the video.

(5) **Reset button**

Press this once after an error occurs to stop the warning lamp's buzzer. After removing the cause of the error, press it again to clear the error.

- If you have selected [None] in the [Applications] > [Applicator] > [Warning Lamp] > [Select Type] menu, the warning lamp's buzzer does not sound when an error occurs. After removing the cause of the error, press the reset button once to clear the error.

(6) **Enter button**

Confirm the selected item or setting value.

(7) **Back button**

Returns to the previous screen.

(8) / / / **Arrow buttons**

Navigate the selection in the screen menu.

Using the Operator Panel

Display and Operation of the Operator Panel

LED Indicator

The LED indicator lights or flashes to show the current status of the product. The LED indicator shows the following states of the product:

LED Indicator	Color	Description
	Blue	Online mode
	Blue (flashing)	When power is on
	(Light off)	Power off, Offline mode, or Settings mode
	Red	Product error (for example, when the ribbon runs out)
	Red (flashing)	Product error (for example, the product's temperature exceeds the allowable range)

Operations in Online/Offline Mode

Online Mode

In Online mode, you can execute the print job.

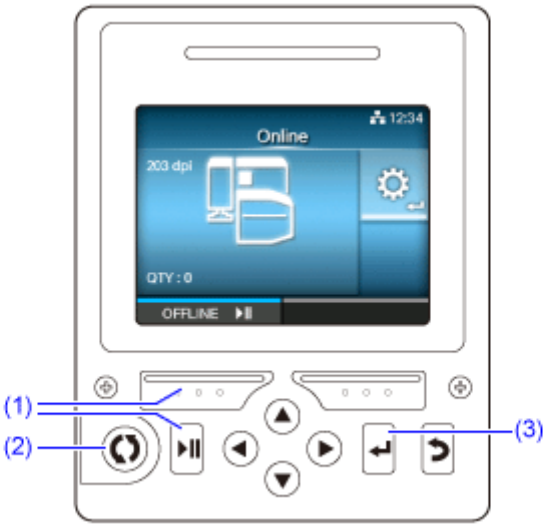

(1) Change to Offline mode.

(2) While waiting for application to start, long pressing this button for 2 seconds opens Application Test mode and application starts.

(3) Opens the Adjustments mode.

Offline Mode

In Offline mode, the print job will stop.

You can adjust the print settings, cancel the print job or feed the media.

After you complete or cancel the print job, you can show the Settings mode.

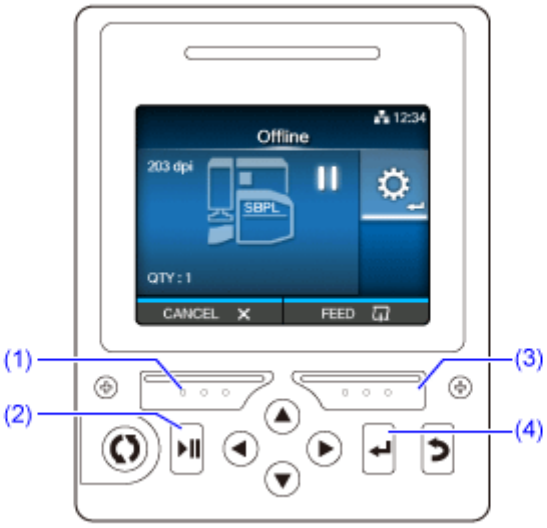

(1) Cancel the print job.

(2) Change to Online mode.

(3) Feed the media.

(4) Shows the Adjustments mode when the print job is paused.

Shows the Settings mode when there are no print jobs.

Status Icon

The icons on the status bar of the display show the product's status.

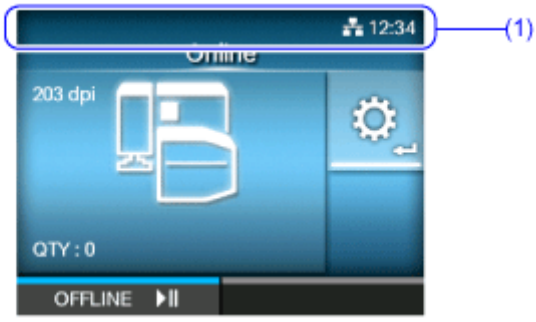

(1) Status bar

Communication Interface Status

Icon	Description
	Network link is enabled but not connected.
	Network link is enabled and connected.
	Not connected to the NTP time server.
	Standard code is disabled.
	The On-Demand mode of the SOS (SATO Online Services) is enabled.
	The Real Time mode of the SOS is enabled. The product is connected to the SOS cloud.
	The Real Time mode of the SOS is enabled, but not connected to the SOS cloud. If the LAN icon is grayed out, the product is not connected to the network. If the LAN icon is enabled, the internet connection of the SOS cloud has trouble.
	Time period set for periodic notification for On-Demand mode for SOS has been reached. Scan the QR code and send the information to the SOS cloud.

Icon	Description
	IP address could not be acquired. Or a communication error occurred.

USB Memory Status

Icon	Description
	USB memory is connected.

Barcode Scanner Status

Icon	Description
	Barcode scanner is connected in AEP mode.

Print Job Status

Icon	Description
	Ribbon is near the end. The rest of the ribbon is decreased. Prepare a new ribbon.
	Label is near the end. The rest of the media is decreased. Prepare new media.
	Command error detected. Check the print data.

Icon	Description
	Receive buffer is nearly full. Do not send print data until the buffer is no longer nearly full.
	Defective print head is detected. Replace the print head.
	Incompatible print head is detected. Replace the print head.

Maintenance Status

Icons notify you about cleaning the product and replacing parts at the set periods when [Notifications] is enabled.

Icon	Description
	Clean the print head or platen roller.
	Replace the print head.
	Replace the platen roller.

Operations When Errors Occur

When a product error occurs, an icon and message (the error and solution) for the error appear on the display. When an error occurs, you can perform the following operations:

- Change to Offline mode.
- Cancel the error.
- Feed the media.

- Change to Settings mode.
- Change to guidance video.
- Change to the SOS error screen on which the QR code and phone number are displayed if the SOS (SATO Online Services) is enabled.

- The available operations vary, depending on the situation.

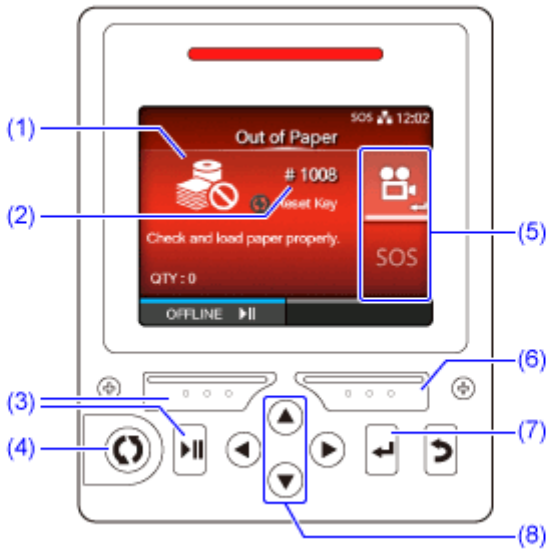

(1) Error Icon

(2) Error number

(3) Change to Offline mode if allowed for the active error.

(4) Stops the warning lamp's buzzer. After removing the cause of the error, press it again to clear the error (if the error that occurred is resolved).

- If you have selected [None] in the [Applications] > [Applicator] > [Warning Lamp] > [Select Type] menu, the warning lamp's buzzer does not sound when an error occurs. After removing the cause of the error, press the button once to clear the error.

(5) The icon appears when the Settings mode or guidance video is available.

The SOS icon appears when the SOS is enabled.

(6) Feed the media if allowed for the active error.

(7) Change to Settings mode or guidance video.

Change to the SOS error screen on which the QR code and phone number are displayed if the SOS is enabled.

(8) When there are two icons on the (5) area, select the icon by using / buttons. The selected icon will be highlighted.

Error Icon

Icon	Description
	Paper end is detected.
	Ribbon end is detected.
	Print data is larger than the media size.
	Sensor error is detected.
	Print head is unlocked.
	Print head error is detected.
	• Communication error is detected. • BCC error is detected.
	Receive buffer overflow.

Icon	Description
	• USB memory is not accessible. • There is no free space in the USB memory.
	Calendar error is detected.
	• No print head installed or head resolution was changed. • Product error was detected.
	The temperature of the print head has exceeded the tolerance range.
	Label application error was detected.

Guidance Videos

The product contains guidance videos that are shown on the display for visual reference of the product's operations.

List of the Guidance Videos

The product contains guidance videos that are shown on the display for visual reference of the product's operations.

The onboard guidance videos are as follows:

No.	Guidance Videos	Show video from		
		Error screen	Startup Guide	From the [Information] menu
1	Loading media	-	Yes	Yes
2	Installing the ribbon	-	Yes	Yes
3	Replacing media	Yes	-	Yes

No.	Guidance Videos	Show video from		
		Error screen	Startup Guide	From the [Information] menu
4	Replacing the ribbon	Yes	-	Yes
5	Replacing the print head	-	-	Yes
6	Replacing the platen roller	-	-	Yes
7	Replacing the nip roller	-	-	Yes
8	Replacing the pressure nip roller	-	-	Yes
9	Cleaning the print head	-	-	Yes
10	Cleaning the platen roller	-	-	Yes
11	Cleaning the pressure nip roller	-	-	Yes
12	Cleaning the media and ribbon rollers	-	-	Yes

Playing the Guidance Video from the Error Screen

Play the guidance video from the error screen and resolve the error by following the procedure of the video.

1. The button stops the warning lamp's buzzer (if a warning lamp is connected).

2. **On the error screen, press the button to play the guidance video.**

If there are more videos to choose from, press the arrow buttons to select the guidance video, and then press the button. The guidance video appears.

3. **Follow the procedures to resolve the error according to the guidance video.**

4. **Press the button to clear the error.**

Getting Access to the Guidance Video in Online Mode

When in the Online mode, play the guidance video according to the following procedure.

1. **Press the button in Online mode.**

The product changes to Offline mode.

2. **Press the button.**

The product changes to Settings mode.

3. **Select [Information] using the / buttons.**

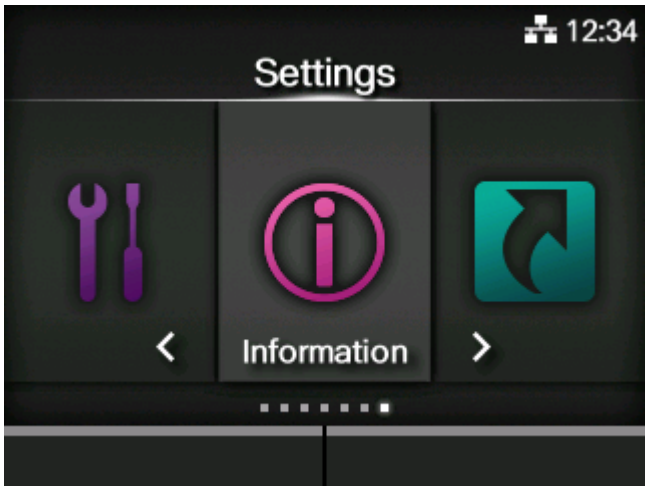

4. **Press the button.**

The item list appears.

5. **Select [Help] using the ▲/▼ buttons.**

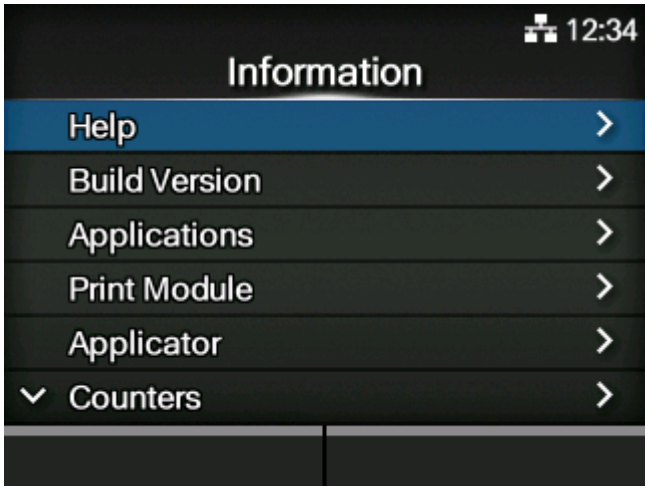

6. **Press the ↵ button.**

The guidance video list appears.

7. **Select the video for playback using the ▲/▼ buttons, and then press the ↵ button.**

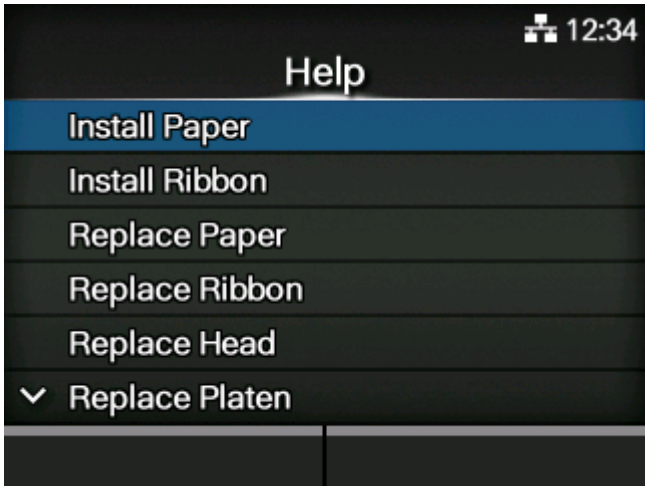

The guidance video starts.

Operating the Guidance Video

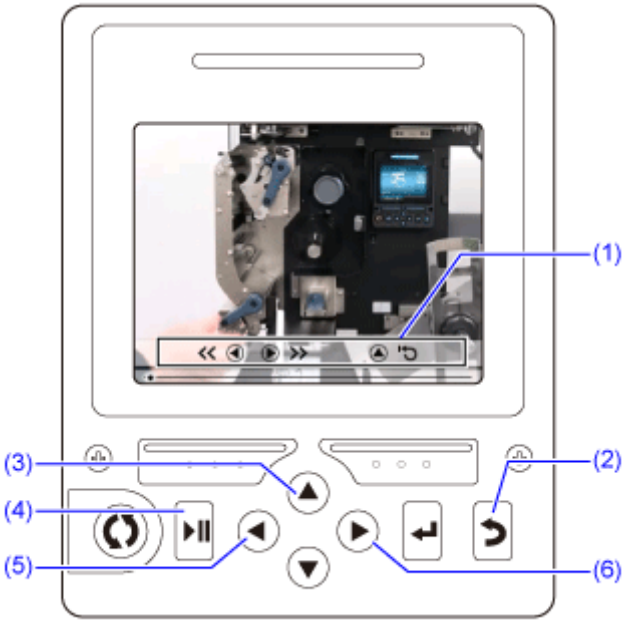

(1) Indication panel appears again when one of the buttons is pressed.

(2) Stop the playback of the video and return to menu.

(3) Playback the video from the start.

(4) Playback or pause the video.

(5) Rewind the video.

(6) Fast-forward the video.

Canceling the Print Job

Cancel the print job according to the following procedure. When the print job is canceled, the data stored in the receive buffer of the product is also deleted.

1. Press the button to change the product to Offline mode.

2. Press the button.

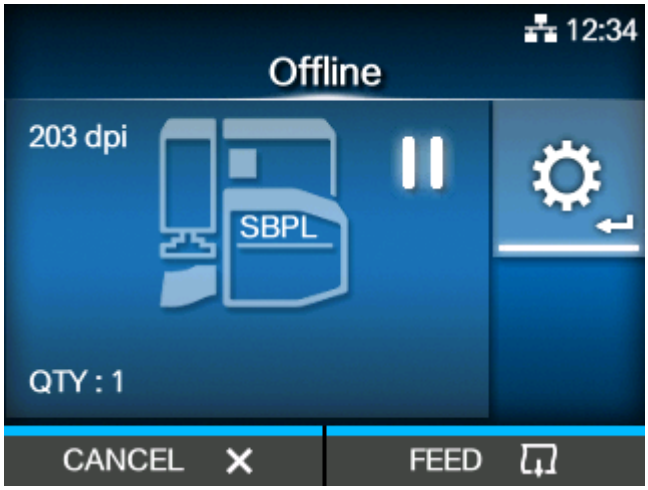

A message appears, confirming that you want to cancel the print job.

3. Press the button.

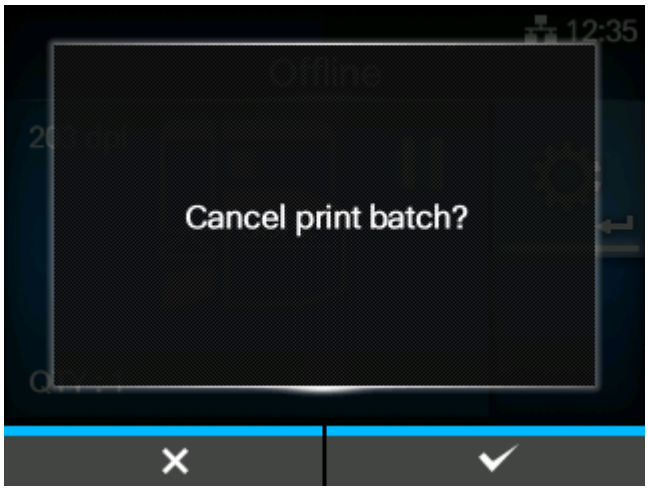

The print job is canceled.

Adjustments Mode

Adjusting the Settings Using Adjustments Mode during Printing

Follow the procedure below to adjust the offset position, print position, and print darkness during printing.

1. **Press the button while printing (in Online mode).**

- You can also press the button to pause printing and switch the product to Offline mode while printing, and then press the button to open Adjustments mode.

The Adjustments mode appears.

2. **Select an item and adjust the setting.**

3. **Press the button to return to Online mode.**

- Press the button to change to Online mode if you have opened Adjustments mode after opening Offline mode.

The print job resumes with the adjusted settings.

- When [Commands] is set in [Advanced] > [Prioritize] on the [Printing] menu and the print settings have been specified by command, the changes made in the Adjustments mode will be applied only to the data already analyzed at that time. The settings specified by command will be applied to the rest of the data.

How to Use [Port Monitor]

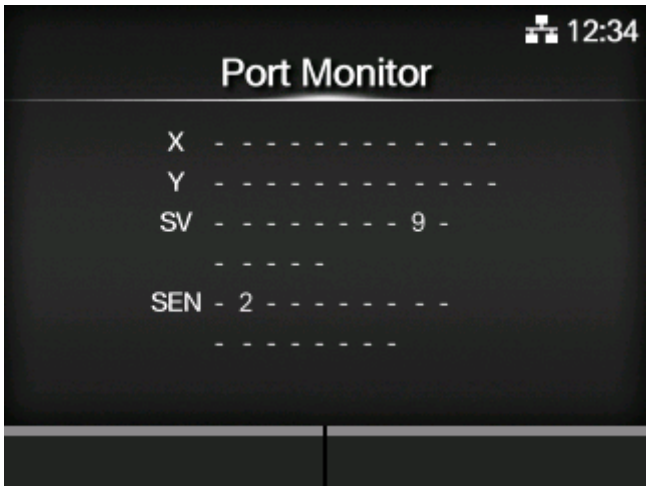

Press the button while printing (in Online mode) to display the Adjustments mode where you can check [Port Monitor]. It shows the state of solenoids, applicator sensors, and external signals.

The positions that are on are shown on the screen.

Only signals that are on for at least one second are shown.

The displayed items are as follows:

X1 to X8

External input signals

X9 to X12

Reserved

Y1 to Y8

External output signals

Y9 to Y12

Reserved

SV1 to 3

Reserved

SV4

Application cylinder SV

SV5

Blowing SV

SV6

Suction 1 SV

SV7

Suction 2 SV

SV8

Assist nozzle SV

SV9

Application cylinder double solenoid

SV10 to SV15

Reserved

SEN1

Suction sensor

SEN2

Cylinder backward end sensor

SEN3

Cylinder forward end sensor

SEN4

Pressing confirmation sensor

SEN5 to 18

Reserved

- SV indicates a solenoid valve.

Settings Mode

In the Settings mode, you can set the product's various settings. The topics here explain how to operate the Settings mode.

Settings Mode Menus

There are six main menus in the Settings mode and each menu contains many layers of submenus. Frequently used settings are also listed in the [Shortcut] menu so that you can directly access them.

Menu	Description
Shortcut Menu	Directly access frequently used settings.
Printing Menu	Access the settings related to printing.
Interface Menu	Access the settings related to the interfaces.
Applications Menu	Access the settings related to application process and the product's commands.
System Menu	Access the settings related to the display language, buzzer volume etc.
Tools Menu	Access the test print, initialization and other settings.
Information Menu	Displays the information and guidance videos for the product.

- The icon appears between the [Information] menu and [Shortcut] menu when the [System] > [Regional] > [Display Language Icon] menu is enabled. You can easily access the [Language] menu.

Changing to the Settings Mode

The Settings mode appears when no print jobs remain in the product.

Change the product to the Settings mode according to the following procedure:

1. **Press the button in Online mode.**

The product changes to Offline mode.

2. **Press the button.**

The product changes to Settings mode.

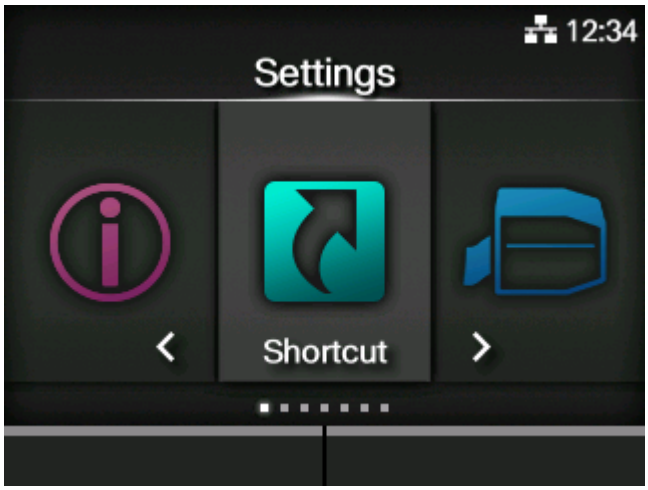

- To exit the Settings mode, press the button.

Logging In to/Logging Out of the Settings Mode

The Settings mode logs in and logs out by the following procedure, if the password is enabled.

- **If the password is enabled, input the password after entering the Settings mode.**

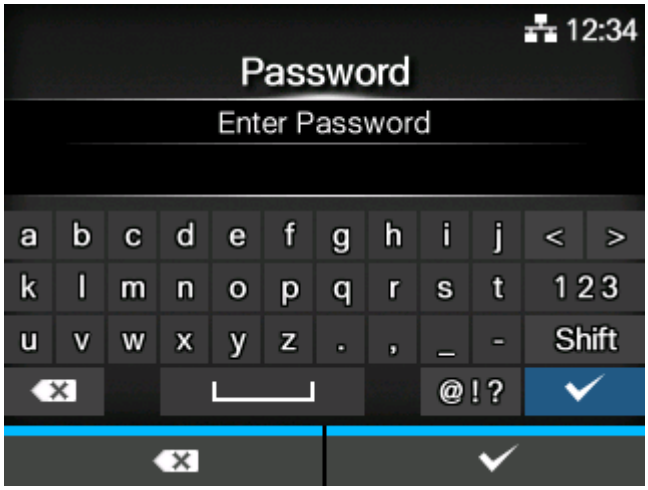

When logged in to the Settings mode, [LOG OUT] appears on the bottom left of the screen.

- **Press the button to log out of the Settings mode.**

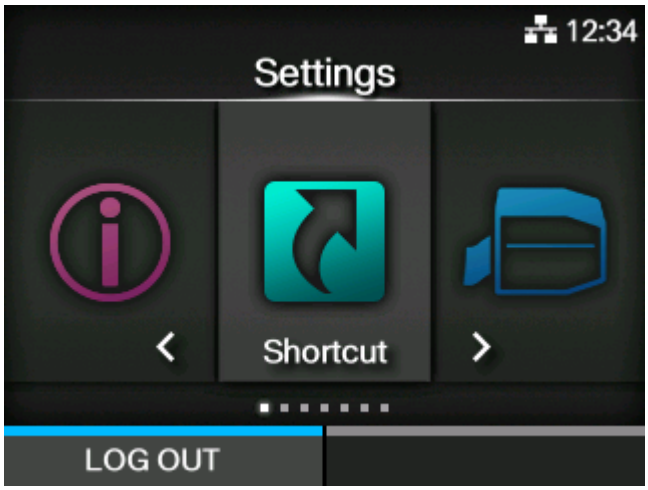

Password is required to enter the Settings mode again.

- With password enabled, if no button is pressed for about 10 minutes after login, the login session will end automatically. Password is required to enter the Settings mode again.

Item Selection

Select an item in Settings mode according to the following procedure:

1. **Select menu using the ◀/▶ buttons.**

2. **Press the ↵ button.**

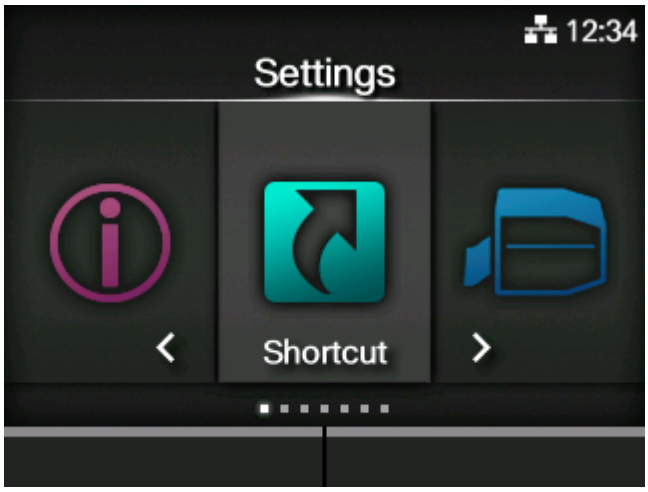

The item list appears.

3. **Select an item using the ▲/▼ buttons.**

4. **Press the ↵ button.**

If the selected item is a setting item, the setting screen appears.

If the selected item is a handling item such as the auto calibration, copy, or delete, the starting screen or confirmation screen appears.

Items with a [>] indicated on the right side have more items in the next layer of the submenu.

Press the ▶ or ↵ button to show the next layer.

Similarly, select an item using the ▲/▼ and ↵ buttons.

Press the ↩ button to return to the previous screen.

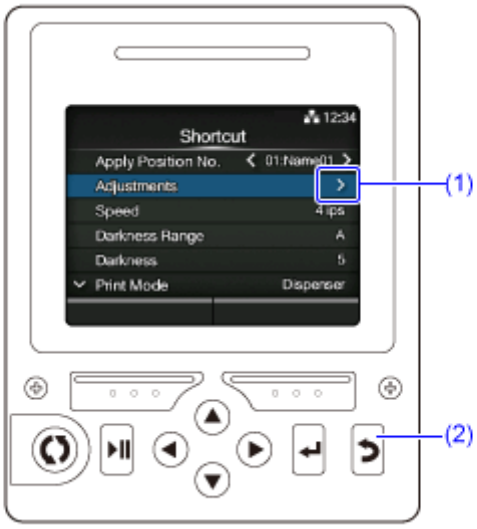

(1) There are more items in the next layer.

(2) Return to the previous screen.

Setting Value Input or Selection

This topic describes the character and number input on the setting screen and how to select an item from the list.

- You can also input characters and numbers from a USB keyboard by connecting it to the product.

- Character Input
- Numeric Input
- Selection from the List
- Selection from the Box
- IP Address Input

- **Character Input**

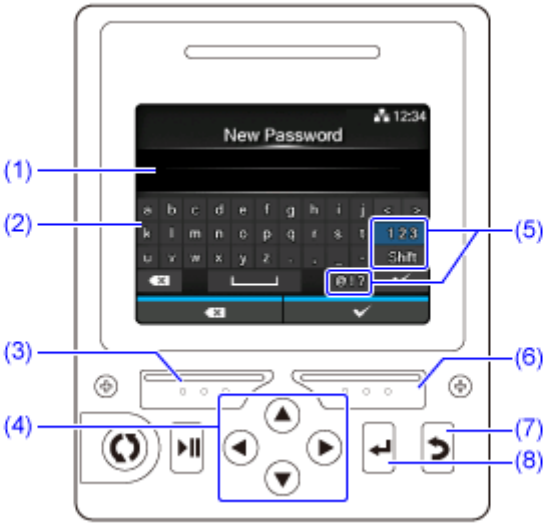

(1) Text box

(2) Selection area

(3) Delete the character displayed to the left of the cursor in the text box.

(4) Select the character for input using the arrow buttons. The selected character will be highlighted in the selection area.

(5) Change the input mode.

(6) Save the character you enter in the text box and return to the item list.

(7) Cancel the character you enter in the text box and return to the item list.

(8) Enter the selected character into the text box.

- **Numeric Input**

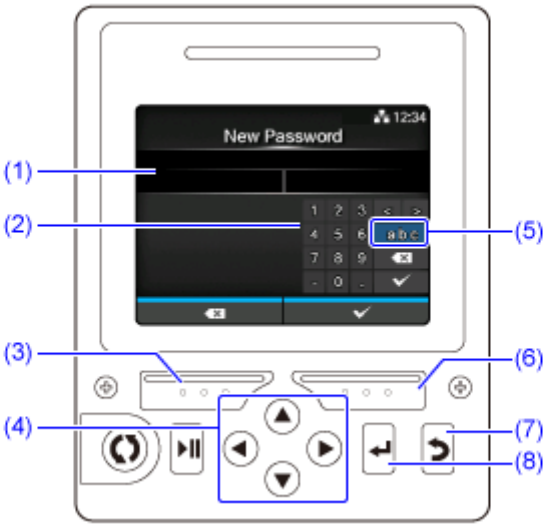

(1) Text box

(2) Selection area

(3) Delete the character displayed to the left of the cursor in the text box.

(4) Select the number for input using the arrow buttons. The selected number will be highlighted in the selection area.

(5) Change the input mode.

(6) Save the number you enter in the text box and return to the item list.

(7) Cancel the number you enter in the text box and return to the item list.

(8) Enter the selected number into the text box.

- **Selection from the List**

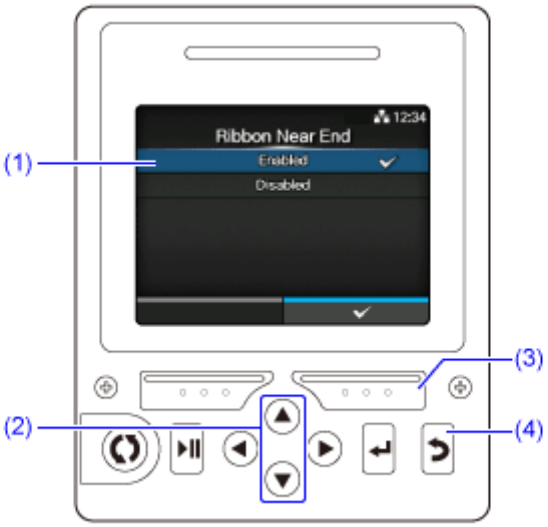

(1) Selection area

(2) Select an item using the ▲ / ▼ buttons. The selected item will be highlighted in the selection area.

(3) Save the selection from the list and return to the item list.

(4) Cancel the selection from the list and return to the item list.

- **Selection from the Box**

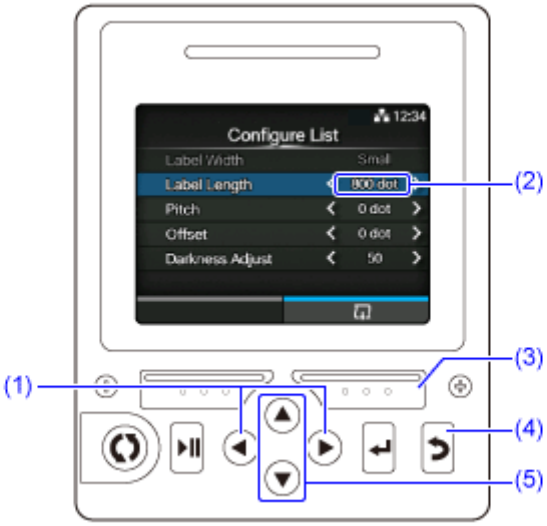

(1) Change the value in the selection box using the ◀/▶ buttons.

(2) Selection box

(3) Perform the function as shown on the screen above.

(4) Return to the previous screen.

(5) Select an item using the ▲/▼ buttons. The selected item will be highlighted in the selection area.

- **IP Address Input**

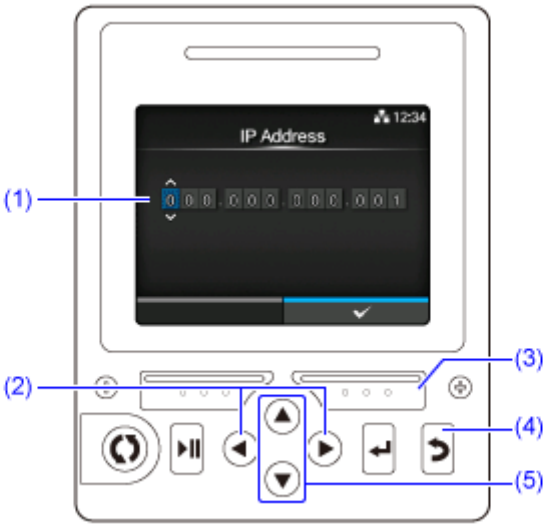

(1) Text box

(2) Select the digit for input using the ◀/▶ buttons.

(3) Save the IP address you enter in the text box and return to the item list.

(4) Cancel the IP address you enter in the text box and return to the item list.

(5) Select the number to input using the ▲ / ▼ buttons.

Product Memory and USB Memory

The memory of the user area of the product is a maximum of 619 MB.

However, you cannot use the whole memory of the user area, because this area is also used for the log data and HEX dump functions.

USB memory can be connected to the product. There is no capacity limit for USB memory.

USB memory can be connected to the USB connector (type A) on the back of the product.

What you can do with the product while it is connected to USB memory is as follows:

- Get the HEX dump data
- Save receive buffer data
- Save the log files of the applicator
- Install certificates used for HTTPS
- Create clone data (copy the product's settings information)
- Get the support information

- Be sure to perform a virus check for the USB memory before connecting it to the product. SATO Corporation shall not be held responsible for any product malfunctions caused by a virus spread via USB memory.

- The product does not support USB memory with security functions such as fingerprint authentications.
- The product does not support connection through the USB HUB.

Getting Started

Connecting the Air, Warning Lamp, and Power Cord

- Disconnect the power cord from the AC outlet before you begin connecting compressed air or warning lamps.
- Do not touch the power switch, or connect or disconnect the power cord while your hands are wet. Doing so could cause an electric shock.
- Always connect the ground wire to a ground terminal. Electric shock could occur if you do not.
- Make sure that the AC voltage of your region is in the range of AC 100 - 240 V, 50 - 60 Hz. If your local voltage is not in the stated range, contact your SATO reseller or technical support center.

1. Connect the air to the air supply inlet (1) on the air regulator.

Adjust the pressure adjustment knob (2) so the pressure on the pressure meter's scale is between 0.45 and 0.5.

To adjust the pressure, pull the pressure adjustment knob up and then turn it to the right or left.

- Turn to the right to raise the pressure
- Turn to the left to lower the pressure

After doing the adjustments, press the knob in to lock it.

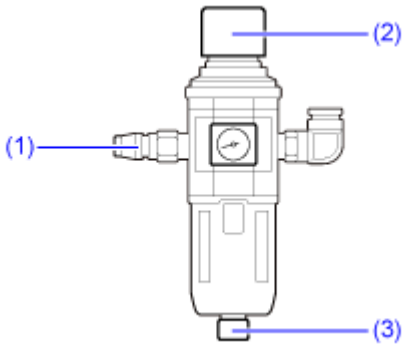

- If water collects inside, turn the water drain (3) to the left to drain the water. After draining the water, turn it to the right, back to its original position.

2. **Connect the warning lamp (6) to the warning lamp connector (4).**

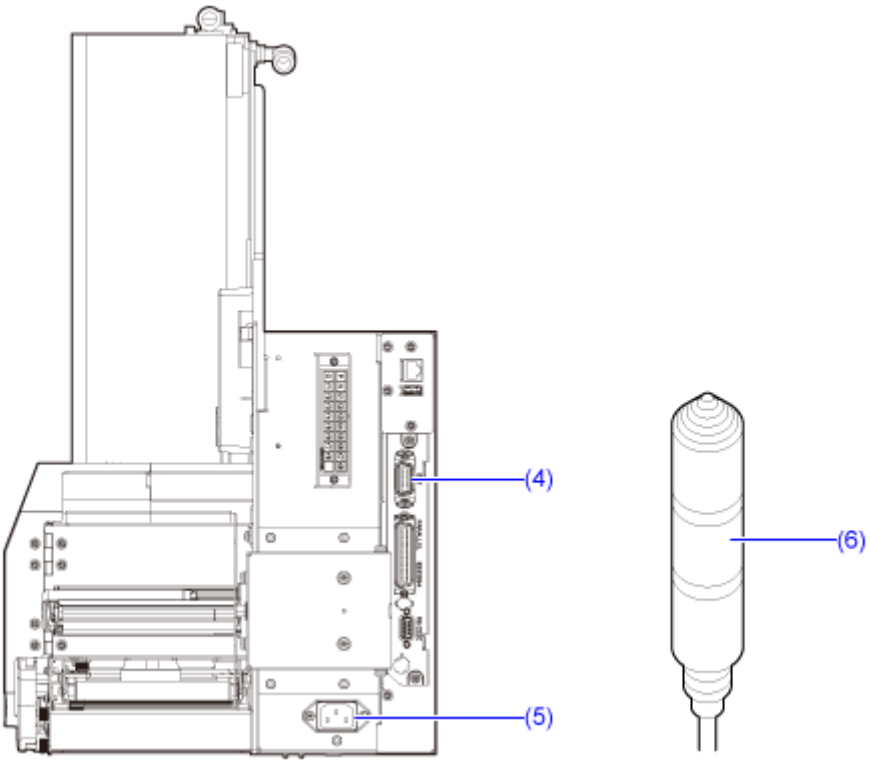

3. **Connect the power cord to the AC input terminal (5).**

   Attach the provided AC power cord clamp to the product to secure the AC power cord and prevent it from being pulled out.

4. **Insert the power plug into an AC outlet.**

- This product is also designed for IT power distribution system with phase-to-phase voltage 230 V.

Connecting to External Devices

You can operate the product by connecting the product to external devices by using the external input/output signal terminals.

Powering On/Off the Product

Powering On the Product

- Do not touch the power switch, or connect or disconnect the power cord while your hands are wet. Doing so could cause an electric shock.

1. **Turn on the power switch to power on the product.**

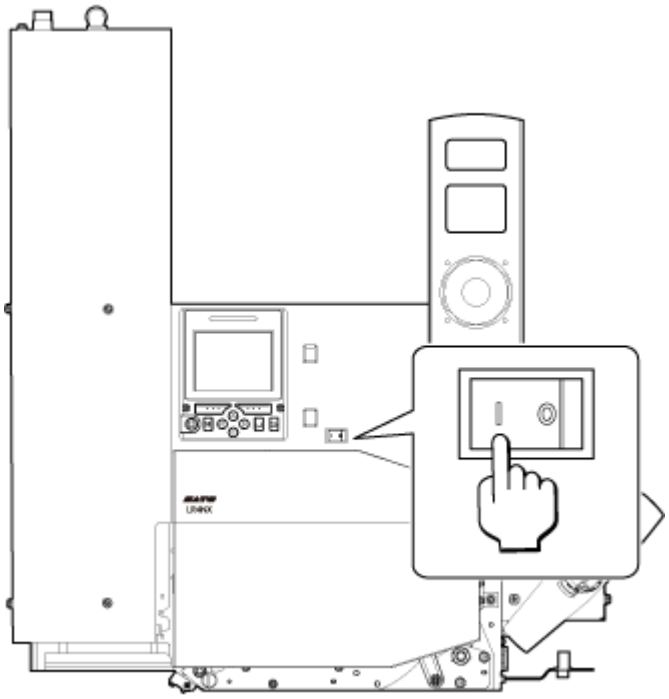

The LED indicator lights blue, and then "Online" appears on the display.

Powering Off the Product

- Do not touch the power switch, or connect or disconnect the power cord while your hands are wet. Doing so could cause an electric shock.

- Do not power off the product during operation, such as when printing or updating. Doing so could cause a malfunction of the product.
- An incorrect power on/off operation may change or initialize the product's settings. It is always recommended to use the power switch to allow proper shutdown of the product and ensure changes made to menu settings are saved appropriately.

1. Confirm that the product is not operating, and then turn off the power switch.

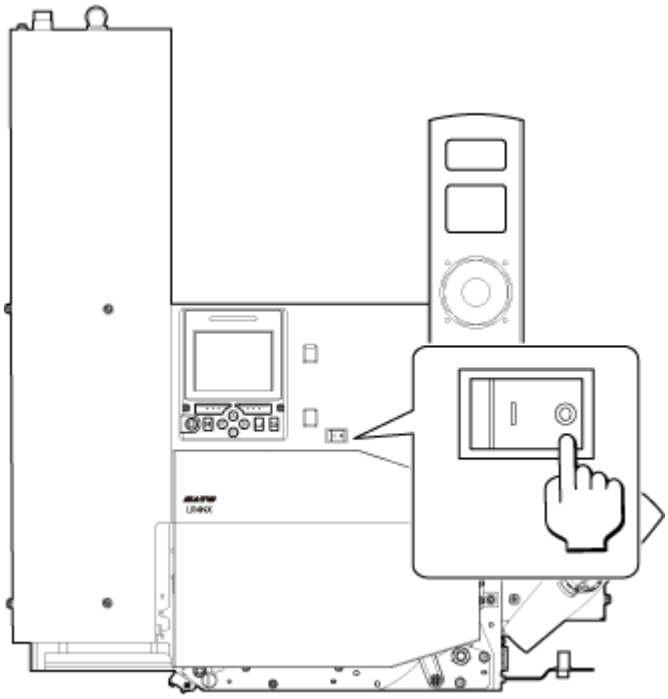

The power to the product turns off.

Loading Media and Ribbon

Media, Ribbon and Print Methods

The product supports two types of print methods, thermal transfer and direct thermal.

The media or ribbon to be used varies depending on the print method.

Thermal transfer

Print using a ribbon.

Direct thermal

Prints using direct thermal media.

- Ribbon is not necessary if you are using direct thermal media.

Loading Media

The topics here explain how to load the media.

Usable Media

The product can print on a media roll.

The product uses media sensors to detect I-marks or gaps on the media in order to precisely print the content.

I-mark label	Gap label
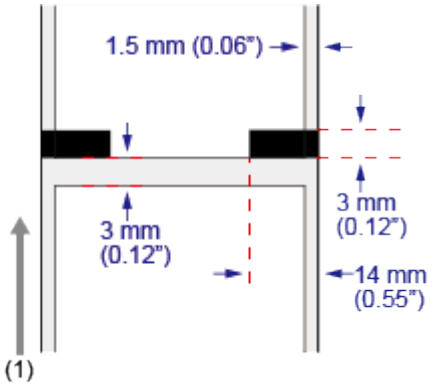	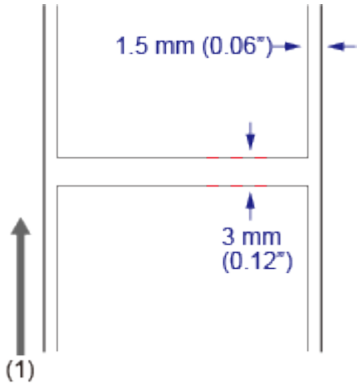

(1) Feed direction

Precautions for Loading the Media

Use merchandise from our specified suppliers on the product, for optimum print quality.

- The print head and its surroundings are hot after printing. Be careful not to touch it, to avoid being burned.
- Touching the edge of the print head with your bare hand could cause injury.

Loading the Media Roll

- The routing path of the media is shown in the below picture.

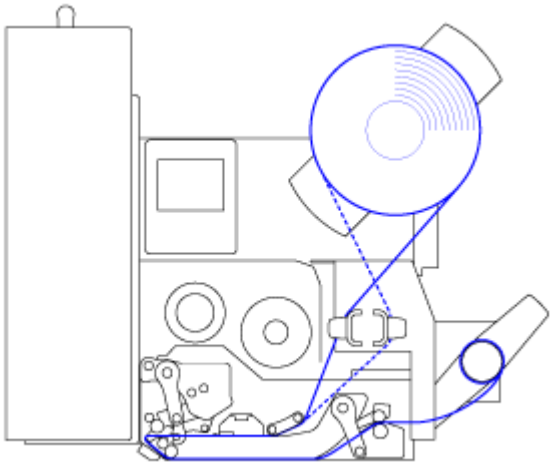

Face-in media (print side inward)

Face-out media (print side outward)

- You can also check the path of the media on the sticker on the inner side of the front cover.
- The button stops the warning lamp's buzzer (if a warning lamp is connected).

1. **Open the front cover (1).**

- Open the front cover fully to its limit.

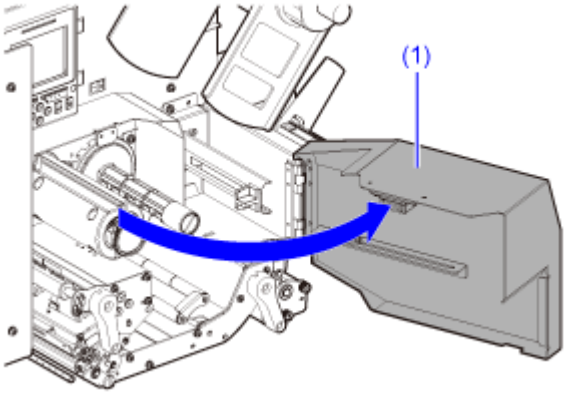

2. Open the head lock lever (2) and the nip lock lever (3).

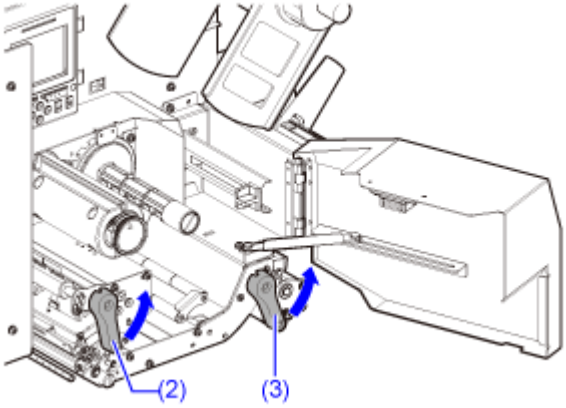

3. Pull the media stopper (4) toward you and off, load the media (5), and then secure the media stopper.

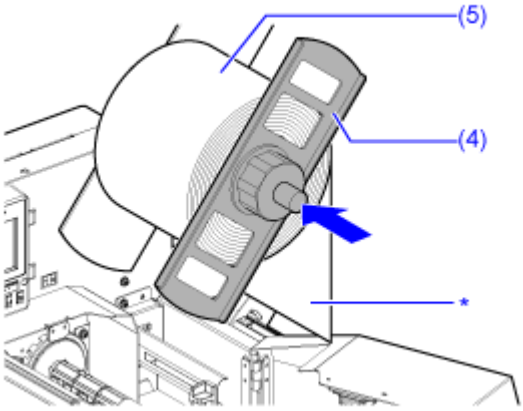

* Print side

- The diagram shows face-in media. Face-out media is loaded in the opposite orientation.

- Make sure that the media roll is inserted all the way in.

4. **Removes the multiple labels from the end of the liner.**
5. **Pass the media through the inside of the label damper (6).**

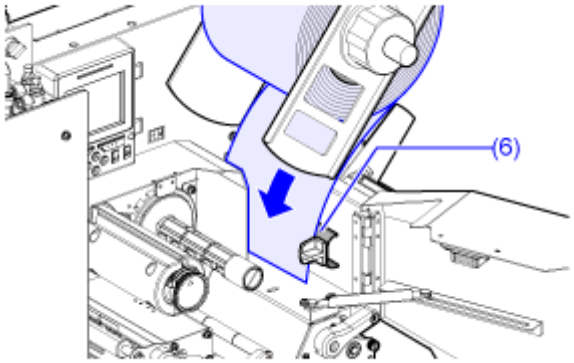

6. **Pass the media below the 2 shafts of the guide roller (7) and the media sensor guide (8).**

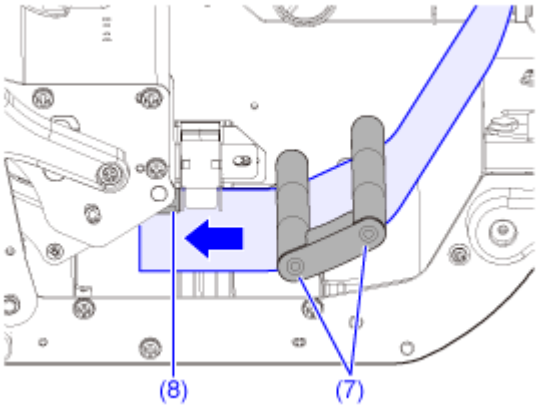

7. **Pass the media under the print head (9) and pass just the liner in front of the assist blow nozzle (10).**

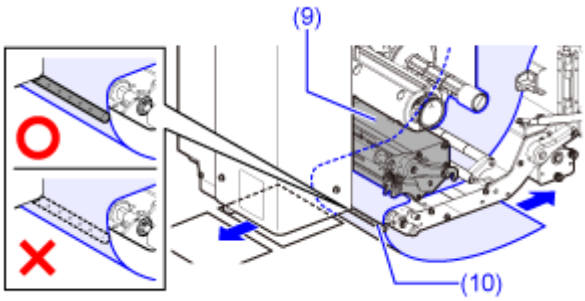

- Do not pass the liner above the assist blow nozzle.

8. **Confirm that the paper guide (11) is the same width as the media.**

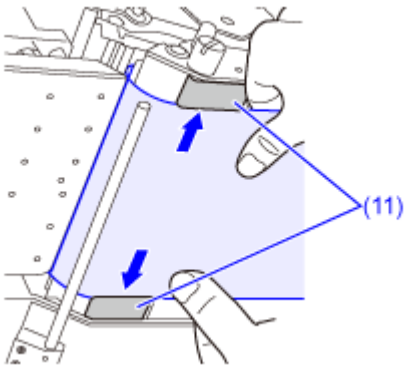

9. **Pass only the liner between the nip roller and the pressure nip roller (12).**

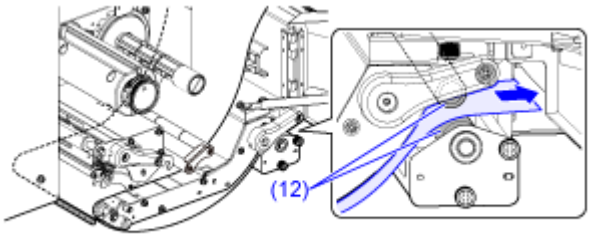

10. **Confirm that the clip for the liner winder (13) is pressed all the way in and clamp the liner with the tabs (14) on both sides.**

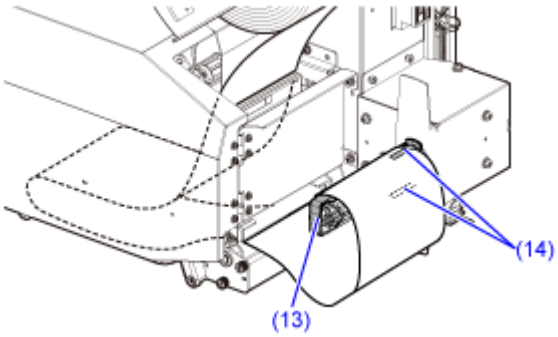

11. **Rotate the liner winder (15) by hand in the direction of the arrow, to wind the liner.**

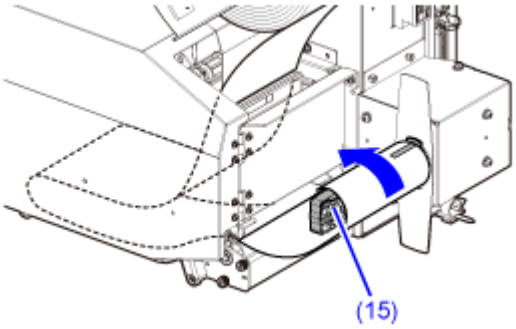

12. Close the head lock lever (2) and the nip lock lever (3).

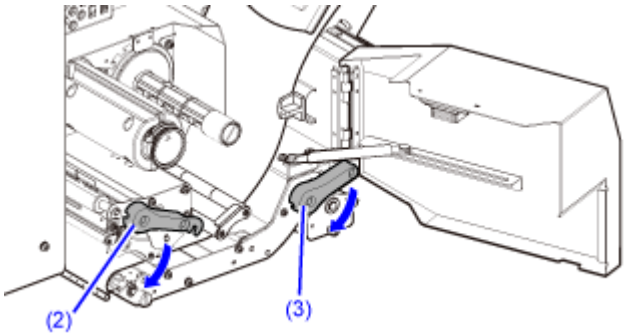

13. Align the media guide (16) to the width of the media.

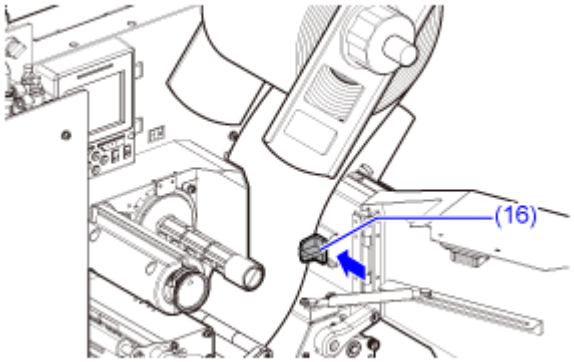

14. Close the front cover (1).

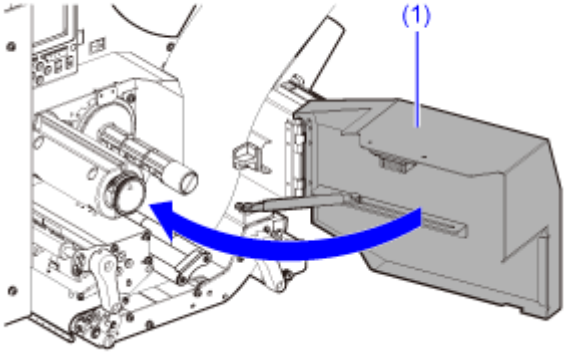

- When closing the front cover, be careful not to pinch your fingers.

15. Press the button in Offline mode to feed media.

16. If there is a product error, press the button to clear the error.

17. Press the button to change to Online mode.

18. Do a print operation to confirm that the media is loaded correctly.

- You need to load the ribbon when printing using thermal transfer.

Replacing the Media Roll

You can replace it while the power is on, if printing is being done.

- The routing path of the media is shown in the below picture.

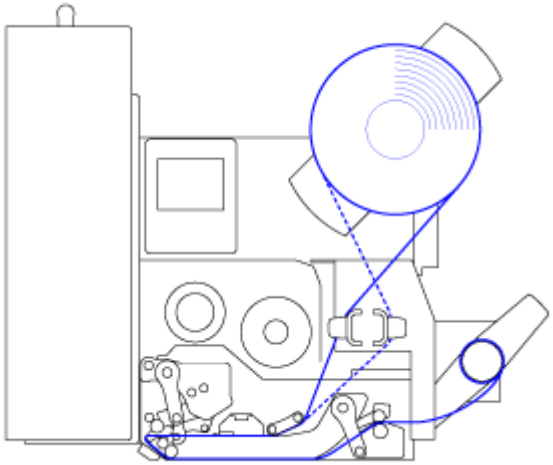

Face-in media (print side inward)

Face-out media (print side outward)

- You can also check the path of the media on the sticker on the inner side of the front cover.
- The button stops the warning lamp's buzzer (if a warning lamp is connected).
- After an out of paper error (1008) occurs, press the button to clear the error before outputting labels again.

1. Open the front cover (1).

- Open the front cover fully to its limit.

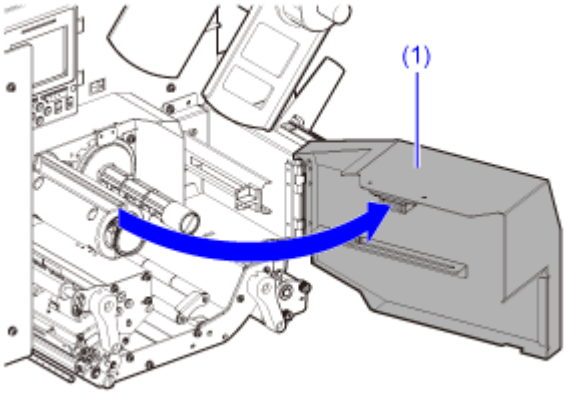

2. Open the head lock lever (2) and the nip lock lever (3).

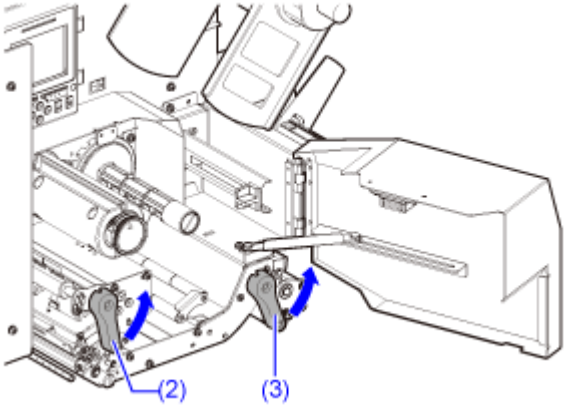

3. Pull the clip (4) on the liner winder and remove the used liner (5).

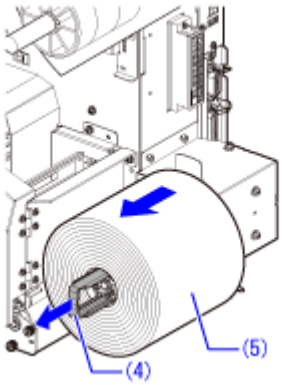

4. Remove the used media roll core (6) from the label supply boss (7).

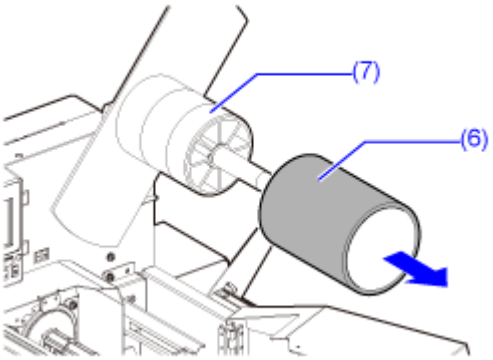

5. Load the new media (8), and then secure the media stopper (9).

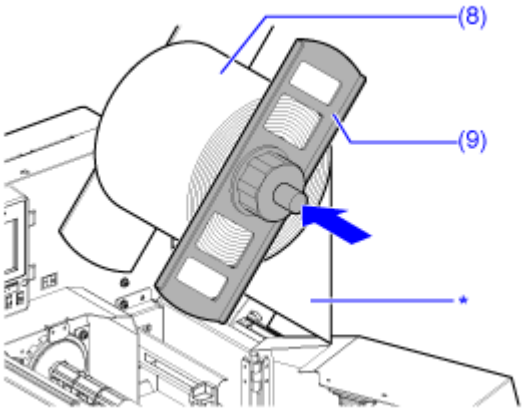

* Print side

- The diagram shows face-in media. Face-out media is loaded in the opposite orientation.
- Make sure that the media roll is inserted all the way in.

6. Removes the multiple labels from the end of the liner.

7. Pass the media through the inside of the label damper (10).

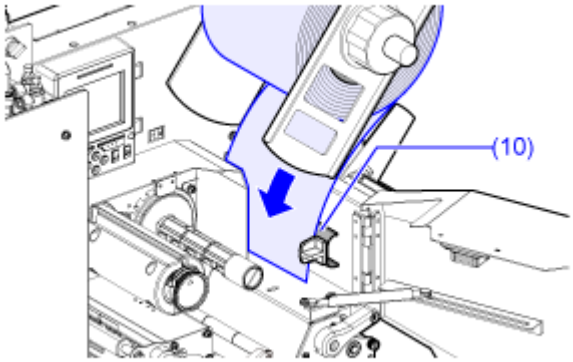

8. **Pass the media below the 2 shafts of the guide roller (11) and the media sensor guide (12).**

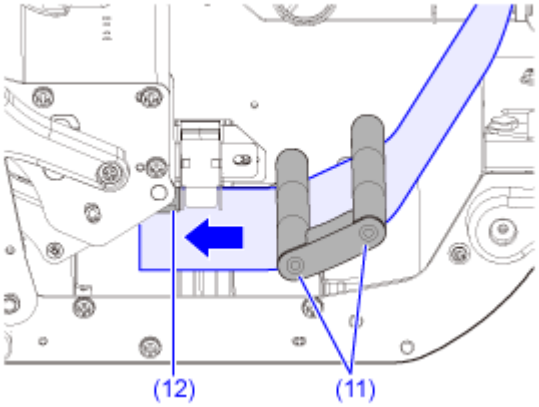

9. **Pass the media under the print head (13) and pass just the liner in front of the assist blow nozzle (14).**

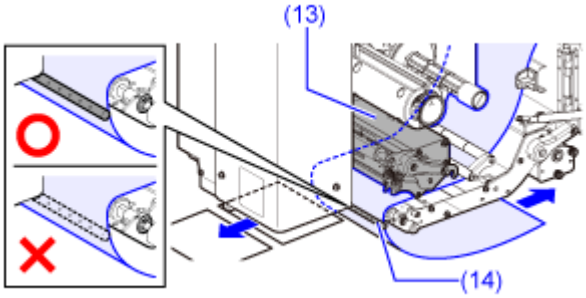

- Do not pass the liner above the assist blow nozzle.

10. **Confirm that the paper guide (15) is the same width as the media.**

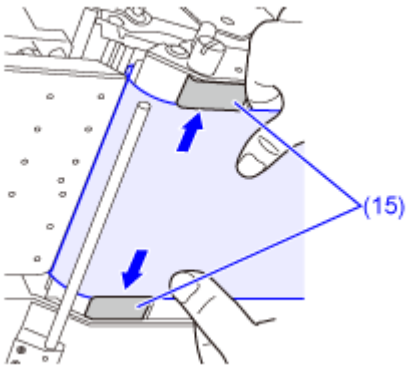

11. Pass only the liner between the nip roller and the pressure nip roller (16).

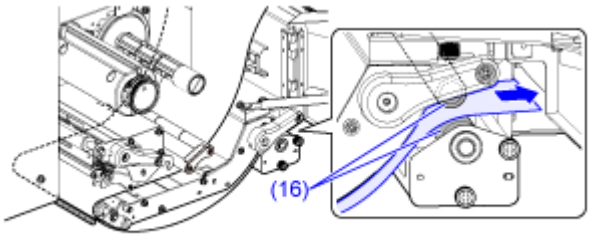

12. Confirm that the clip for the liner winder (17) is pressed all the way in and clamp the liner with the tabs (18) on both sides.

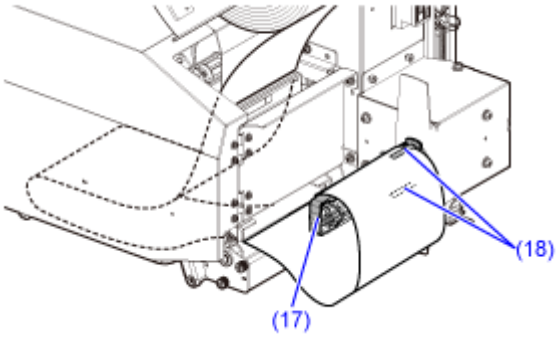

13. Rotate the liner winder (19) by hand in the direction of the arrow, to wind the liner.

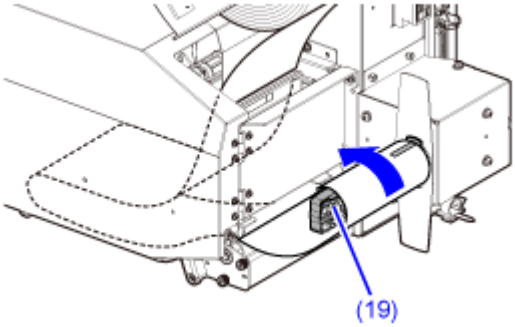

14. Close the head lock lever (2) and the nip lock lever (3).

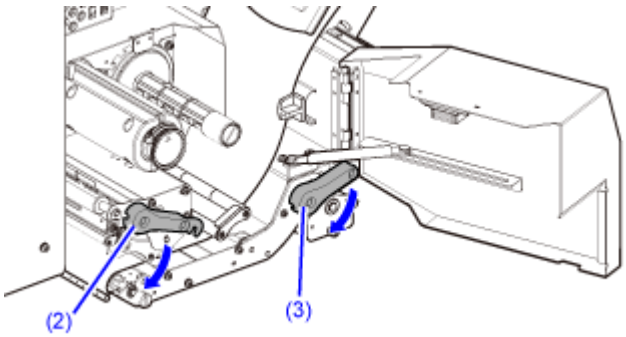

15. Align the media guide (20) to the width of the media.

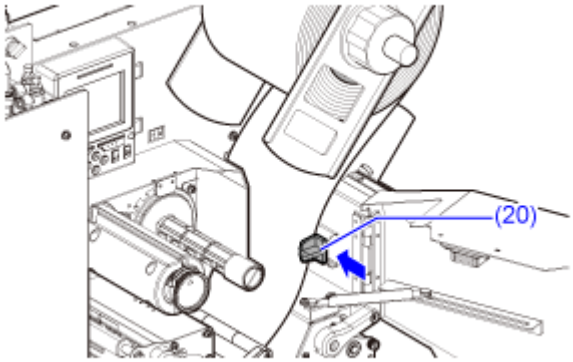

16. Close the front cover (1).

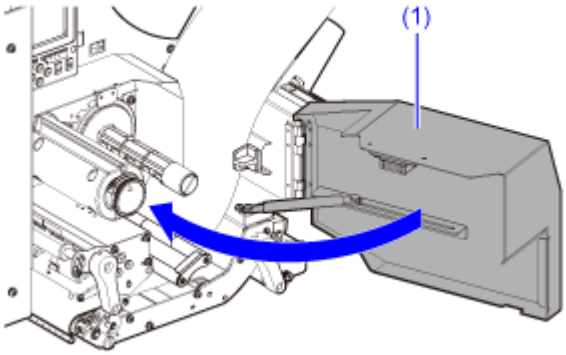

- When closing the front cover, be careful not to pinch your fingers.

17. Press the button in Offline mode to feed media.

18. If there is a product error, press the button to clear the error.

19. Press the button to change to Online mode.

20. Do a print operation to confirm that the media is loaded correctly.

- If you replaced the media while printing was stopped, printing starts again automatically when the system goes back online.

Removing the Liner from the Rewinder

- The rewinder can take up maximum a diameter of 160 mm (6.3") of liner.

1. **Confirm that the liner (1) has been cut, pull the clip (2) towards you, and pull out the liner (1).**

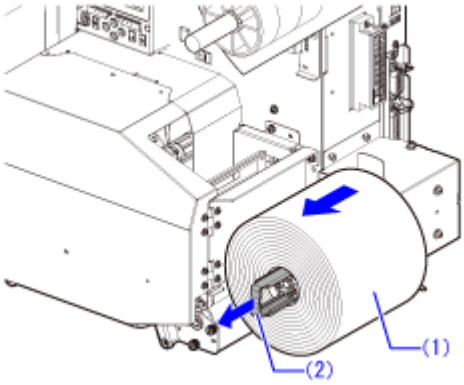

2. **Place the clip back to its original position.**

Loading Ribbon

You need to load the ribbon when printing using thermal transfer. The topics here explain how to load and replace the ribbon.

Checking the Ink Side of the Ribbon

There are two wind directions for the ribbon. Face-out means the ink is on the outer side and Face-in means the ink is on the inner side. The product supports both winding directions. You can examine the ink side of the ribbon using the following procedure.

1. **Place the outer side of the ribbon onto the media (touching).**

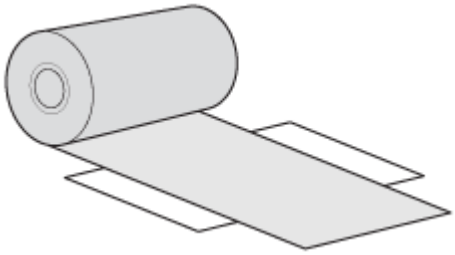

2. **Scratch the inner side of the ribbon with your fingernail or a pointed object.**

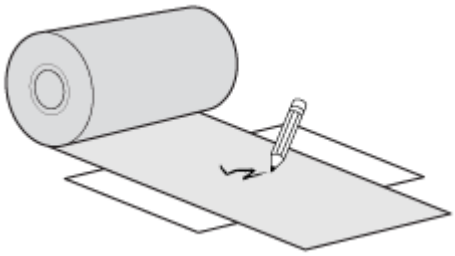

If there is a mark on the media, the ink is coated on the outer side of the ribbon.

- The ink is coated on the outer side. (Face-out ribbon)

- The ink is coated on the inner side. (Face-in ribbon)

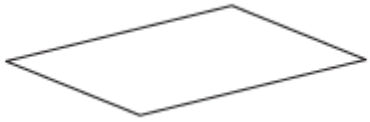

Loading the Ribbon

- The print head and its surroundings are hot after printing. Be careful not to touch it, to avoid being burned.
- Touching the edge of the print head with your bare hand could cause injury.

- Use merchandise from our specified suppliers on the product, for optimum print quality.
- The routing path of the ribbon is shown in the below picture.

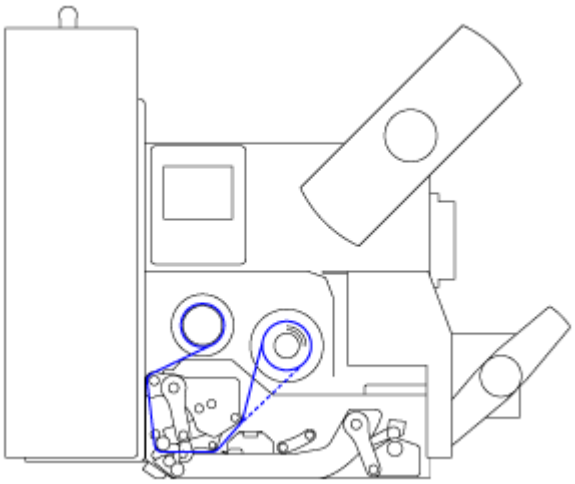

Face-in ribbon

Face-out ribbon

- You can also check the path of the ribbon on the route sticker on the inner side of the front cover.
- The button stops the warning lamp's buzzer (if a warning lamp is connected).

1. **Open the front cover (1).**

- Open the front cover fully to its limit.

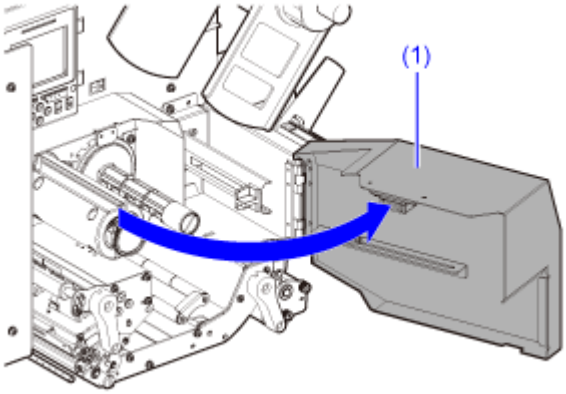

2. Confirm that the ribbon rewind spindle (2) is pressed all the way in.

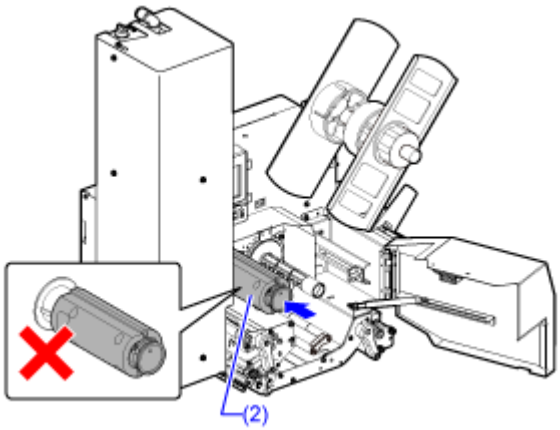

3. Open the head lock lever (3) to unlock it.

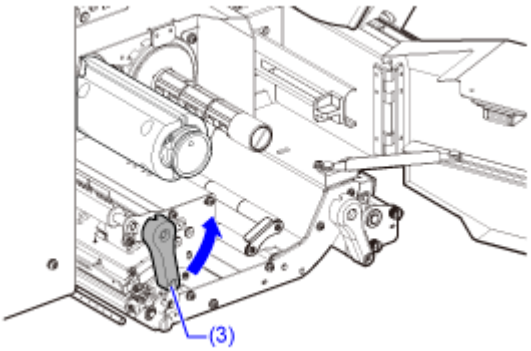

4. Load the ribbon (4) onto the ribbon supply spindle (5).

While taking note of the wind direction, insert the ribbon all the way in.

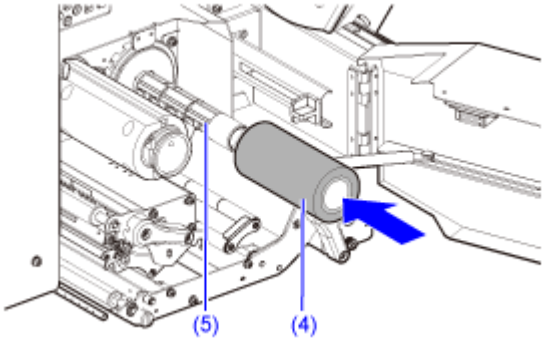

5. Pass the ribbon below the print head (6), wind the ribbon in the direction of the arrow around the ribbon rewind spindle (2) to the grip sheet (7).

Turn the ribbon rewind spindle counterclockwise for several rounds, to wind the ribbon.

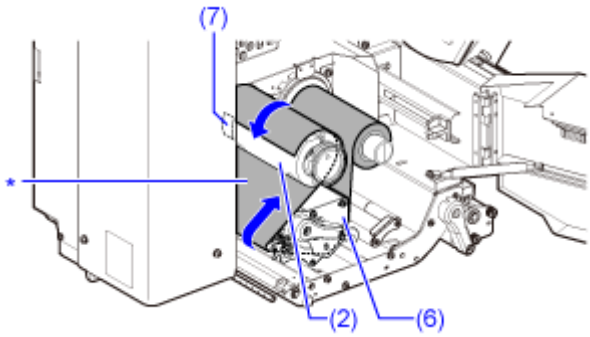

* Inked side

- The diagram shows a face-in ribbon. The face-out ribbon is loaded on the ribbon supply spindle in the opposite orientation.

6. Close the head lock lever (3).

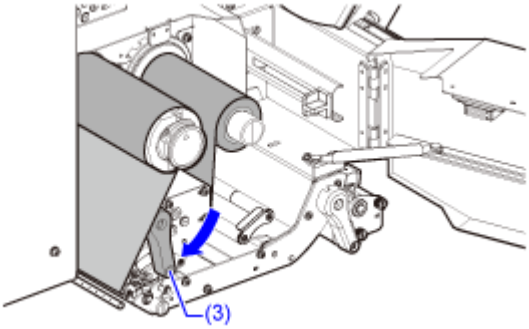

If the media is not loaded, load the media.

7. **Close the front cover (1).**

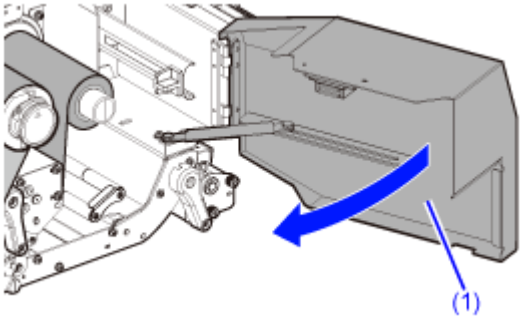

- When closing the front cover, be careful not to pinch your fingers.

8. **Press the button in Offline mode to feed media.**
9. **If there is a product error, press the button to clear the error.**
10. **Press the button to change to Online mode.**
11. **Do a print operation to confirm that the media and ribbon are loaded correctly.**

Replacing the Ribbon

- The print head and its surroundings are hot after printing. Be careful not to touch it, to avoid being burned.
- Touching the edge of the print head with your bare hand could cause injury.

- Use merchandise from our specified suppliers on the product, for optimum print quality.
- The routing path of the ribbon is shown in the below picture.

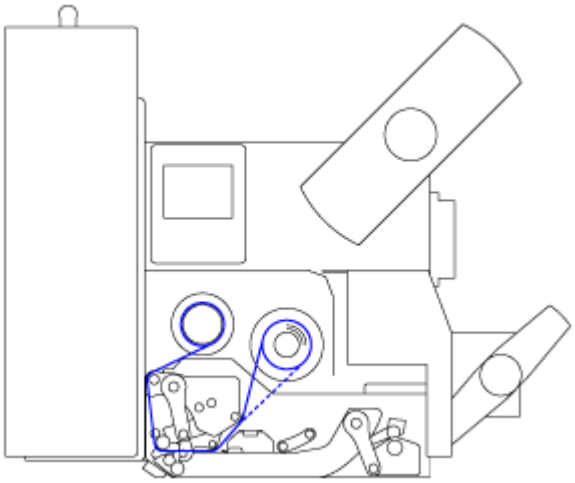

Face-in ribbon

Face-out ribbon

- You can also check the path of the ribbon on the route sticker on the inner side of the front cover.
- The button stops the warning lamp's buzzer (if a warning lamp is connected).
- After a ribbon end error (1009) occurs, press the button to clear the error before outputting labels again.

1. Open the front cover (1).

- Open the front cover fully to its limit.

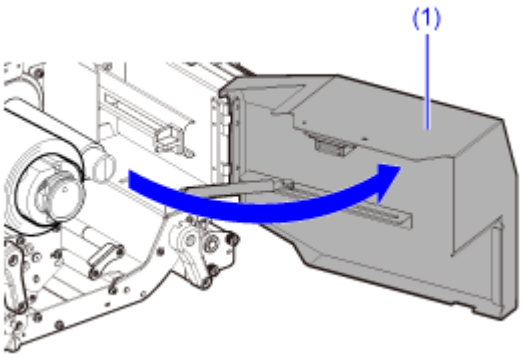

2. **Open the head lock lever (2) to unlock it.**

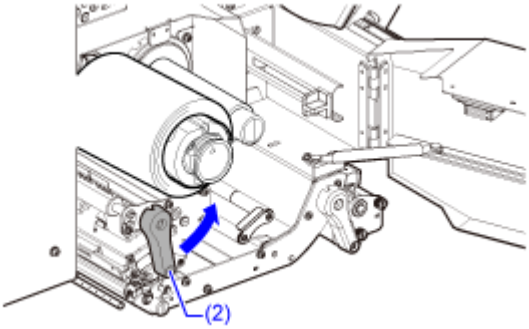

3. **Press the release button (3) on the tip of the ribbon rewind spindle to pull the ribbon rewind spindle out.**

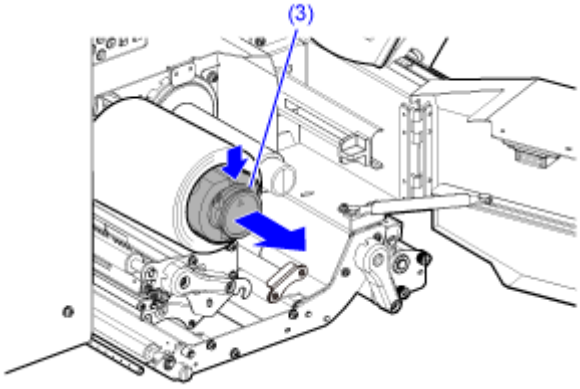

4. **Pull the used ribbon (4) off of the ribbon rewind spindle.**

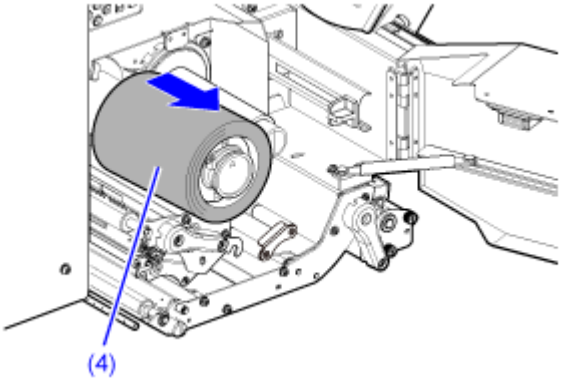

5. Push the ribbon rewind spindle (5) all the way in.

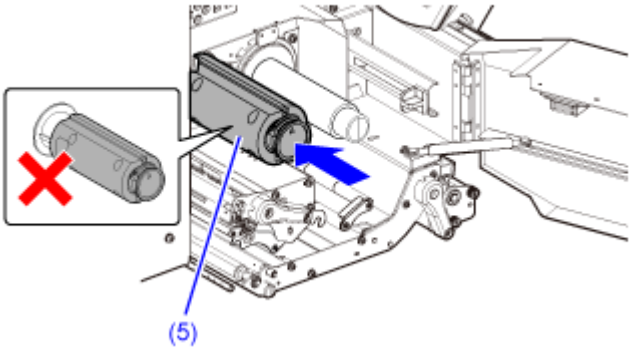

6. Extract the used ribbon core from the ribbon supply spindle (6).

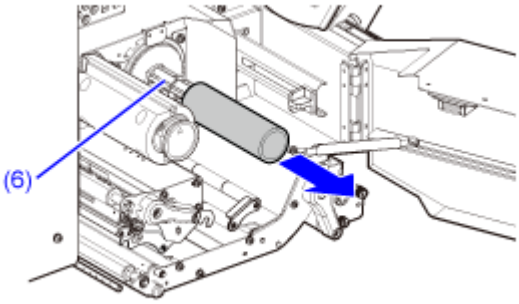

7. Load the ribbon (7) onto the ribbon supply spindle (6).

While taking note of the wind direction, insert the ribbon all the way in.

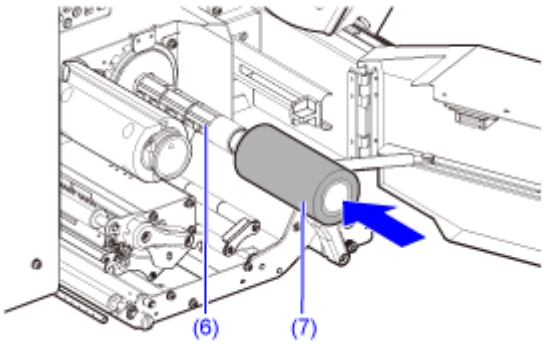

8. **Put the ribbon that is passing below the print head (8) against the grip sheet (9), and then wind the ribbon on the ribbon rewind spindle (5).**

Turn the ribbon rewind spindle in the direction of the arrow for several rotations, to wind the ribbon.

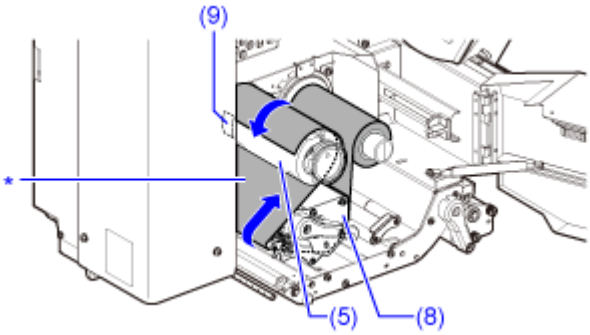

* Inked side

- The diagram shows a face-in ribbon. The face-out ribbon is loaded on the ribbon supply spindle in the opposite orientation.

9. **Close the head lock lever (3).**

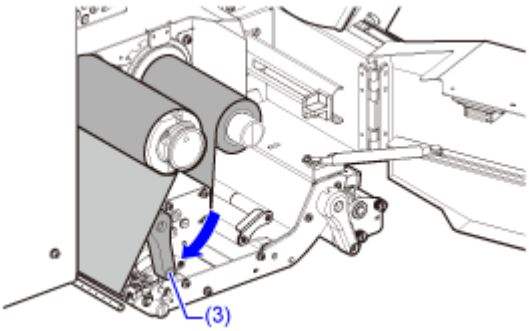

10. **Close the front cover (1).**

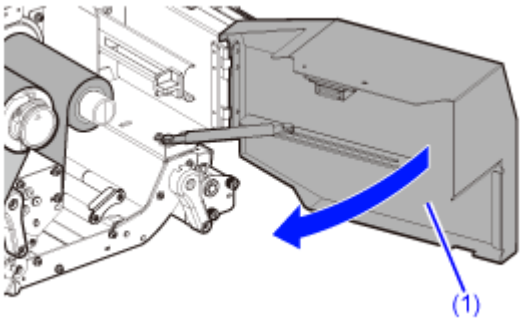

- When closing the front cover, be careful not to pinch your fingers.

11. **Press the button in Offline mode to feed media.**

12. **If there is a product error, press the button to clear the error.**

13. Press the button to change to Online mode.

14. Do a print operation to confirm that the ribbon is loaded correctly.

- If you replaced the ribbon while printing was stopped, printing starts again automatically when the system goes back online.

When to Replace Media and Ribbon

Conditions That Trigger Paper End

The end of the media is indicated by the warning lamp and on the display.

Display		Warning lamp	
Status bar	**Error screen**	**Two level buzzer**	**Three level buzzer**
-		Flashing red*	Flashing red*

* Lights if you have selected [Light] in the [Applications] > [Applicator] > [Warning Lamp] > [Light/Blink Selection] menu.

The conditions that trigger paper end vary depending on the operation of the product.

Conditions That Trigger Paper End in the Feeding Operation

A paper-end error occurs if the no-paper condition persists while 15 mm (0.59") of media (30 mm (1.18") for the gap sensor) is fed from the point when a no-paper condition is detected by the paper end sensor.

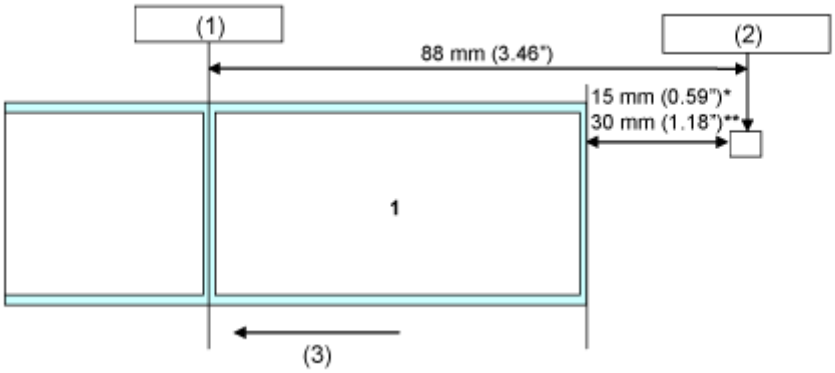

* For the I-mark sensor

** For the gap sensor

(1) Print head position

(2) Paper end sensor: I-mark sensor/Gap sensor

Select [Advanced] > [Paper End] in the [Printing] menu, or specify by command.

(3) Media feed direction

Conditions That Trigger Paper End in the Printing Operation

1. The paper end sensor detects a no-paper condition at the position where 15 mm (0.59") (30 mm (1.18") for the gap sensor) has been fed.

2. If a paper end occurs, reprinting is done after the paper end error is cleared.

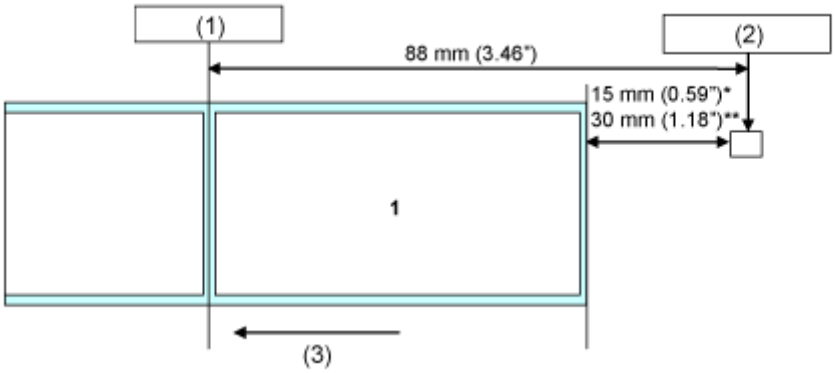

* For the I-mark sensor

** For the gap sensor

(1) Print head position

(2) Paper end sensor: I-mark sensor/Gap sensor

Select [Advanced] > [Paper End] in the [Printing] menu, or specify by command.

(3) Media feed direction

- The timing for when a paper end occurs is set in [Paper End Output Timing].

Conditions That Trigger Label Near End

When the labels are near their end, it is indicated by the warning lamp and on the display.

Display		Warning lamp	
Status bar	**Error screen**	**Two level buzzer**	**Three level buzzer**
	-	Flashes green	Lights green+ Flashes yellow*

* Lights if you have selected [Light] in the [Applications] > [Applicator] > [Warning Lamp] > [Light/Blink Selection] menu.

- The warning icon appears and the warning lamp operates only if you have selected [Enabled] in the [Printing] > [Advanced] > [Label Near End] menu.

Label near end is detected by the label near end sensor.

Label near end occurs when "No labels" continues while printing or feeding media.

- Detection of the label near end is only for reference. The timing of label near end and paper end may overlap, or the paper end may occur before the label near end occurs depending on the label thickness and the top and bottom fluttering of the paper core.

Conditions That Trigger Ribbon End

The end of the ribbon is indicated by the warning lamp and on the display.

Display		Warning lamp	
Status bar	**Error screen**	**Two level buzzer**	**Three level buzzer**
-		Flashing red*	Flashing red*

* Lights if you have selected [Light] in the [Applications] > [Applicator] > [Warning Lamp] > [Light/Blink Selection] menu.

Ribbon end error is detected by the ribbon sensor in the ribbon supply spindle. For the thermal transfer system, a ribbon end error occurs when the product detects that the ribbon in the ribbon supply spindle has not moved (rolled) more than 15 mm (0.59") after feeding the media.

- If an optional ribbon end sensor is installed and you have selected [Enabled] in the [Printing] > [Advanced] > [Ribbon End Sensor] menu, then a ribbon error occurs when the sensor detects the end of the ribbon.

Conditions That Trigger Ribbon Near End

The near end of the ribbon is indicated by the warning lamp and on the display.

Display		Warning lamp	
Status bar	**Error screen**	**Two level buzzer**	**Three level buzzer**
	-	Flashes green	Flashes yellow*

* Lights if you have selected [Light] in the [Applications] > [Applicator] > [Warning Lamp] > [Light/Blink Selection] menu.

- The ribbon end error appears and the warning lamp operates only if you have selected [Enabled] in the [Printing] > [Ribbon Near End] menu.
- The timing for when a ribbon near end occurs can be set in the [Printing] > [Advanced] > [Ribbon Near End Level] menu.

Ribbon near end, which indicates that there is very little ribbon left, is detected by the ribbon sensor in the ribbon supply spindle. A ribbon near end occurs when the amount of ribbon remaining, based on the rotational speed of the ribbon on the supply side, is as follows.

Ribbon near end level: Short

About 5 to 15 m (16.40 to 49.21 feet)

Ribbon near end level: Standard

About 15 to 25 m (49.21 to 82.02 feet)

Ribbon near end level: Long

About 25 to 30 m (82.02 to 98.43 feet)

- The ribbon near end detection is only for reference. The timing of ribbon near end varies depending on the ribbon thickness and the reading status of the ribbon sensor.

Media Settings

Before starting to print with the product, configure the product according to the media to be used.

Print Method

The product supports two types of print methods, thermal transfer and direct thermal.

Thermal transfer

Prints using a ribbon.

Direct thermal

Prints using direct thermal media.

- Ribbon is not necessary if you are using direct thermal media.

Change the print method according to the following procedure:

1. **Press the button in Online mode.**

The product changes to Offline mode.

2. **Press the button.**

The product changes to Settings mode.

3. **Select [Printing] using the / buttons.**

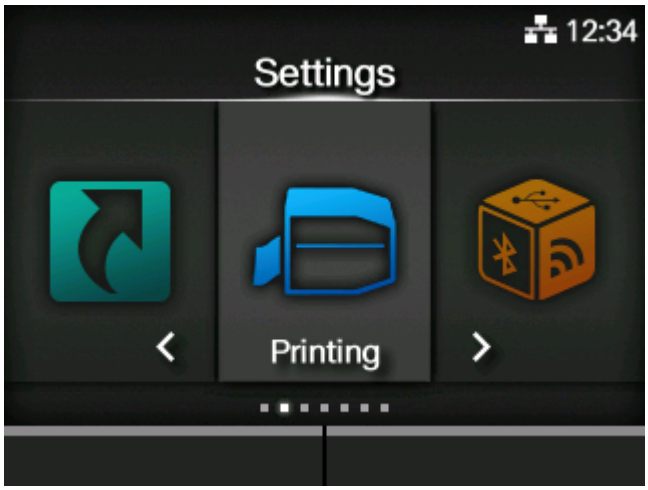

4. **Press the button.**

The item list appears.

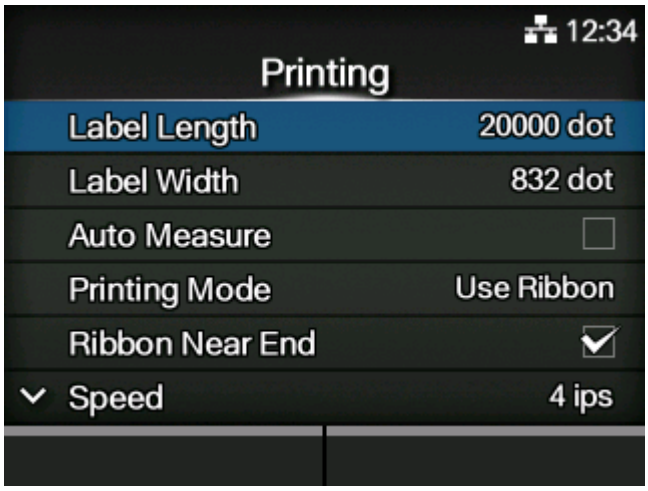

5. **Select [Printing Mode] using the ▲/▼ buttons.**

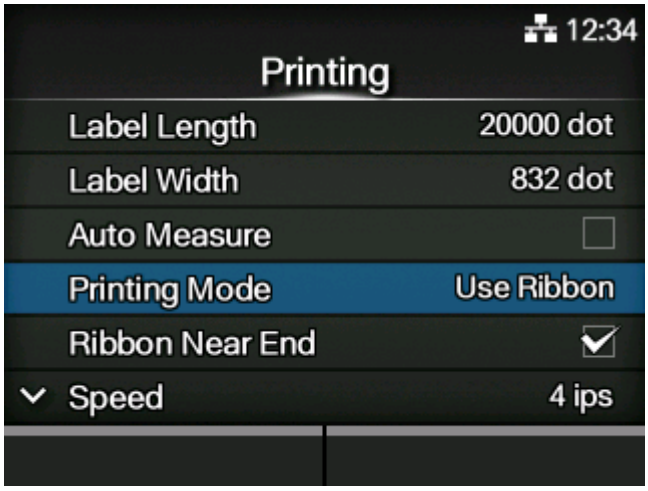

6. **Press the ↵ button.**

The [Printing Mode] screen appears.

7. **Select the print method using the ▲/▼ buttons.**

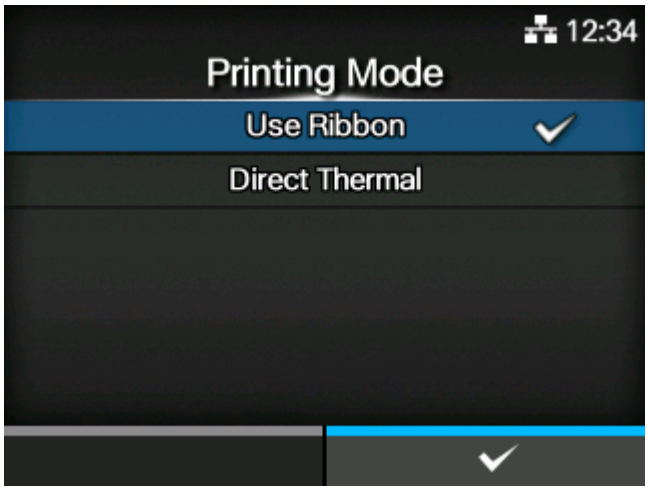

[Use Ribbon]

Prints using a ribbon.

[Direct Thermal]

Prints using direct thermal media.

8. **Press the button to confirm.**

Media Sensor Type

The product adjusts the print position precisely by detecting I-marks or gaps on the media (label) using media sensors.

The I-marks or Gaps on each type of media are as follows:

I-mark label	Gap label
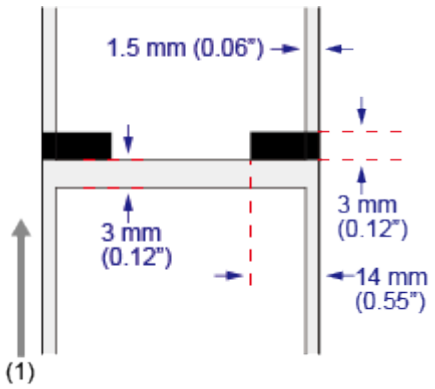	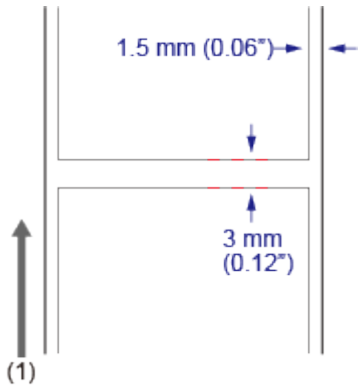

(1) Feed direction

Set the sensor type to detect the print position according to the media to be used.

Set the sensor type according to the following procedure:

1. **Press the button in Online mode.**

The product changes to Offline mode.

2. **Press the button.**

The product changes to Settings mode.

3. **Select [Printing] using the / buttons.**

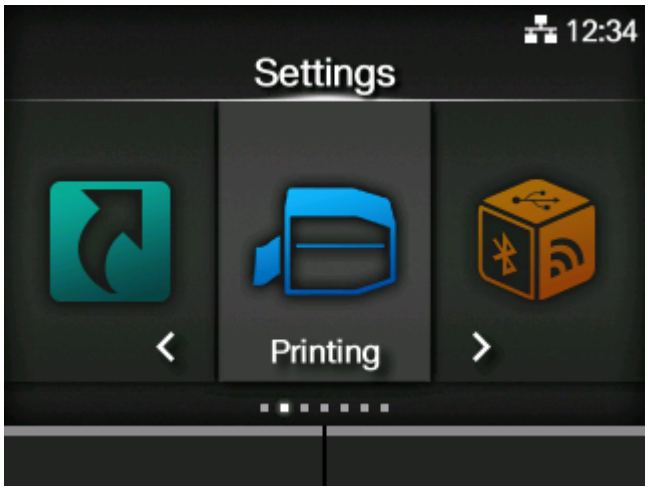

4. **Press the button.**

The item list appears.

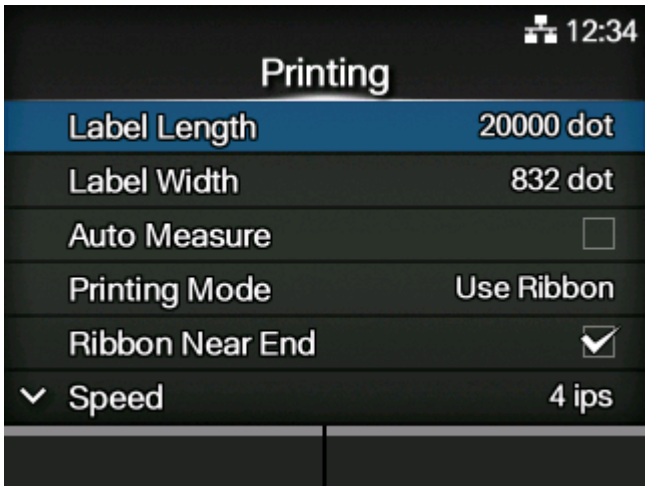

5. **Select [Sensor Type] using the ▲/▼ buttons.**

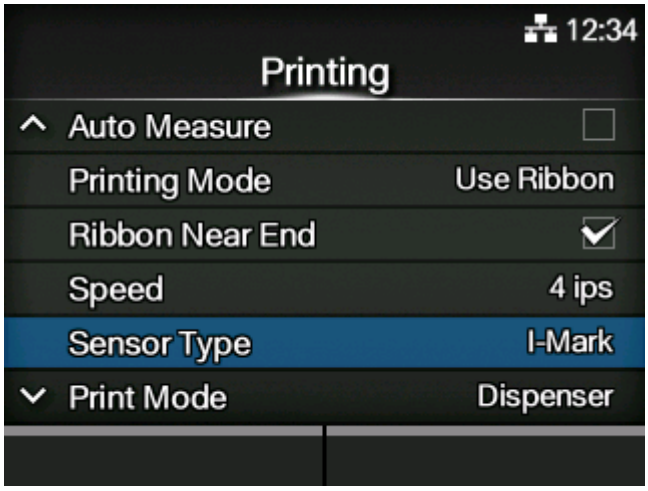

6. **Press the ↵ button.**

The [Sensor Type] screen appears.

7. **Select the sensor type to detect the print position using the ▲/▼ buttons.**

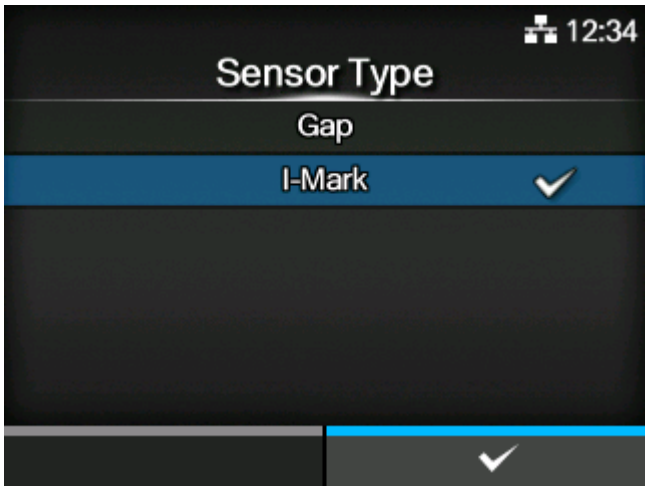

[Gap]

Select when using gap type media. Use the transmissive type sensor.

[I-Mark]

Select when using I-mark type media. Use the reflective type sensor.

8. **Press the button to confirm.**

Connecting the Product to a Computer

This section explains how to connect the product to a computer.

Procedure for Connecting the Product to a Computer

The product supports various interfaces and can be connected to a computer in an optimum way for your environment. When you have installed the printer driver to the computer, the data created with the computer (documents and illustrations) can be printed to a label through easy operations.

Also, you can print by sending a command directly to the product.

The product can be connected to a computer in the following ways.

1. Connecting Interfaces

2. Configuring the Interface Settings from the Interface Menu of the Product

   Set the product's interface from the [Interface] menu on the Settings menu, which can be accessed from the product's display or the web settings page.

   - When you connect them with a LAN interface, configure the communication conditions, such as the IP address of the product.
   - When you connect them with other interfaces, configure the communication conditions when needed to adapt to the computer to which you are connecting.
   - To use the printer driver, the communication protocol must be set to Status4. (The initial value for the communication protocol for the product's interfaces is StatusL.)

3. Installing the Printer Driver (Unnecessary when using commands)

- Use barcode fonts to create a barcode. Sometimes the barcode may not be read by a scanner if it is created with tools for creating images (such as BMP) and printed from the product. Because the tools create the barcode as an image only, the barcode may not be the correct data. Therefore, if the barcode cannot be read by a scanner, it is not a failure of the product or printer driver. Note that reading of the barcode is not guaranteed if it is created by such tools.
- The head check is just for a reference to check a broken element of the print head, and it is not a function to guarantee barcode readability. A regular barcode reader test is required.

Connecting Interfaces

Available Interfaces

The product supports the following interfaces.

- A product connected with multiple interface cables can continue to operate when receiving data. However, you cannot receive data from more than one interface at a time. Normally, do not use multiple interfaces at a time.
- The product prints the received data in order of reception. The next received data is stored in the receive buffer while the first data is printed.

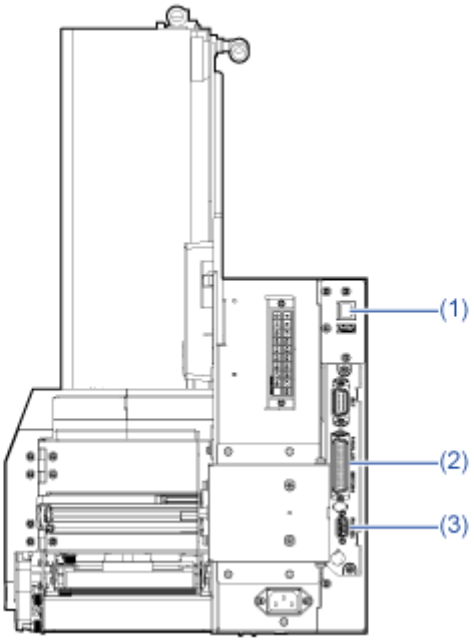

(1) LAN

(2) IEEE1284

(3) RS-232C

- Do not connect or disconnect the interface cables (or use a switch box) while power is supplied to either the product or computer. This may cause damage to the interface circuitry in the product or computer and is not covered by warranty.
- Put the I/F connector caps that are provided on the interfaces that you do not use.

LAN Interface Connection

Connect the interface cable when the product is powered off.

Connect the LAN cable to the LAN connector (1) of the product.

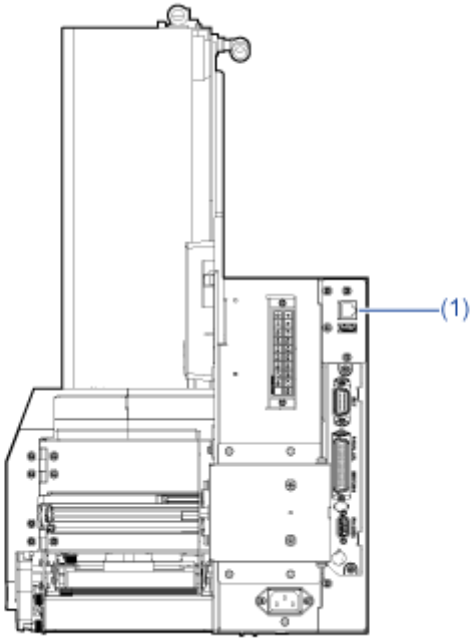

The communication condition settings must be configured according to your network environment. Set the IP address of the product.

The IP address of the product can be set from the product's [Interface] menu.

- To use the printer driver, the communication protocol must be set to Status4. (The initial value for the communication protocol for the product's LAN interface is StatusL.)

RS-232C Interface Connections

Connect the interface cable when the product is powered off.

Connect the RS-232C cable to the RS-232C connector (1) of the product.

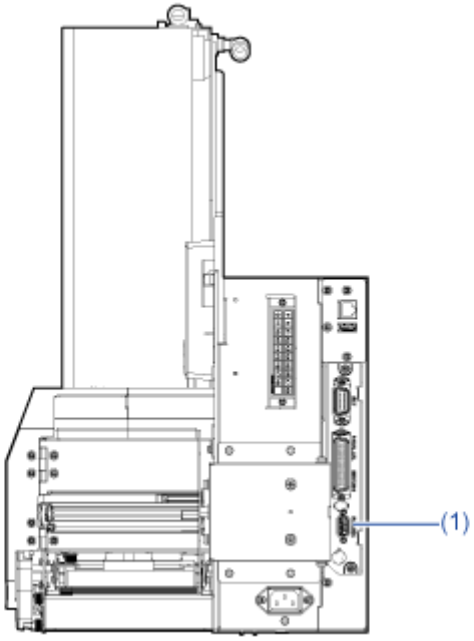

Configure the interface settings of the product according to the interface settings of the computer.

The communication conditions of the RS-232C interface can be set from the product's [Interface] menu.

- The interface settings of the computer can be confirmed by the following. In the Device Manager, right-click [Ports] > [Communications Port (COM1)] and select [Properties]. Then, check the [Port Settings] tab of the displayed Properties screen.
- For the RS-232C cable, note that the connection cable varies according to the communication protocol setting. If you use the wrong cable, it will not operate correctly.
- If the communication settings differ between the computer and product, it will not operate correctly. A communication error will be detected.
- To use the printer driver, the communication protocol must be set to Status4. (The initial value for the communication protocol for the product's RS-232C interface is StatusL.)
- Be sure to use the recommended RS-232C cable.
- Printing using the USB serial conversion cable is not guaranteed. Also, no support for the connection procedure is provided.

Product DB-9P		Host DB-9P	
1	CD	1	CD
2	RD	3	SD
3	SD	2	RD
4	ER	6	DR
5	SG	5	SG
6	DR	4	ER
7	RS	8	CS
8	CS	7	RS

IEEE1284 Interface Connection

Connect the interface cable when the product is powered off.

Connect the IEEE1284-compliant cable to the IEEE1284 connector (1) of the product.

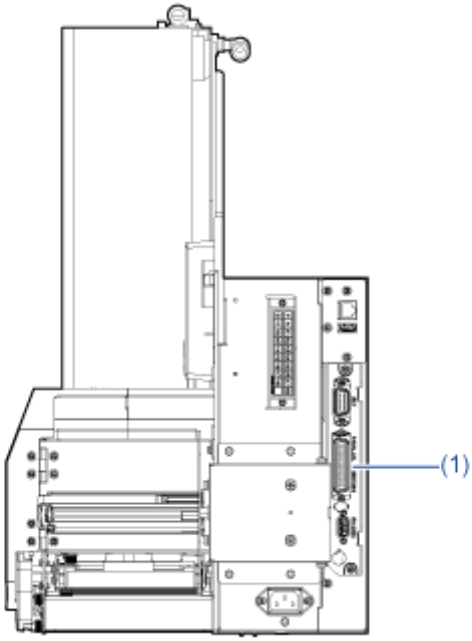

- If the product is turned on without installing the printer driver, Windows' Plug & Play runs. When you use the printer driver, do not turn on the product while the cable is connected, until instructed in the procedure for installing the printer driver.
- Be sure to use the recommended IEEE1284-compliant cable. If you use cables other than the IEEE1284-compliant cable, your data may become corrupt.
- IEEE1284-compliant: compatible mode, ECP mode, and nibble mode are supported.
- Some computers may not support ECP mode.
- ECP mode is configured in the BIOS settings of the computer. Some computers may use the software tools for Windows.
- Some computer models may not perform ECP operations even if they are set to ECP mode. Contact the computer manufacturer.
- Printing using the USB parallel conversion cable is not guaranteed. Also, no support for the connection procedure is provided.

Configuring the Interface Settings from the Interface Menu of the Product

Configure the settings related to the interfaces from the [Interface] menu in the Settings mode of the product.

1. **Press the button in Online mode.**

The product changes to Offline mode.

2. **Press the button.**

The product changes to Settings mode.

3. **Select [Interface] using the ◀/▶ buttons.**

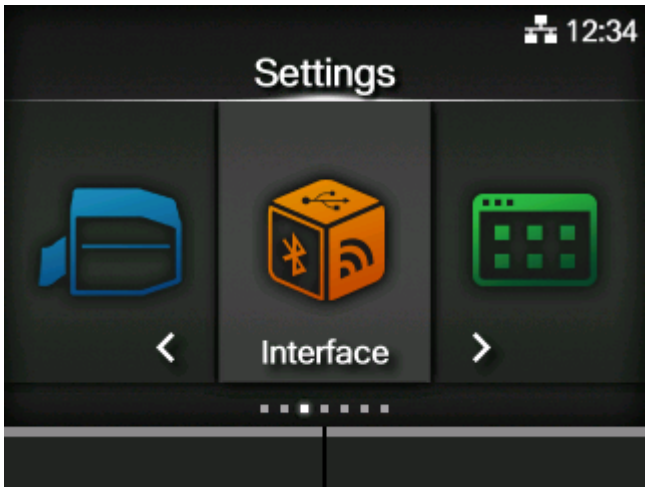

4. **Press the ↵ button.**

The item list appears.

5. **Select the interface using the ▲/▼ buttons.**

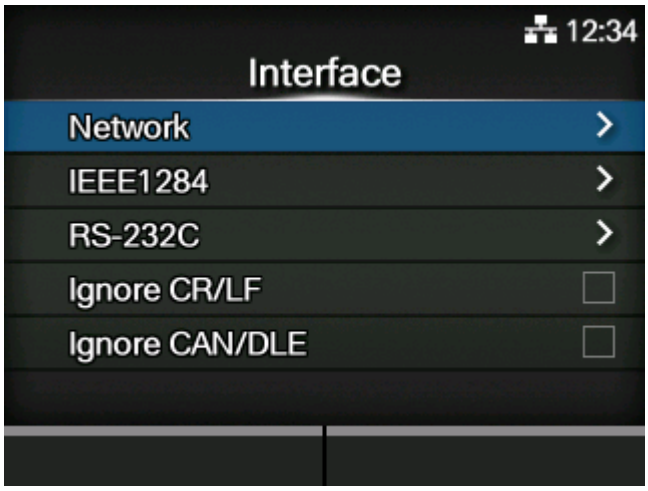

[Network]

Set the LAN connection.

[IEEE1284]

Set the IEEE1284 connection.

[RS-232C]

Set the RS-232C connection.

[Ignore CR/LF]

Set to ignore CR/LF codes.

[Ignore CAN/DLE]

Set to ignore CAN/DLE codes.

6. Press the button.

The settings items of the selected interface appear.

Change the settings according to the communication conditions of the connected network and computer.

Installing the Printer Driver

The printer driver is software that can send data created on the computer (documents and illustrations) to the product and print it to a label.

Printer Driver

Download and use the printer driver from the SATO printer driver download site http://www.satoworldwide.com/software/gallerydriver.aspx.

For the installation method, refer to the driver installation and uninstallation manual on the same page.

Also refer to the online manual for the CL4NX/CL6NX.

http://www.manual.sato-global.com/printer/cl4nx_cl6nx

Compatible OS

Regarding OS that are compatible with the printer driver, access the SATO printer driver download site http://www.satoworldwide.com/software/gallerydriver.aspx and refer to the "Support OS" row of the SATO Windows printer driver.

Various Settings of the Product

The Product's [Settings] Menu

[Shortcut] Menu

A shortcut to frequently used settings appears in the [Shortcut] menu.

[Printing] Menu

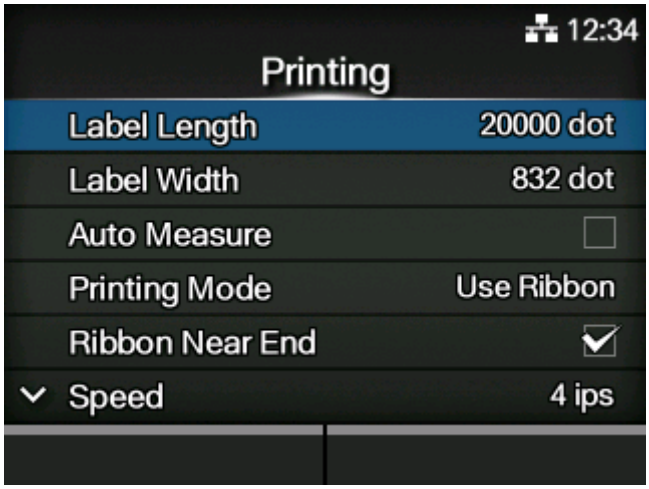

The following settings are available in the [Printing] menu:

Label Length

Set the length of the media.

Label Width

Set the width of the media.

Auto Measure

Automatically measure the length of the media.

Printing Mode

Set whether to print using a ribbon or direct thermal media.

Ribbon Near End

Enable or disable the warning when the ribbon is about to run out.

- Appears if you have selected [Use Ribbon] in the [Printing Mode] menu.

Speed

Set the print speed.

Sensor Type

Set the media sensor type.

Print Mode

Manually set the print mode.

Backfeed

Set the backfeed operation.

Darkness Range

Set the range of the print darkness.

Darkness

Set the print darkness.

Imaging

Set the print reference position in the vertical and horizontal directions.

Advanced

Set the sensor operation and print motion.

[Label Length]

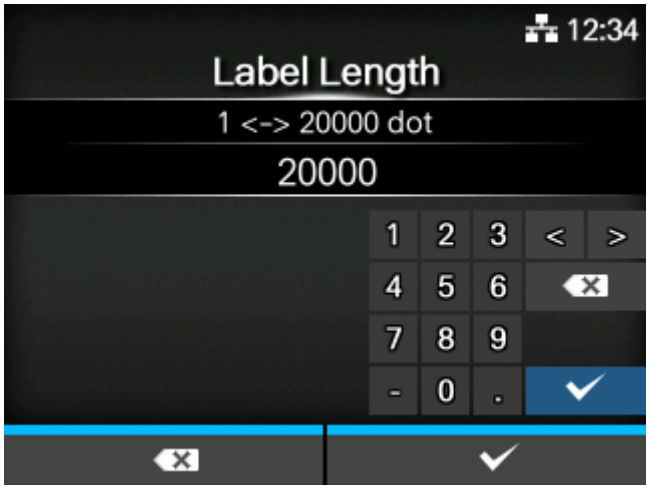

Set the length of the media.

The setting range varies depending on the print resolution of the product.

The setting range of the label length is as follows:

Resolution	Setting range
203 dpi (1 dot = 0.125 mm (0.0049"))	1 to 20000 dots
305 dpi (1 dot = 0.083 mm (0.0033"))	1 to 18000 dots

- Set the label size to a value that includes the liner.

[Label Width]

Set the width of the media.

The setting range varies depending on the print resolution of the product.

The setting range of the label width is as follows:

Resolution	Setting range
203 dpi (1 dot = 0.125 mm (0.0049"))	1 to 832 dots
305 dpi (1 dot = 0.083 mm (0.0033"))	1 to 1248 dots

- Set the label size to a value that includes the liner.

[Auto Measure]

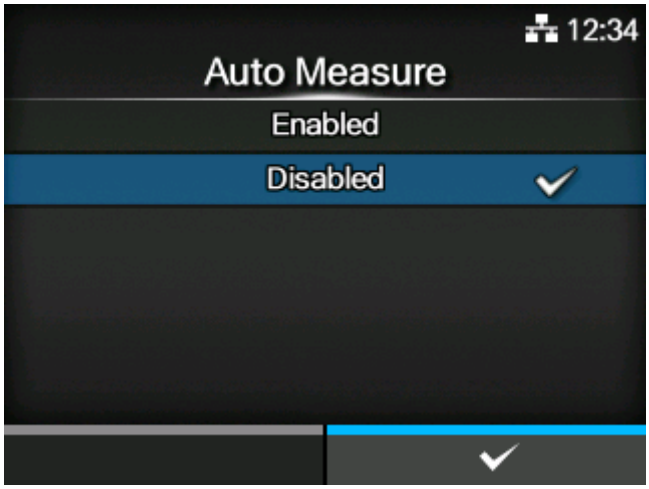

The product automatically measures the length of the media.

The measured length of the media will be automatically saved in [Label Length].

The setting procedure of the label length using the Auto Measure function is as follows:

1. Load the media.
2. Set [Auto Measure] to [Enabled].
3. Press the button or button to show the Online or Offline screen.
4. Open the print head. (Head Open error occurs.)
5. Close the print head. (The display returns to Offline screen.)
6. When you press the button, the product feeds two pieces of label and measures the label length.
7. The measured label length is saved in [Label Length].

- When you have set [Auto Measure] to [Enabled], this function executes when the product powers on.

[Printing Mode]

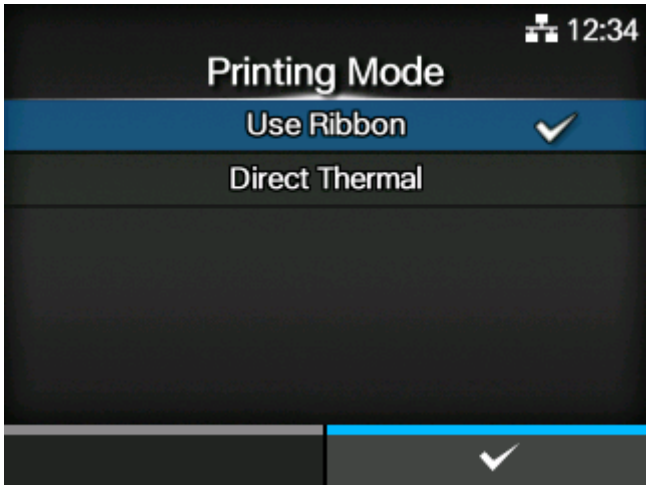

Set whether to print using a ribbon or direct thermal media.

The options are as follows:

Use Ribbon

Print using a ribbon.

Direct Thermal

Print using direct thermal media.

[Ribbon Near End]

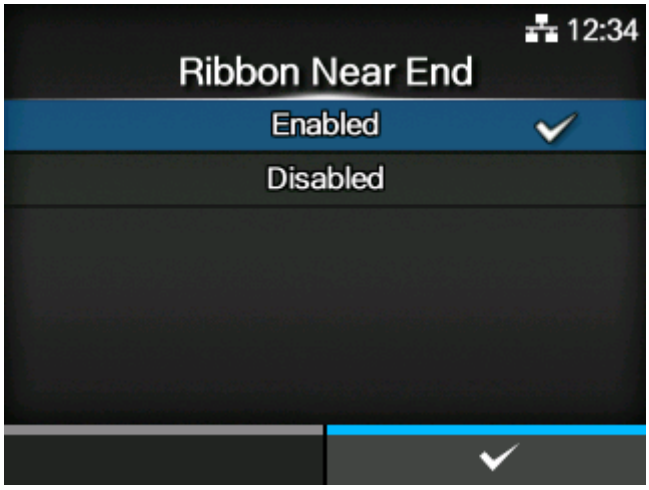

Shows or does not show the warning icon when the ribbon is about to run out. Printing does not stop even if the warning icon shows up.

Appears if you have selected [Use Ribbon] in the [Printing Mode] menu.

The options are as follows:

Enabled

Shows the warning icon.

Disabled

Does not show the warning icon.

- The warning icon is shown in the status bar on the upper part of the screen.

[Speed]

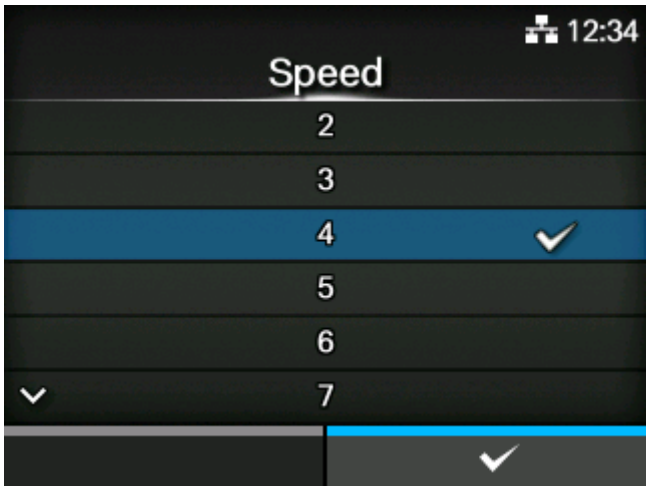

The setting range varies depending on the print resolution of the product.

The setting range of the print speed is as follows:

Resolution	Setting range
203 dpi (8 dots/mm)	2 to 10 ips (inches/sec) (50.8 to 254 mm/sec)
305 dpi (12 dots/mm)	2 to 10 ips (inches/sec) (50.8 to 254 mm/sec)

- Setting the print speed to a level that is too fast may affect the print quality.

[Sensor Type]

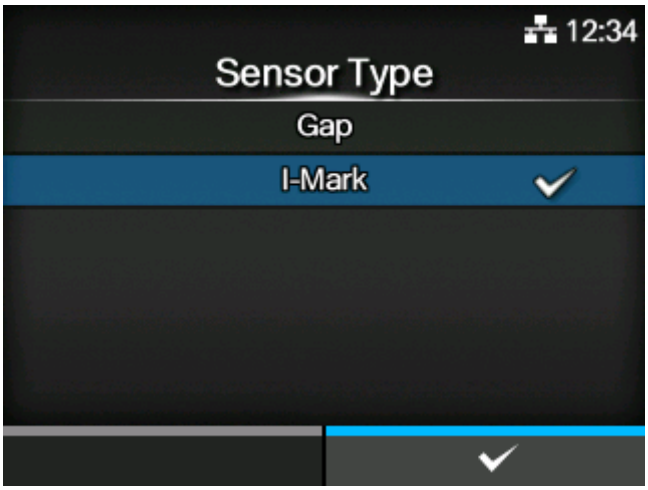

Set the sensor type for detecting the media.

The options are as follows:

Gap

Select when using gap type media. Use the transmissive type sensor.

I-Mark

Select when using I-mark type media. Use the reflective type sensor.

[Print Mode]

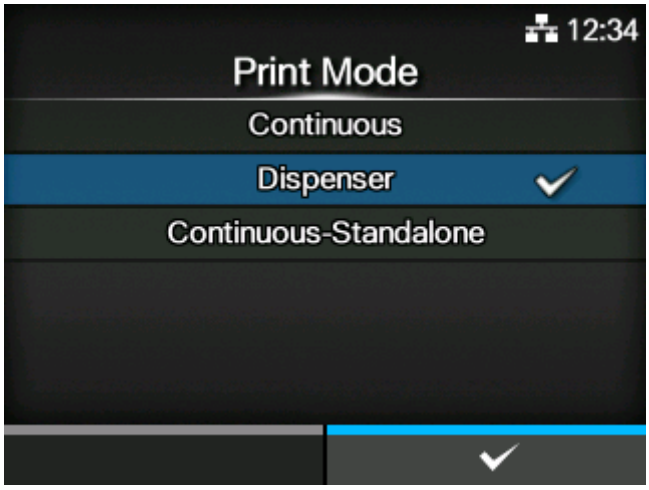

Set the print mode.

The options are as follows:

Continuous

Continuously print the specified number of the media. Applicator errors and external I/O are enabled.

Specify this when using a special applicator. Normally this is not used.

Dispenser

Use the Normal Operation mode when using the applicator.

The liner is peeled from the printed label as the label is fed to the applicator.

Continuous-Standalone

This operation mode is used when only printing without using the applicator.

Applicator errors and external I/O are disabled.

[Backfeed]

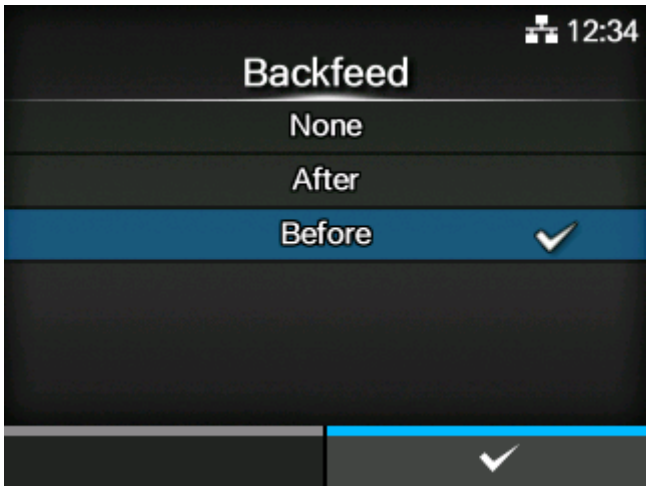

[Backfeed] is applicable when the print mode is set to Dispense mode.

The options are as follows:

None

Do not backfeed.

After

After dispensing the label, the labels are backfed until the leading edge of the next label.

After printing, the leading edge of the next media is backfed to the print head position.

- You can adjust the timing of the backfeed by using [Backfeed Timing].
- Selecting [After] displays the [Backfeed Timing] menu.

Backfeed Timing

Before

Before printing, backfeed the front part of the next media to the print head position.

- If you select [Continuous] or [Continuous-Standalone] for [Print Mode], the setting is fixed as [None].

[Backfeed Timing]

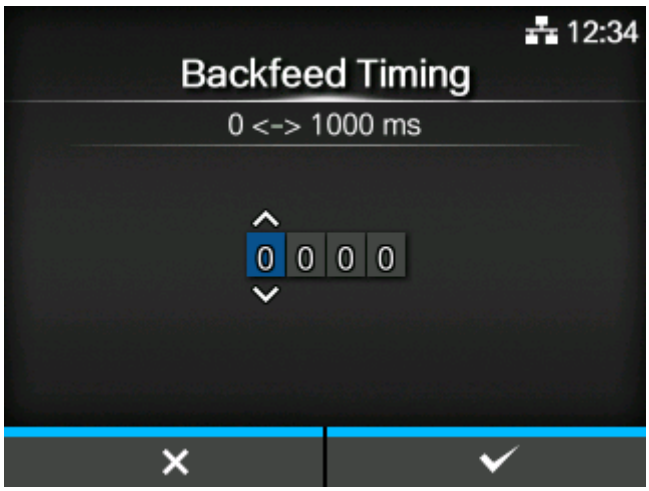

Set the time from the start of the cylinder's forward motion to the start of backfeed, after printing is complete.

If the setting is 0 ms, then backfeed starts after application is complete.

Even if the backfeed timing is long, the backfeed starts after application is complete.

The setting range is from 0 to 1000.

- This setting appears when you select [After] in [Backfeed].

[Darkness Range]

Set the range of the print darkness.

The darkness range affects the print darkness.

The options are as follows:

A, B, C, D, E, F

- Use A. Do not use B to F.

[Darkness]

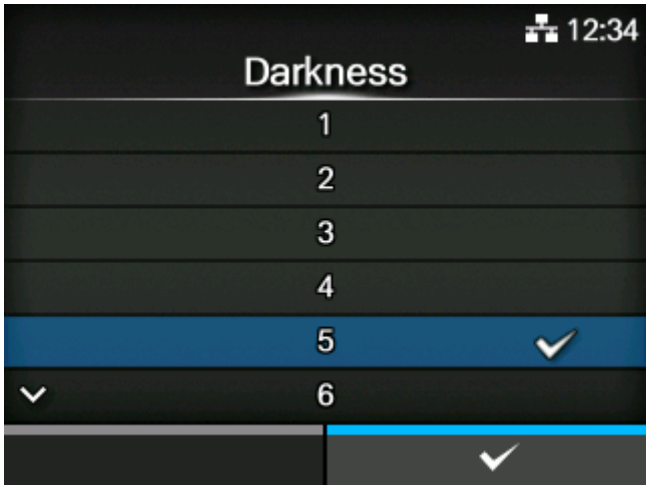

Specify the print darkness from 10 steps.

The setting range is from 1 to 10. 1 is the lightest and 10 is the darkest.

- To further fine tune the print darkness, set the items in [Printing] > [Advanced] > [Adjustments] > [Darkness Adjust].

[Imaging]

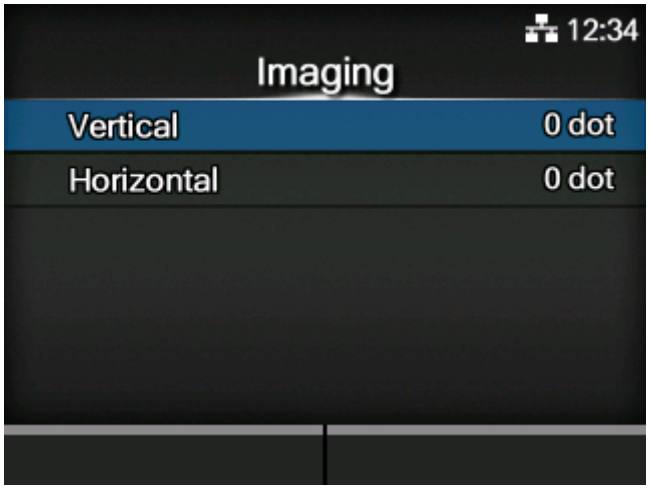

Set the print reference position in the vertical and horizontal directions.

The setting items are as follows:

Vertical

Adjust the print position in the vertical (feed) direction.

Horizontal

Adjust the print position in the horizontal direction.

Adjusting direction of the print reference position and base reference point

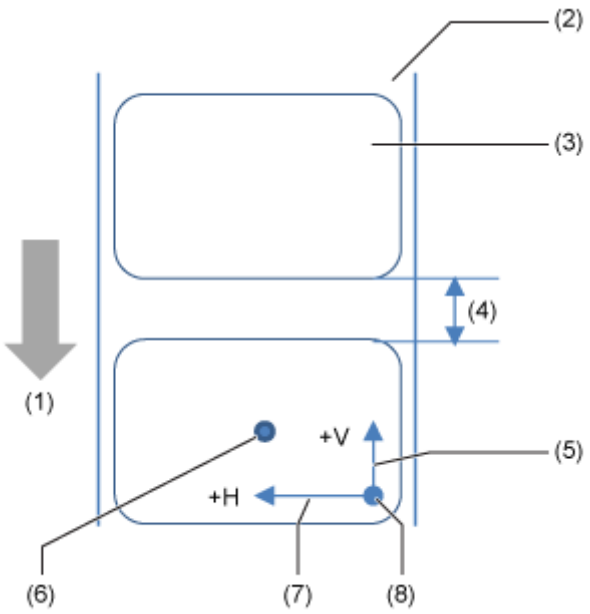

(1) Feed direction

(2) Liner

(3) Label

(4) Gap between labels

(5) Adjustment of vertical base reference point

(6) Base reference point after adjustment

(7) Adjustment of horizontal base reference point

(8) Print reference position

[Vertical]

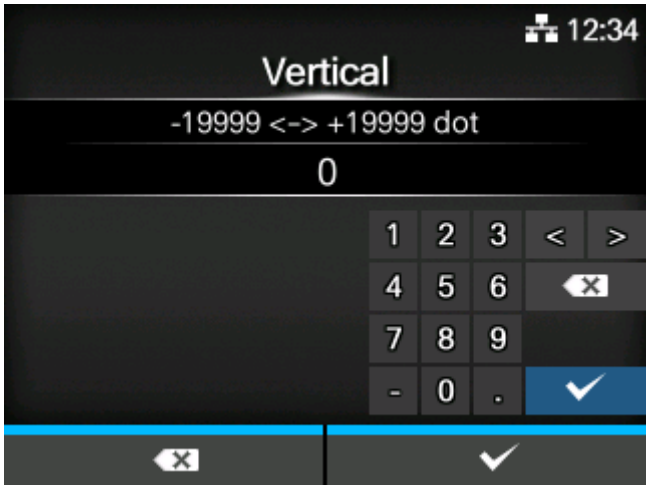

Set the print position in the vertical direction.

Set the correction value from the standard printing position as "-" for the direction of the paper feed and "+" for the direction opposite to the paper feed.

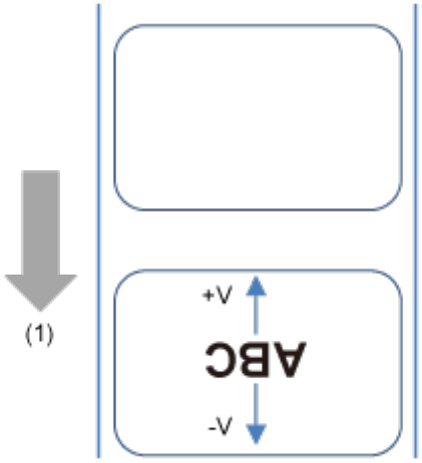

(1) Feed direction

The setting range varies depending on the print resolution of the product.

The setting range is as follows:

Resolution	Setting range
203 dpi (1 dot = 0.125 mm (0.0049"))	-19999 to 0 to 19999 dots

Resolution	Setting range
305 dpi (1 dot = 0.083 mm (0.0033"))	-17999 to 0 to 17999 dots

[Horizontal]

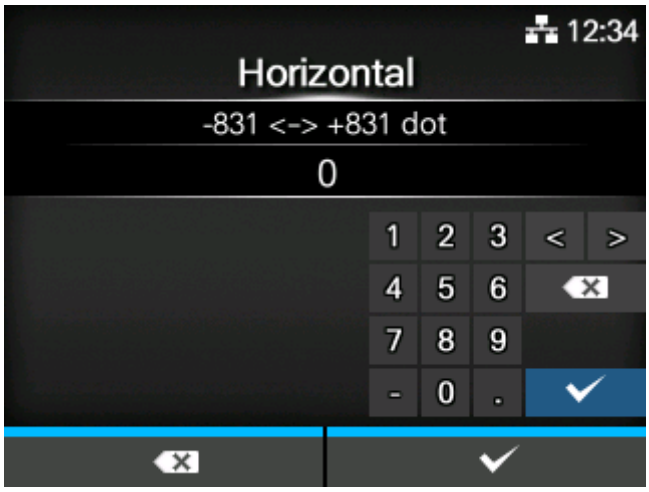

Set the print position in the horizontal direction.

Set the correction value from the standard printing position when facing the product, use "-" to adjust to the right side and "+" to adjust to the left side.

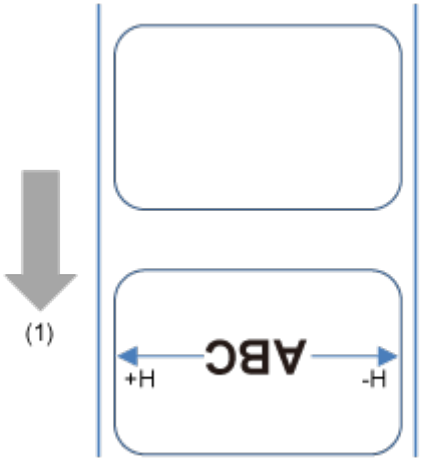

(1) Feed direction

The setting range varies depending on the print resolution of the product.

The setting range is as follows:

Resolution	Setting range
203 dpi (1 dot = 0.125 mm (0.0049"))	-831 to 0 to 831 dots
305 dpi	-1247 to 0 to 1247 dots

Resolution	Setting range
(1 dot = 0.083 mm (0.0033"))	

[Advanced]

Set detailed sensor operation and print motion.

The setting items are as follows:

Calibrate

Adjust the media sensor.

Head Check

Check if there is a broken element of the print head.

Head Check Mode

Set the mode for head check.

- Appears only if you have selected [All] or [Barcode] in the [Head Check] menu.

Every Page

Set the interval for head check.

- Appears if you have selected [Every Page] in the [Head Check Mode] menu.

Check Media Size

Enable or disable media size check.

Adjustments

Correct the offset value, print position and print darkness.

Start Online

Set whether to power on the product in Online mode.

Feed After Error

Set whether to automatically feed the media when recovering from an error.

Feed At Power On

Set whether to automatically feed the media when the product is powered on.

Finisher Feed

Set the length to feed after printing.

Paper End

Select the sensor for sensing the paper end.

Prioritize

For product settings, set whether to prioritize the settings that are done through the product or through commands.

Reprint

Enable or disable the reprint function.

Print End Position

Set the stop position of the media.

Label Near End

Enable or disable the warning when the media is about to run out.

Receive After Reset

Set whether to automatically go online when recovering from a reset and switching to Online mode.

Feed After Error Message

Set whether to show the "Press Feed" message after recovering from an error, for errors that can be recovered from by opening and closing the head.

Job Name Display

Set whether to show the name of the job on the display when the received data includes the job name specification command ESC+WK.

Virtual Sensor Position

Input the virtual dimension from the media sensor to the print head to use the virtual sensor function to adjust the feed capacity.

Print Start Position

If you have selected [I-Mark] in the [Sensor Type] menu, set the reference position to start printing.

Ribbon Near End Level

Select the amount of ribbon remaining when the end of the ribbon is detected.

Paper End Output Timing

Sets the timing for when a paper end occurs.

Ribbon End Sensor

Sets whether a ribbon end error occurs when the end of the ribbon is detected by the ribbon end sensor (option).

Label End Sensor

Sets whether a label end error occurs when the end of the label is detected by the label end sensor (option).

[Calibrate]

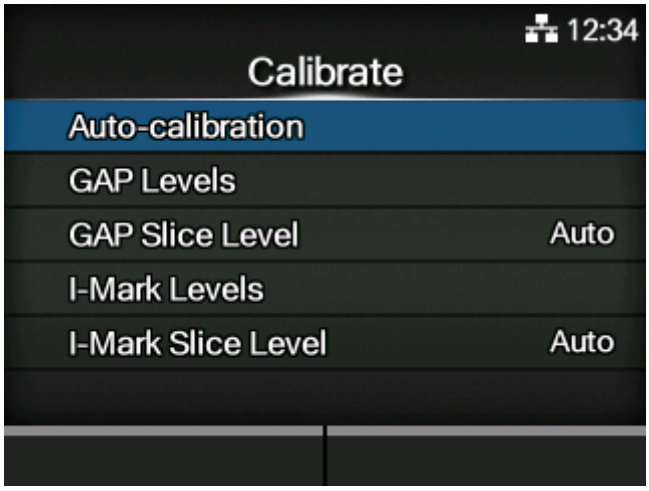

Adjust the media sensor level.

In instances of media detection malfunction, adjust the media sensor level (Gap and I-mark sensors).

The setting items are as follows:

Auto-calibration

Automatically adjust the sensor level.

GAP Levels

Manually set the Gap sensor level.

Gap Slice Level

Manually set the Gap sensor slice level.

I-Mark Levels

Manually set the I-mark sensor level.

I-Mark Slice Level

Manually set the I-mark sensor slice level.

[Auto-calibration]

Perform the auto-calibration for the selected media sensor.

Gap + I-Mark

Adjusts both the Gap sensor and I-mark sensor.

Gap

Adjusts the Gap sensor.

I-Mark

Adjusts the I-mark sensor.

The procedure to auto-calibrate the media sensor is as follows:

1. Open the head lock lever to release the print head's lock.
2. Pass the media below the media sensor guide. If you are using labels, remove the label from the liner. Align it so that the media sensor does not detect the I-mark (black mark).
3. Close the print head to lock it. To get the correct adjustment result, adjust after you have locked the print head.
4. Press the ▲/▼ buttons to select the type of sensor to be adjusted.
5. Press the button or button.
6. When the confirmation screen appears, press the button to start the sensor adjustment.
7. The result of the sensor adjustment is shown. To exit the adjustment, press the button.
8. Do this setting in Offline mode. Press the button to confirm that the media is fed correctly.

- If the media is not fed correctly after doing [Auto-calibration], contact your SATO reseller, dealer, or technical support center.

[GAP Levels]

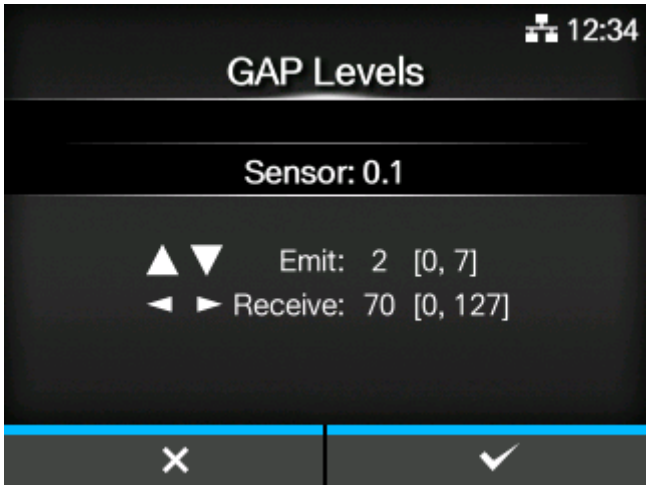

Manually set the Gap sensor level.

The setting procedure is as follows:

First, adjust the "Low" level (voltage) of the Gap sensor.

1. Remove the label from the liner.
2. Pass the liner through the media sensor. Align it so that the media sensor does not detect the I-mark (black mark).
3. Close the print head. To get the correct adjustment result, adjust after you have closed the print head.
4. Select the [GAP Levels] in the [Calibrate] menu and press the button.
5. Press the / buttons to change the [Emit] value until the [Sensor] value is below 0.5 (V). Set the [Emit] value as low as possible.
6. If the [Sensor] value does not decrease below 0.5 after you changed the [Emit] value, press the / buttons to change the [Receive] value.
7. Take a note of the [Sensor] value from the above procedure. This is the "Low" level value for the Gap sensor.

Next, check the "High" level (voltage) of the Gap sensor as follows:

1. Pass the media (attached with liner) between the media sensors. Align it so that the media sensor does not detect the I-mark (black mark).
2. Close the print head.
3. Check the [Sensor] value.

   If the value is 1.0 (V) higher than the "Low" level value you have recorded, this is the "High" level value for the Gap sensor.
   If the difference between the "High" and the "Low" levels is less than 1.0, adjust the [Emit] and [Receive] values so that the difference is more than 1.0, or adjust the "Low" level (voltage) of the Gap sensor again.
4. If both "High" and "Low" levels comply with the standard value, press the button to confirm the value.

   The standard values for the "High" and "Low" levels for the Gap sensor are as follows:

   - Low (with only liner) ≤ 0.5 (V)
   - High (media attached with liner) - Low ≥ 1.0 (V)

[Gap Slice Level]

Set the Gap sensor slice level.

The setting procedure is as follows:

1. Use the following formula to calculate the slice level:
   (High level - Low level) x 0.3 + Low level = slice level
2. Select the [Gap Slice Level] in the [Calibrate] menu and press the button.
3. Press the / buttons to change the [Slice level] value. Set the [Slice level] to the level calculated in step 1.
4. Press the button to confirm the value.

- If you set the [Slice level] to 0.0 (V), the product sets the slice level automatically.

[I-Mark Levels]

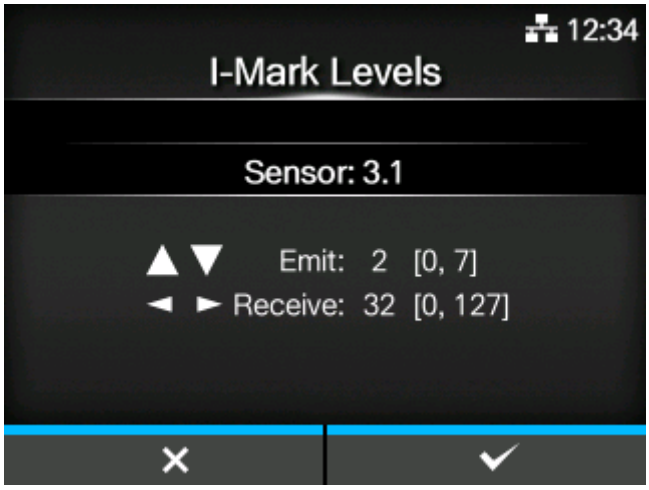

Manually set the I-mark sensor level.

The setting procedure is as follows:

First, adjust the "Low" level (voltage) of the I-mark sensor.

1. Pass the media (attached with liner) between the media sensors. Align it so that the media sensor does not detect the I-mark (black mark).
2. Close the print head. To get the correct adjustment result, adjust after you have closed the print head.
3. Select the [I-Mark Levels] in the [Calibrate] menu and press the button.
4. Press the / buttons to change the [Emit] value until the [Sensor] value is below 0.5 (V). Set the [Emit] value as low as possible.
5. If the [Sensor] value does not decrease below 0.5 after you changed the [Emit] value, press the / buttons to change the [Receive] value.
6. Take a note of the [Sensor] value from the above procedure. This is the "Low" level value for the I-mark sensor.

Next, check the "High" level (voltage) of the I-mark sensor as follows:

1. Pass the media between the media sensors so that the media sensor can detect the I-mark (black mark).
2. Close the print head.
3. Check the [Sensor] value.

   If the value is 1.0 (V) higher than the "Low" level value you have recorded, this is the "High" level value for the I-mark sensor.
   If the difference between the "High" and the "Low" levels is less than 1.0, adjust the [Emit] and [Receive] values so that the difference is more than 1.0, or adjust the "Low" level (voltage) of the I-mark sensor again.
4. If both "High" and "Low" levels comply with the standard value, press the button to confirm the value.

   The standard values for the "High" and "Low" levels for the I-mark sensor are as follows:

- Low (without I-mark) ≤ 0.5 (V)
- High (with I-mark) - Low ≥ 1.0 (V)

[I-Mark Slice Level]

Set the I-mark sensor slice level.

The setting procedure is as follows:

1. Use the following formula to calculate the slice level:

   (High level - Low level) x 0.7 + Low level = slice level
2. Select the [I-Mark Slice Level] in the [Calibrate] menu and press the button.
3. Press the / buttons to change the [Slice level] value. Set the [Slice level] to the slice level calculated in step 1.
4. Press the button to confirm the value.

- If you set the [Slice level] to 0.0 (V), the product sets the slice level automatically.

[Head Check]

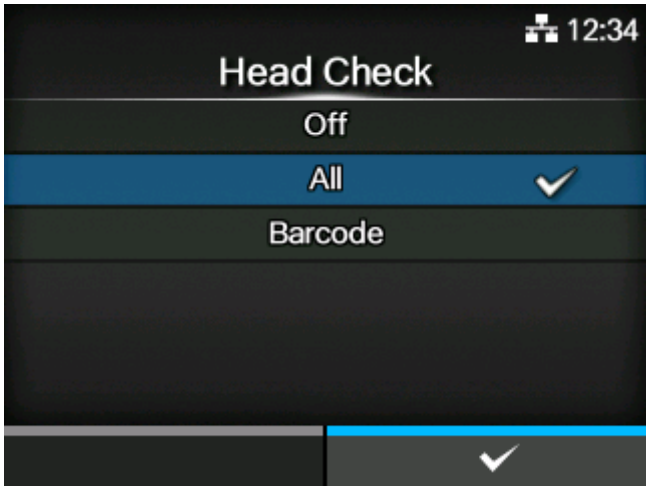

Automatically check if there is a broken element of the print head.

The options are as follows:

Off

Disable the Head Check.

All

Check the entire print area.

Barcode

Check only the area for printing a barcode. Head check is not applicable for barcodes printed as graphic data.

- Head check is a reference for checking for a broken element of the print head. This function does not guarantee barcode readability. A regular barcode reader test is required. When a void of printing got up, the head check function may not work immediately. Some gaps may occur.

  For the outputted label after the head error, perform the scanner reader of the printed barcode to check the label.

[Head Check Mode]

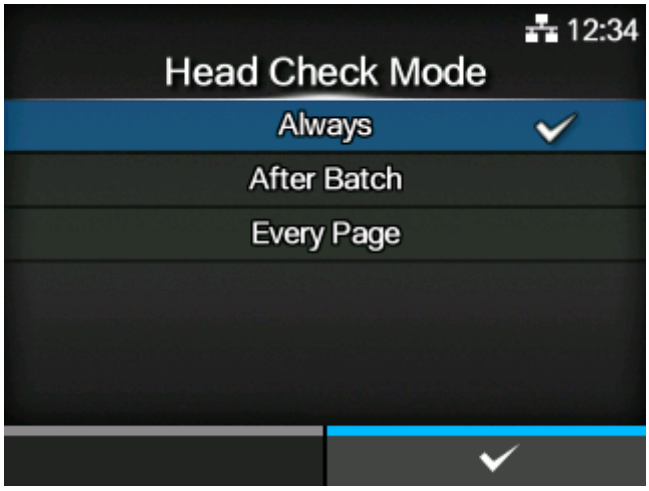

Set the method for head check.

Appears only if you have selected [All] or [Barcode] in the [Head Check] menu.

The options are as follows:

Always

Perform the head check for every item.

After Batch

The head check occurs before starting to print and when printing is stopped. If backfeed is applicable, the head check occurs before starting to print, when stopping to print and during the backfeed.

Every Page

Perform the head check for each specified number of media.

[Every Page]

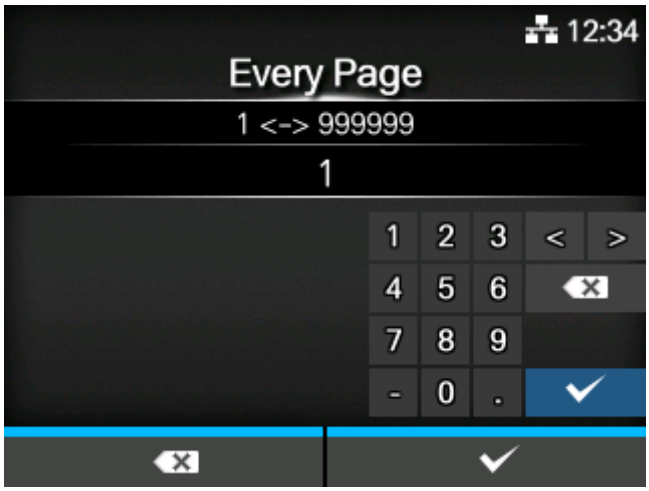

Perform the head check for each specified number of media.

Appears if you have selected [Every Page] in the [Head Check Mode] menu.

The setting range is from 1 to 999999.

[Check Media Size]

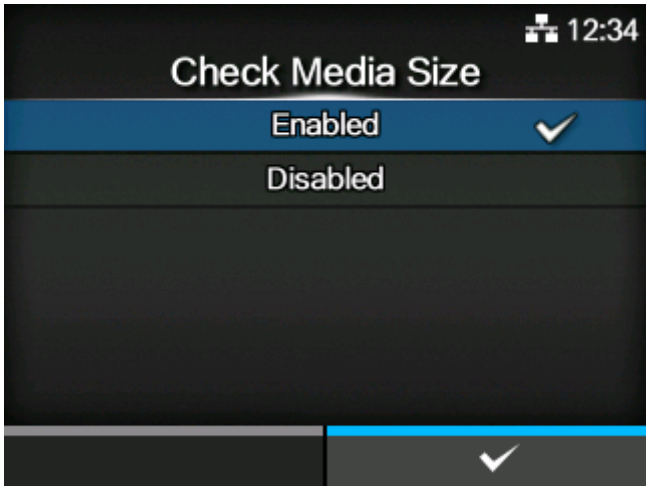

Enable or disable media size check.

By enabling this function, a "Media Error" appears under the following conditions.

- When the length of the media is 3 mm (0.12") longer than the media specified by the media size specification command ESC+A1
- When the length of the media currently being fed is 3 mm (0.12") longer compared to the media that was first fed after this function was enabled

The options are as follows:

Enabled

Enable media size check.

Disabled

Disable media size check.

[Adjustments]

Correct the offset position, print position and print darkness.

The setting items are as follows:

Offset

Adjusts the stop position for Dispense operation.

Pitch

Adjusts the leading edge of media position thus effects the vertical print position placement.

Darkness Adjust

Fine tune the print darkness.

[Offset]

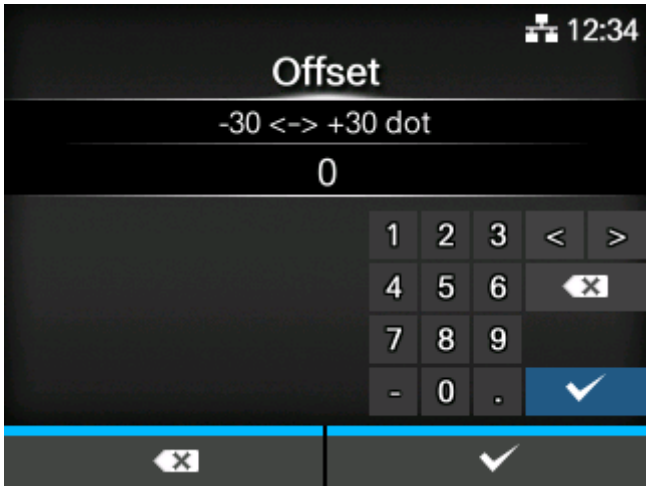

Correct the offset position.

Offset adjusts the stop position for Dispense operation.

Set the value '+' to move the offset position in the direction opposite to the feed direction and '-' to move in the feed direction.

The setting range varies depending on the print resolution of the product.

The setting range is as follows:

Resolution	Setting range
203 dpi (1 dot = 0.125 mm (0.0049"))	-30 to 0 to 30 dots
305 dpi (1 dot = 0.083 mm (0.0033"))	-45 to 0 to 45 dots

[Pitch]

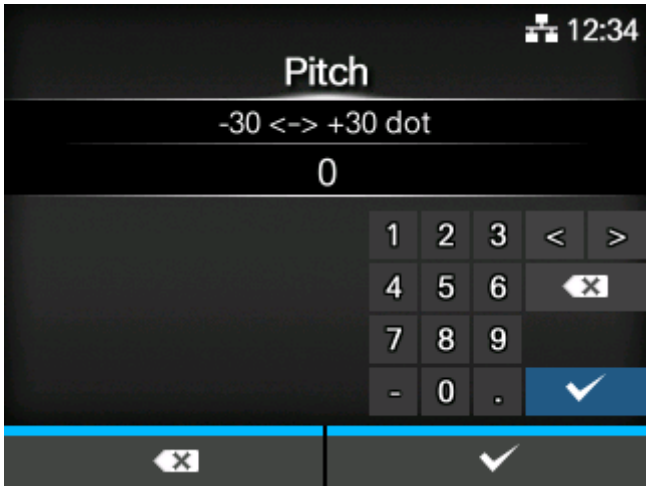

Pitch adjusts the leading edge of media position thus effects the vertical print position placement.

Set the value '+' to move print position in the direction opposite to the feed direction and '-' to move in the feed direction.

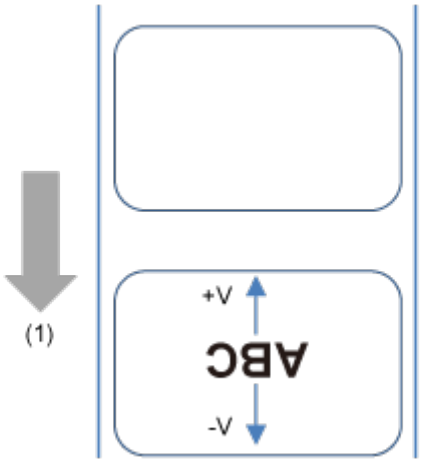

(1) Feed direction

The setting range varies depending on the print resolution of the product.

The setting range is as follows:

Resolution	Setting range
203 dpi (1 dot = 0.125 mm (0.0049"))	-30 to 0 to 30 dots
305 dpi (1 dot = 0.083 mm (0.0033"))	-45 to 0 to 45 dots

[Darkness Adjust]

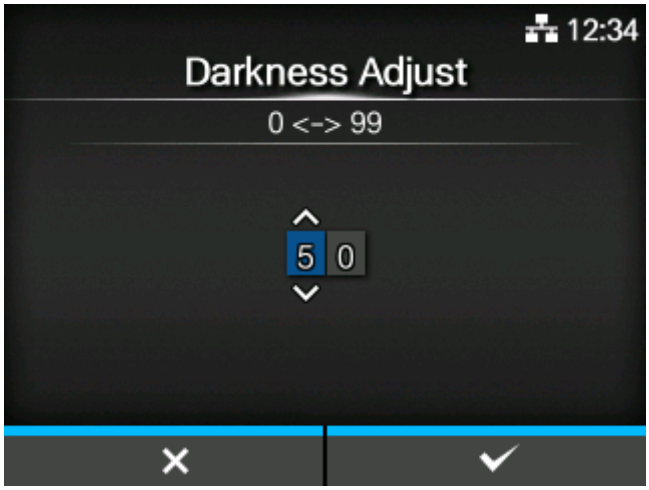

Fine tune the print darkness.

The setting range is from 0 to 99.

0 is the lightest and 99 is the darkest.

[Start Online]

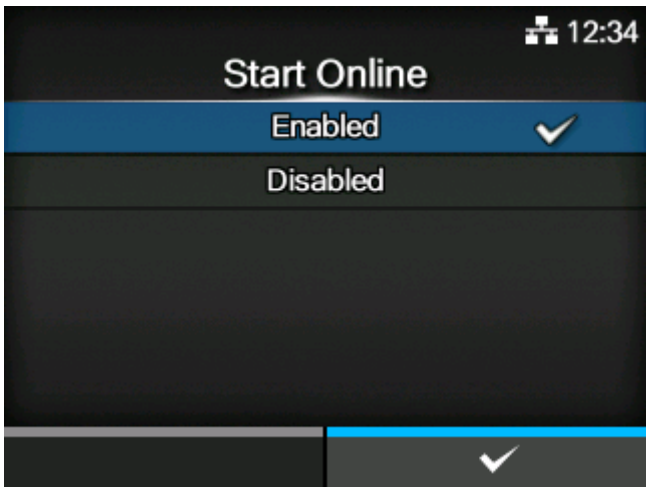

Select the default mode when the product is powered on.

The options are as follows:

Enabled

The product powers on in Online mode.

Disabled

The product powers on in Offline mode.

[Feed After Error]

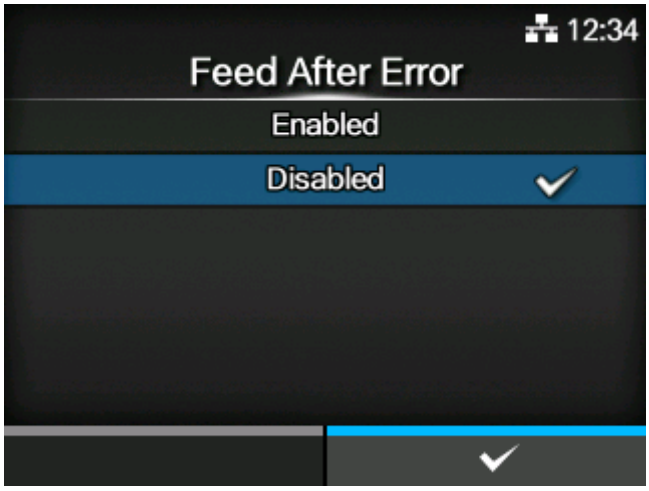

Set whether to automatically feed the media when recovering from an error and changing to Online mode.

The options are as follows:

Enabled

Feed the media when changing to Online mode after recovering from an error.

Disabled

Do not feed the media when changing to Online mode after recovering from an error.

However, if [Enabled] is selected in the [Feed At Power On] menu, the product feeds the media when it is powered on and changes to Online mode.

[Feed At Power On]

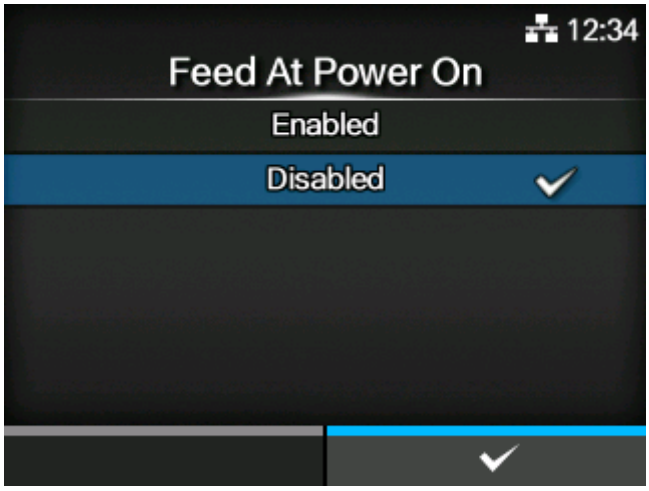

Set whether to automatically feed the media when the product is powered on.

The options are as follows:

Enabled

Feed the media when the product is powered on.

Disabled

Do not feed the media when the product is powered on.

However, if [Enabled] is selected in the [Feed After Error] menu, the product feeds the media when it is powered on and changes to Online mode.

[Finisher Feed]

Set the amount of media that is fed when dispensing stops. Set the media feed amount based on the print head position of 0.

The actual media feed amount is the value of [Offset] + [Finisher Feed].

The setting range varies depending on the print resolution of the product.

The setting range is as follows:

Resolution	Setting range
203 dpi (1 dot = 0.125 mm (0.0049"))	0 to 2040 dots
305 dpi (1 dot = 0.083 mm (0.0033"))	0 to 3060 dots

- To modify this setting, contact your SATO sales representative.

[Paper End]

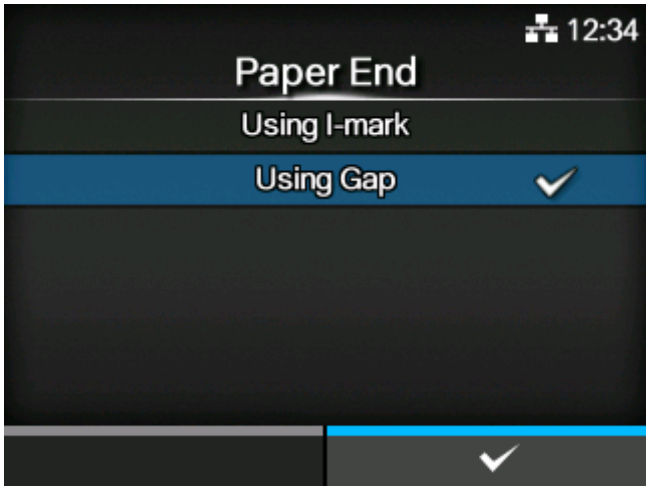

Select the sensor for sensing the paper end.

The options are as follows:

Using I-mark

Use the I-mark sensor (reflective type) to detect the paper end.

Using Gap

Use the Gap sensor (transmissive type) to detect the paper end.

[Prioritize]

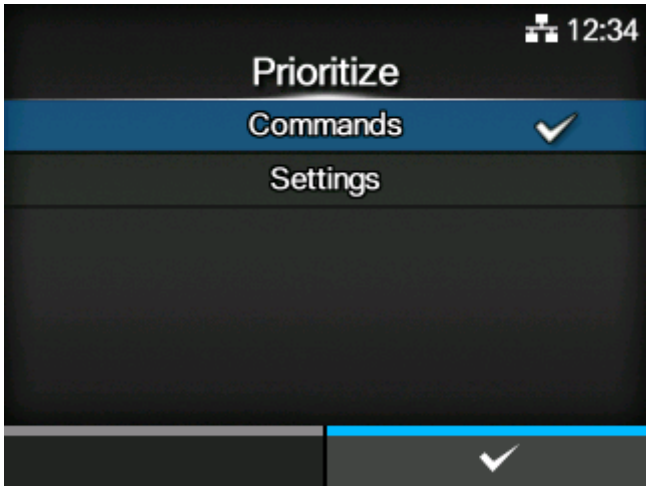

For product settings, set whether to prioritize the settings that are done through the product or through commands.

The options are as follows:

Commands

Prioritize the settings through commands.

Settings

Prioritize the settings that are done through the product.

[Reprint]

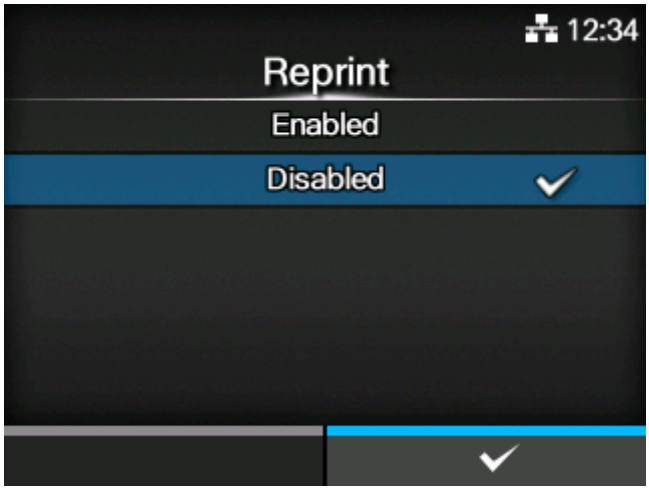

Enable or disable the reprint function.

The options are as follows:

Enabled

Enable the reprint function.

Disabled

Disable the reprint function.

If you have selected [Enabled] in [Reprint], you can press the button ([REPRINT]) on the Online screen to print the previous data again.

- The previous data will be lost if you power off the product.

[Print End Position]

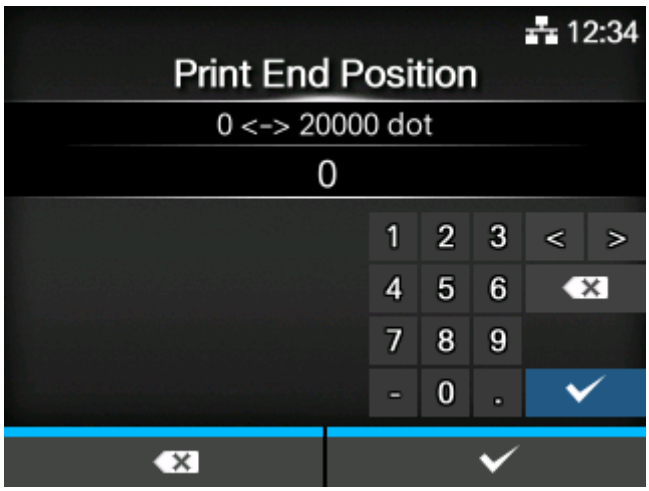

Adjust the stop position of the media. This adjustment also sets the blank amount from the media stop position.

The setting range varies depending on the print resolution of the product.

The setting range is as follows:

Resolution	Setting range
203 dpi (1 dot = 0.125 mm (0.0049"))	0 to 20000 dots
305 dpi (1 dot = 0.083 mm (0.0033"))	0 to 18000 dots

[Label Near End]

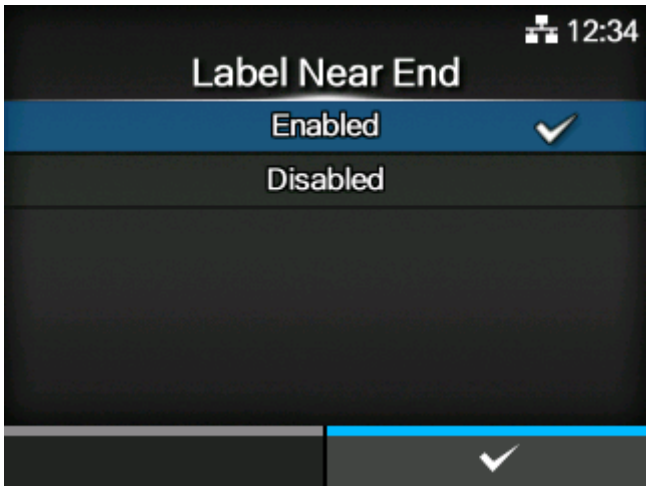

Shows or does not show the warning icon and lights or does not light the warning lamp when the media is about to run out. Also, sets the operation that is output via the external output signal for [Media Remaining Amount]. Printing does not stop even if the warning icon appears or the warning lamp lights.

The options are as follows:

Enabled

Shows the warning icon and lights the warning lamp and [Media Remaining Amount] is output externally.

Disabled

Does not show the warning icon nor light the warning lamp and [Media Remaining Amount] is not output externally.

- The warning icon is shown in the status bar on the upper part of the screen.

[Receive After Reset]

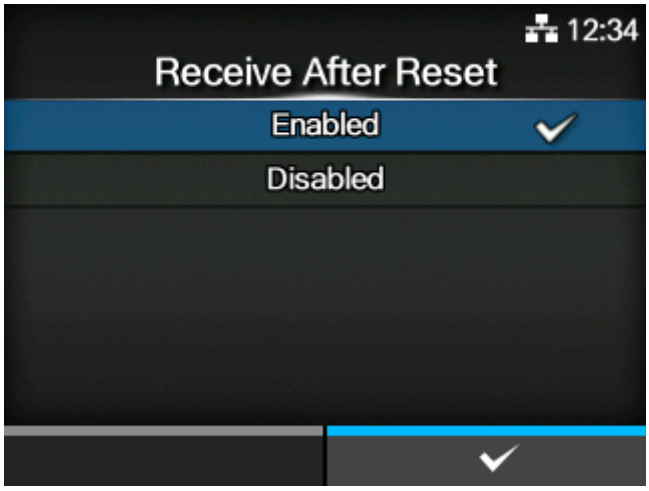

Set whether to automatically go online when recovering from a reset and switching to Online mode.

The options are as follows:

Enabled

If stopped due to an error on the applicator, do an error reset to make reception possible (online) automatically.

Disabled

If stopped due to an error on the applicator, do an error reset to go offline.

[Feed After Error Message]

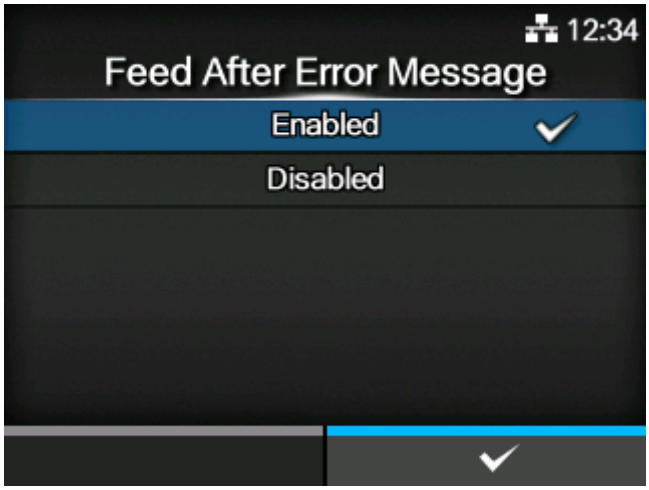

Set whether to show the "Press Feed" message after recovering from an error, for errors that can be recovered from by opening and closing the head.

The options are as follows:

Enabled

Paper feed is required. The "Press Feed" message appears.

Disabled

Paper feed is optional. The "Press Feed" message does not appear.

[Job Name Display]

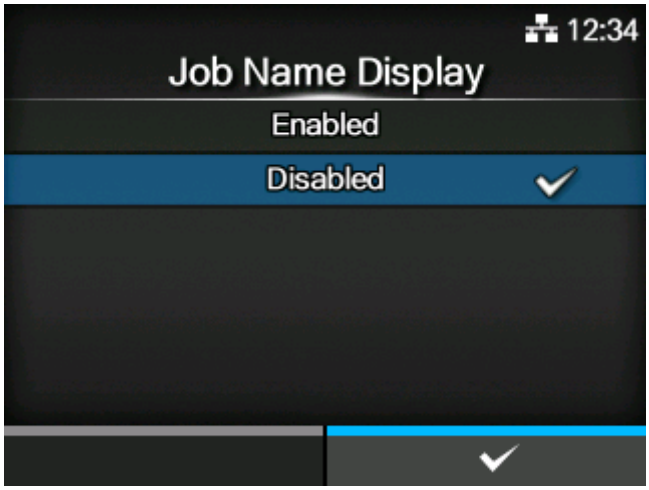

Set whether to show the name of the job on the display when the received data includes the job name specification command ESC+WK.

The options are as follows:

Enabled

Shows the name of the job.

- When [Show Total Count] is disabled

  QTY: Remaining quantity (job name)

- When [Show Total Count] is enabled

  QTY from reception to application complete: Remaining quantity (job name)
  QTY after application is complete: Remaining quantity (total count)

Disabled

Does not show the name of the job.

[Virtual Sensor Position]

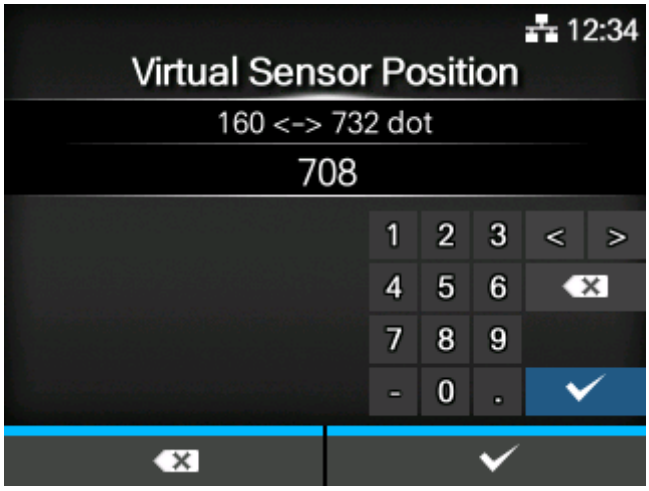

Input the virtual dimension from the media sensor to the print head to use the virtual sensor function to adjust the feed capacity.

The setting range varies depending on the resolution.

The setting range is as follows:

Resolution	Setting range
203 dpi (1 dot = 0.125 mm (0.0049"))	160 to 732 dots
305 dpi (1 dot = 0.083 mm (0.0033"))	240 to 1098 dots

[Print Start Position]

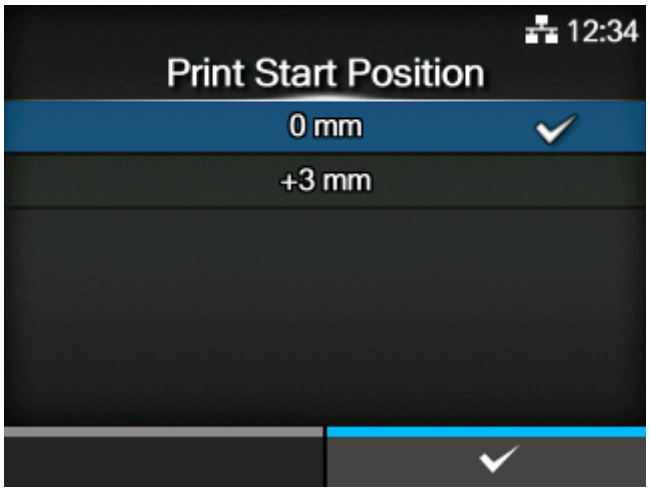

If you have selected [I-Mark] in the [Sensor Type] menu, set the reference position to start printing.

The options are as follows:

0 mm

Operates with the following edge of the I-mark as the position to start printing.

+3 mm

Operates with 3 mm (0.12") in front of the following edge of the I-mark as the position to start printing.

[Ribbon Near End Level]

Select the amount of ribbon remaining when the end of the ribbon is detected.

The options are as follows:

Short

Detected at about 5 to 15 m (16.40 to 49.21 feet).

Standard

Detected at about 15 to 25 m (49.21 to 82.02 feet).

Long

Detected at about 25 to 30 m (82.02 to 98.43 feet).

- The amount of ribbon remaining is only for reference. The timing of ribbon near end varies depending on the ribbon thickness and the reading status of the ribbon sensor.

[Paper End Output Timing]

Sets the timing for when a paper end occurs.

The options are as follows:

Print Standard

An error occurs when a paper end occurs.

Apply Standard

An error occurs after the printing and application operations are complete.

[Ribbon End Sensor]

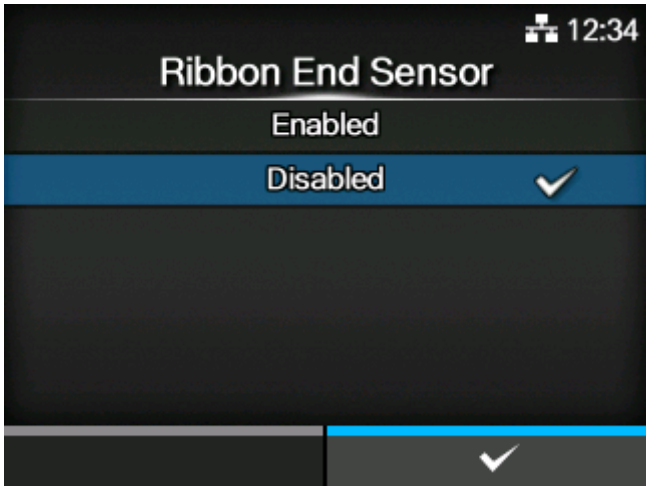

Sets whether a ribbon end error occurs when the end of the ribbon is detected by the ribbon end sensor (option).

The options are as follows:

Enabled

Sets whether a ribbon end error occurs when the end of the ribbon is detected.

Disabled

Does not detect the end of ribbons.

- You can set this if you have installed the optional ribbon end sensor.

[Label End Sensor]

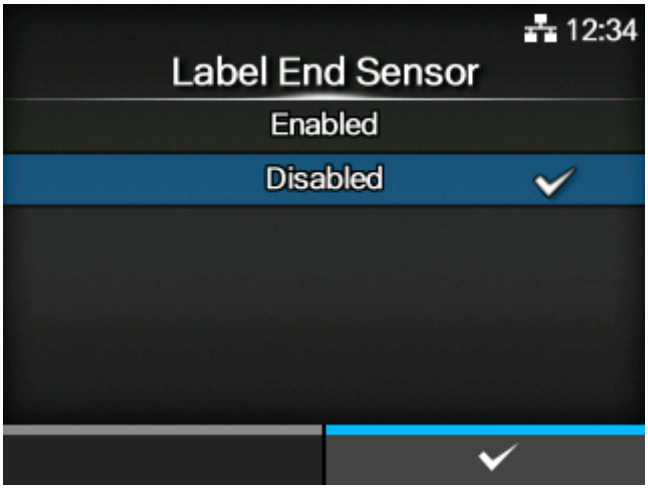

Sets whether to detect the end of labels with the label end sensor (option).

The options are as follows:

Enabled

Detects the end of labels.

Disabled

Does not detect the end of labels.

- You can set this if you have installed the optional label end sensor.
- When the end of the labels is detected, the warning lamp lights yellow, and a [Label End] signal is output to the external output terminal.
- The product does not stop operating, even if the end of the labels is detected.

[Interface] Menu

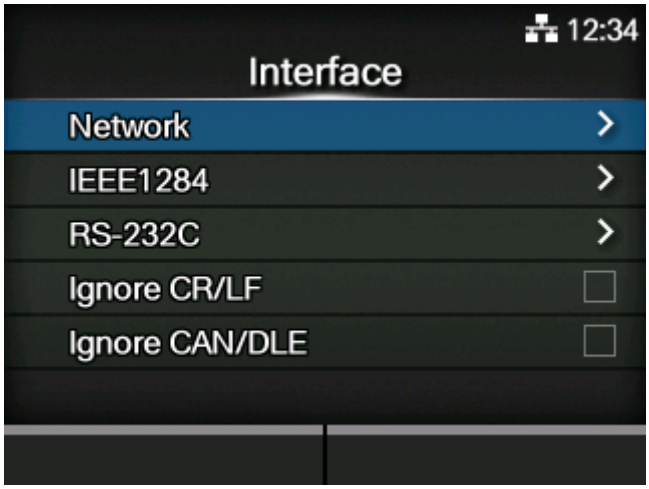

The following settings are available in the [Interface] menu:

Network

Set the LAN connection.

IEEE1284

Set the IEEE1284 connection.

RS-232C

Set the RS-232C connection.

Ignore CR/LF

Set to ignore CR/LF codes.

Ignore CAN/DLE

Set to ignore CAN/DLE codes.

[Network]

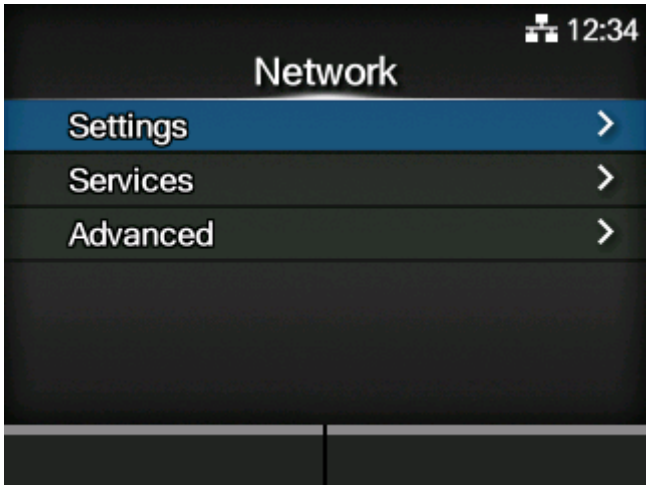

This menu is for using LAN for the interface between the computer and the product.

The setting items are as follows:

Settings

Set LAN, or select an interface.

Services

Set the TCP/IP port number, NTP, LPD, FTP, SNMP, or SOS (SATO Online Services).

Advanced

Set the advanced function for the interface.

[Settings]

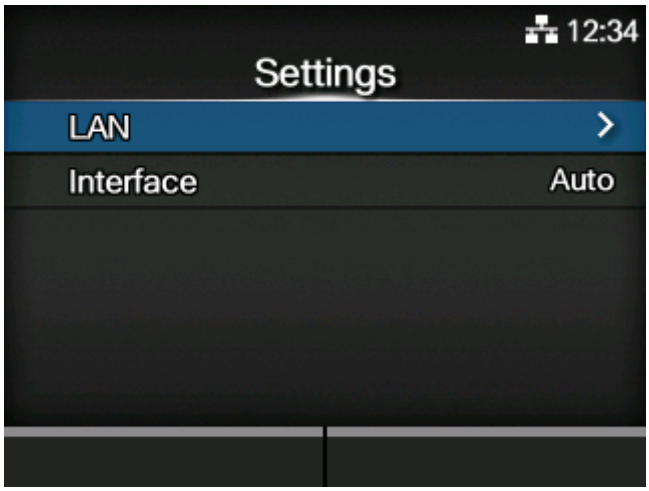

Set the LAN.

The setting items are as follows:

LAN

Set the LAN.

Interface

Select the network interface.

[LAN]

Set the IPv4, IPv6 or proxy for the LAN.

The setting items are as follows:

IPv4

Set the IPv4 for the LAN.

IPv6

Set the IPv6 for the LAN.

Proxy

Set the proxy for the LAN.

[IPv4]

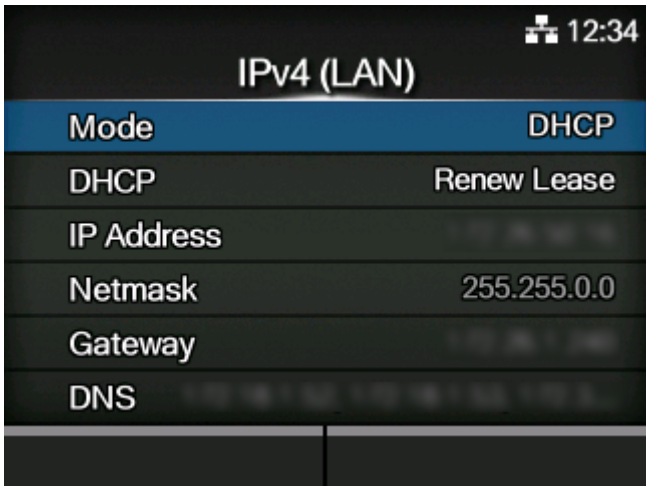

Set IPv4 for the LAN.

The setting items are as follows:

Mode

Select the IP address assignment method.

DHCP/Renew Lease

Update the lease time and get the IP address from the DHCP server again.

- Appears only if you have selected [DHCP] in the [Mode] menu and LAN is the active interface.

IP Address

Set and check the IP address.

If you have selected [DHCP] in the [Mode] menu, the screen shows the IP address you received from the DHCP server.

If you have selected [Static] in the [Mode] menu, select this to set the IP address.

Netmask

Set and check the subnet mask address.

If you have selected [DHCP] in the [Mode] menu, the screen shows the subnet mask address you received from the DHCP server.

If you have selected [Static] in the [Mode] menu, select this to set the subnet mask address.

Gateway

Set and check the default gateway address.

If you have selected [DHCP] in the [Mode] menu, the screen shows the gateway address you received from the DHCP server.

If you have selected [Static] in the [Mode] menu, select this to set the default gateway address.

DNS

Set and check DNS server addresses.

If you have selected [Static] in the [Mode] menu, select this to set and check DNS server addresses.

- After doing the settings, press the button to enable the new settings. Press the button to cancel the new settings and return to the previous settings.

- You cannot change [IP Address], [Netmask], [Gateway], or [DNS] when [Mode] is [DHCP].

[Mode]

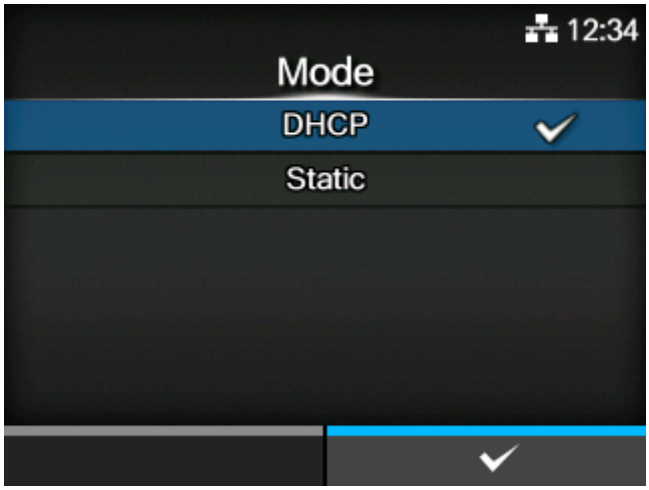

Select the IP address assignment method.

The options are as follows:

DHCP

Automatically retrieve the IP address, gateway and subnet mask from the DHCP server.

Static

Manually set the IP address, gateway and subnet mask.

[IP Address]

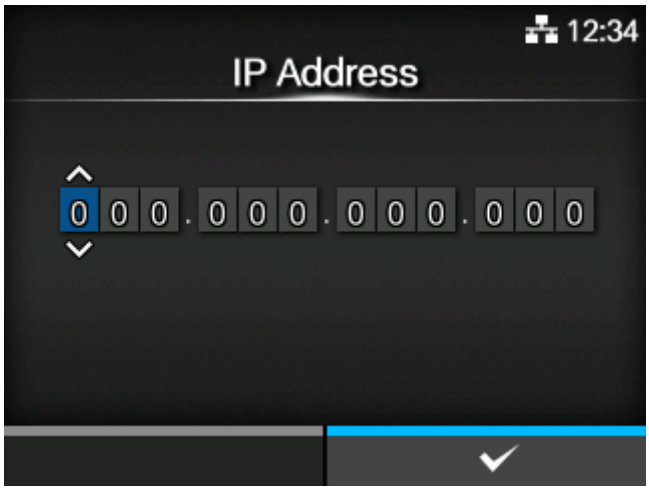

If you have selected [Static] in the [Mode] menu, set the IP address.

The setting range is as follows:

000.000.000.000 to 255.255.255.255

[Netmask]

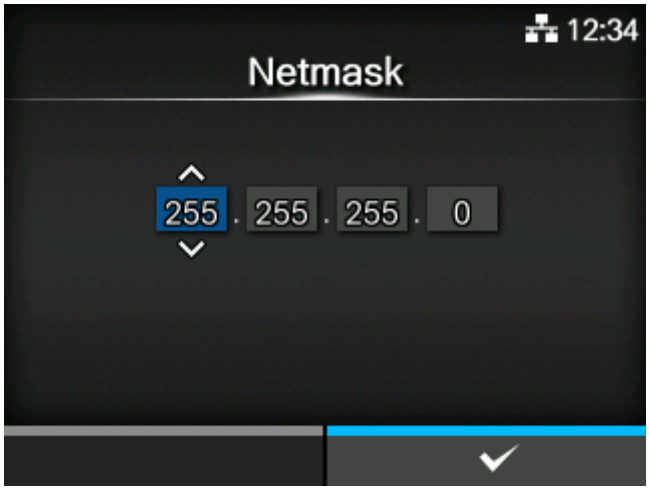

If you have selected [Static] in the [Mode] menu, set the subnet mask address.

Each group of the address can be set cyclically among 0, 128, 192, 224, 240, 248, 252, 254 and 255.

The setting range is as follows:

128.000.000.000 to 255.255.255.254

[Gateway]

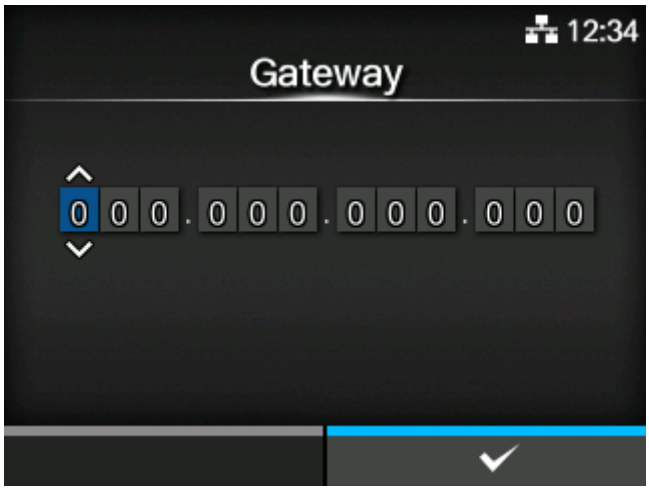

If you have selected [Static] in the [Mode] menu, set the default gateway address.

The setting range is as follows:

000.000.000.000 to 255.255.255.255

[DNS]

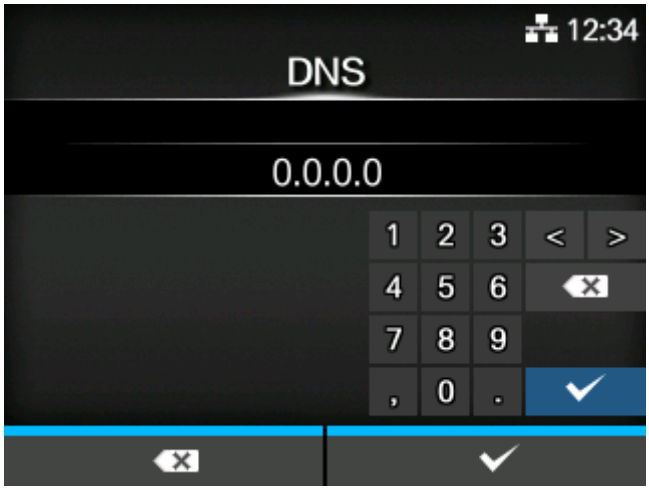

If you have selected [Static] in the [Mode] menu, set and check DNS server addresses.

The setting range is as follows:

000.000.000.000 to 255.255.255.255

- You can register up to three IP addresses for the DNS server. Use a comma to delimit different IP addresses.

[IPv6]

Set the IPv6 for the LAN.

The setting items are as follows:

Mode

Select the IP address assignment method or disable IPv6.

DHCP/Renew Lease

Update the lease time and get the IP address from the DHCP server again.

- Appears only if you have selected [DHCP] in the [Mode] menu.

IP Address

Set and check the IP address.

If you have selected [DHCP] in the [Mode] menu, the screen shows the IP address you received from the DHCP server.

If you have selected [Static] in the [Mode] menu, select this to set the IP address.

Prefix Length

Set and check the prefix.

Gateway

Set and check the default gateway address.

If you have selected [DHCP] in the [Mode] menu, the screen shows the gateway address you received from the DHCP server.

If you have selected [Static] in the [Mode] menu, select this to set the default gateway address.

DNS

Set and check the address of the primary DNS server.

If you have selected [Static] in the [Mode] menu, select to set the primary address of the DNS server.

- After doing the settings, press the button to enable the new settings. Press the button to cancel the new settings and return to the previous settings.

- You cannot change [IP Address], [Prefix Length], [Gateway], or [DNS] if [Mode] is anything other than [Static].

[Mode]

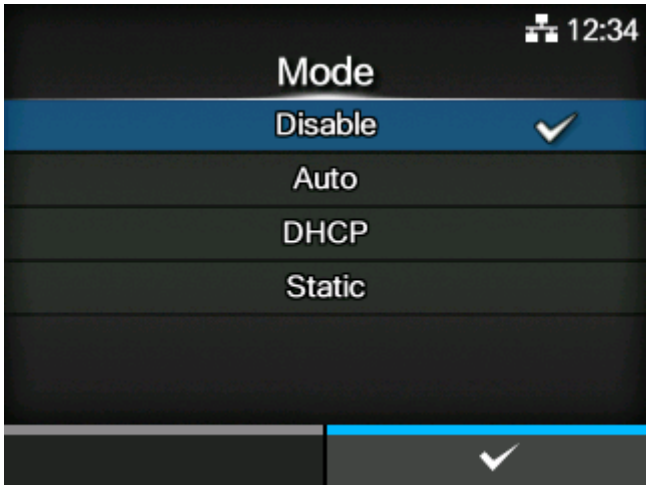

Select the IP address assignment method or disable IPv6.

The options are as follows:

Disable

Disable IPv6.

Auto

Automatically generate the IP address and gateway (stateless mode).

DHCP

Automatically retrieve the IP address and gateway from the DHCP server (stateful mode).

Static

Manually set the IP address, gateway and prefix length.

[IP Address]

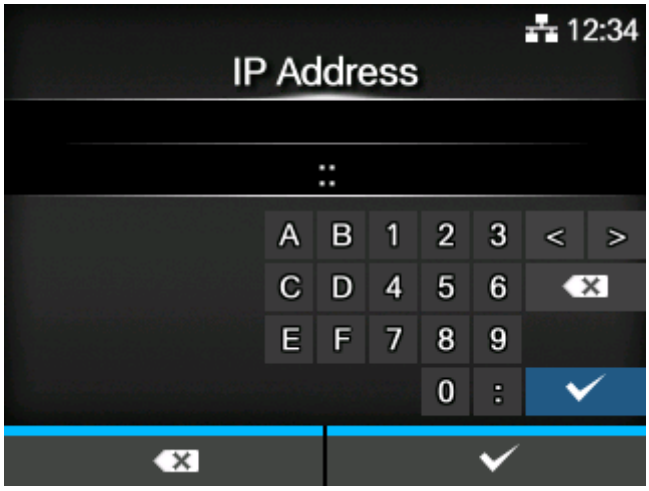

If you have selected [Static] in the [Mode] menu, set the IP address.

The setting range is as follows:

0:0:0:0:0:0:0:1 to ffff:ffff:ffff:ffff:ffff:ffff:ffff:ffff

[Prefix Length]

If you have selected [Static] in the [Mode] menu, set the prefix.

The setting range is from 1 to 128.

[Gateway]

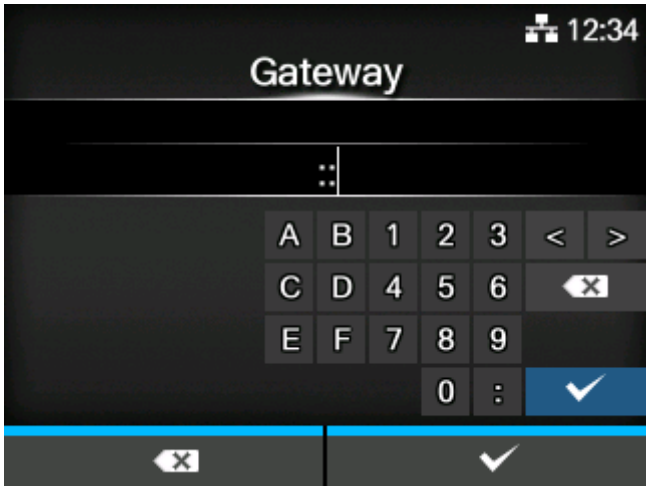

If you have selected [Static] in the [Mode] menu, set the default gateway address.

The setting range is as follows:

0:0:0:0:0:0:0:0 to ffff:ffff:ffff:ffff:ffff:ffff:ffff:ffff

[DNS]

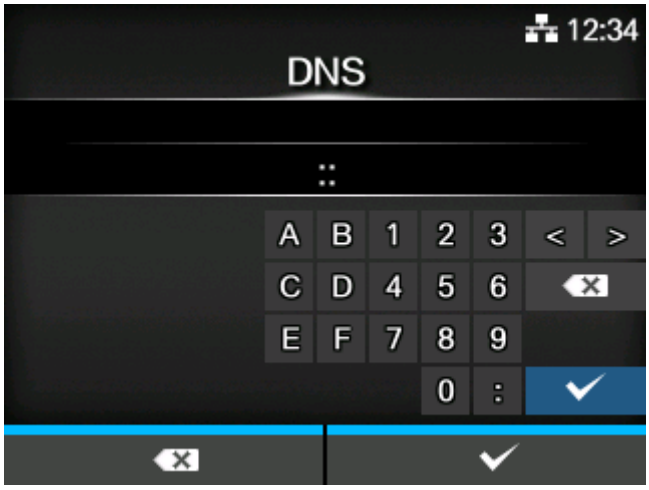

If you have selected [Static] in the [Mode] menu, set the primary address of the DNS server.

The setting range is as follows:

0:0:0:0:0:0:0:0 to ffff:ffff:ffff:ffff:ffff:ffff:ffff:ffff

- You can register only one IP address for the DNS server for IPv6.

[Proxy]

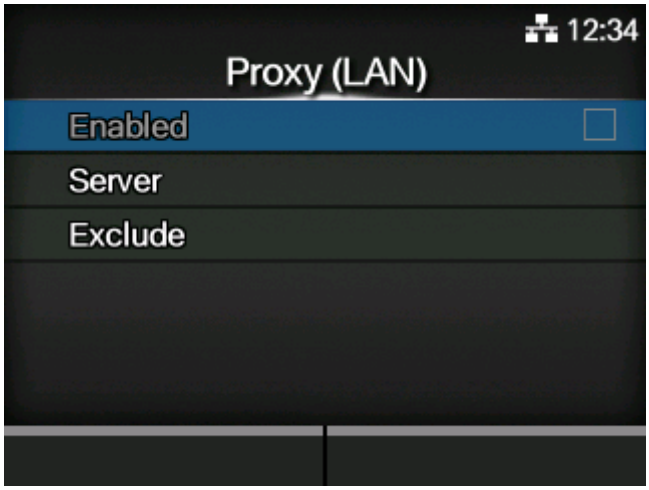

Set the proxy for the LAN.

The setting items are as follows:

Enabled

Enable or disable use of proxy.

Server

Set the proxy server address.

Exclude

Exclude the proxy from usage.

[Enabled]

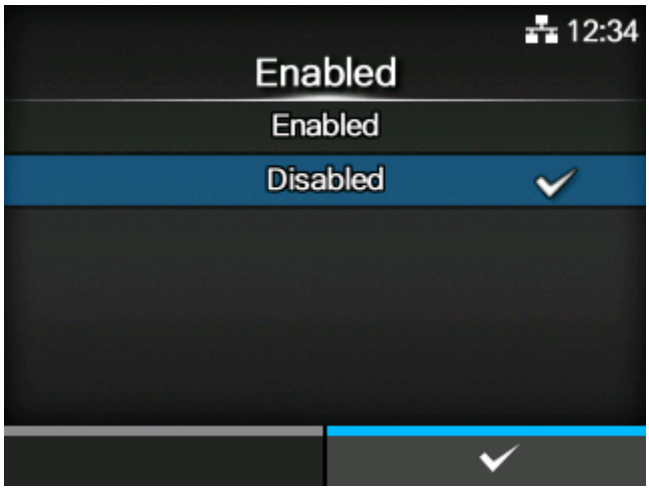

Enable or disable use of proxy.

The options are as follows:

Enabled

Enable proxy server usage.

Disabled

Disable proxy server usage.

- To enable the proxy, [Server] should be set and [Exclude] must contain at least 127.0.0.1 and localhost.

[Server]

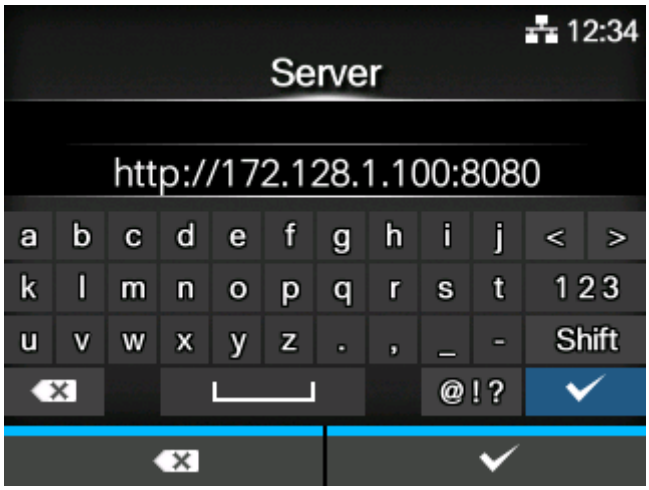

Set the name or IP address of the proxy server.

Example of input) 172.128.1.100:8080

- Separate the IP address and port number with a colon (:).
- Server should be set with a valid name or IP address and port number.

[Exclude]

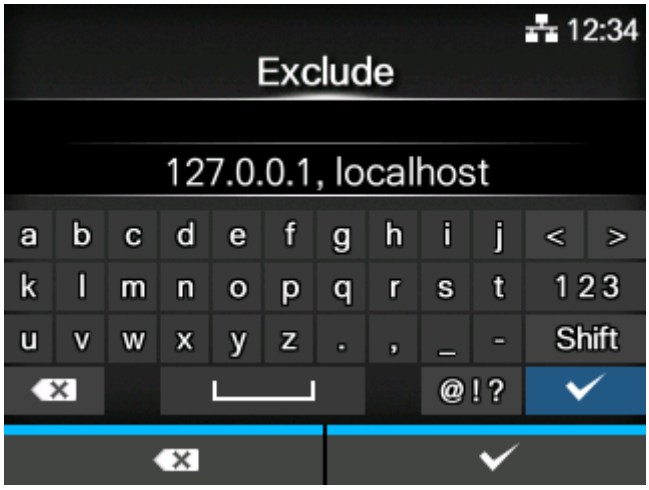

Set names, IP addresses or domains for the proxy to exclude.

- Exclude must contain at least 127.0.0.1 and localhost.

[Interface]

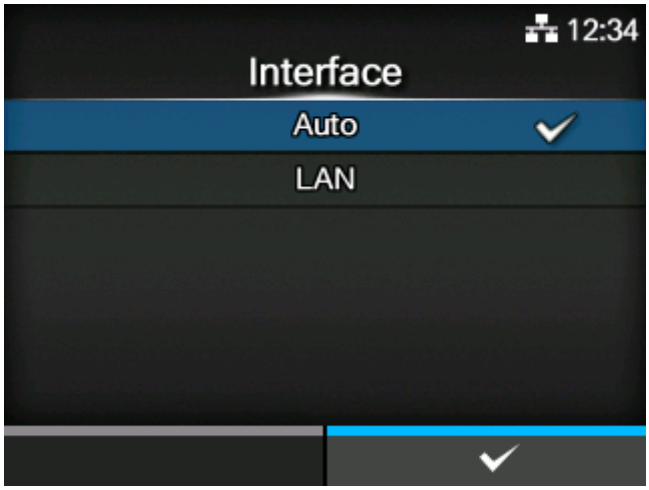

Select the network interface.

The options are as follows:

Auto

Set whether to automatically select this when the product is powered on. LAN is selected if a LAN cable is connected to a link-established hub (link LED is flashing) at product startup.

LAN

Use LAN interface (or force LAN interface).

- A message prompting you to restart the product will appear on the Online/Offline screen if you have made any changes. In such a case, reboot the product to apply the settings.

[Services]

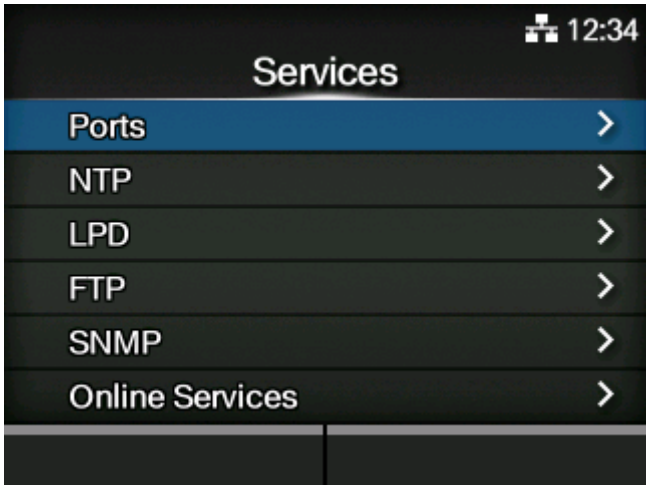

Set the TCP/IP port number, NTP, LPD, FTP, SNMP, or SOS (SATO Online Services).

The setting items are as follows:

Ports

Set the TCP/IP port number.

NTP

Set the functions for NTP.

LPD

Set the functions for LPD.

FTP

Set the functions for FTP.

SNMP

Set the functions for SNMP.

Online Services

Set the functions for SOS (SATO Online Services).

[Ports]

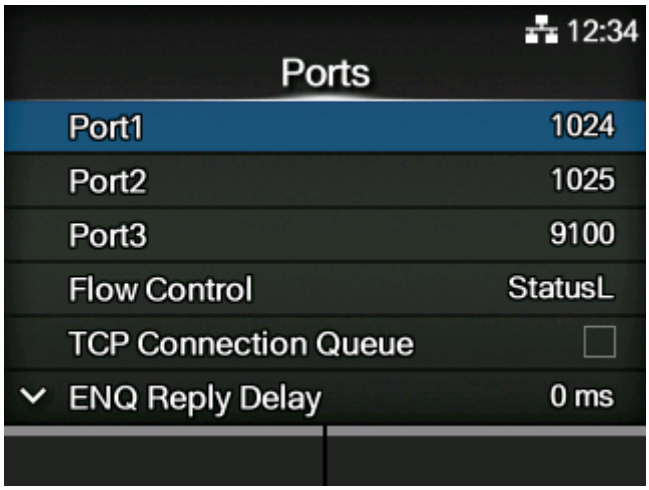

Set the TCP/IP port number.

The setting items are as follows:

Port1

Set the port number of Port1.

For the two-port connection of Status4, this port is used for receiving print data. For the one-port connection of StatusL/Status3/Status5, this port is used for both receiving print data and returning the product status.

Port2

Set the port number of Port2.

For the two-port connection of Status4, this port is used for returning the product status.

Port3

Set the port number of Port3.

For the one-port connection of StatusL/Status3/Status4/Status5, this port is used for both receiving print data and returning the product status.

Flow Control

Set the communication protocol.

TCP Connection Queue

Set whether to allow queuing for connection when multiple hosts or applications are sending connection requests to the product.

Legacy Status for Port 9100

Set whether to change the return status format of Port3 to legacy status.

- Does not appear if you have selected [None] or [StatusL] in the [Flow Control] menu.

ENQ Reply Delay

Set the period to delay status reply to status request ENQ.

- Not available if you have selected [Status4] in the [Flow Control] menu.

Status4 Cyclic Response

Set the interval for the cyclic status response.

- Available only if you have selected [Status4] in the [Flow Control] menu.

BCC

Set the BCC check function.

- Appears only if you have selected [Status5] in the [Flow Control] menu.

StatusL

Sets the status of the applicator error.

- Appears only if you have selected [StatusL] in the [Flow Control] menu.

Roles of Port1 to Port3

In the socket server function of TCP/IP, either of the following connection methods can be used.

The ports to be used and their roles change depending on the connection method and communication protocol.

Two-port connection

Port1 is used for receiving print data, and Port2 is used for returning the product status.

Two-port connection is available when the communication protocol is Status4.

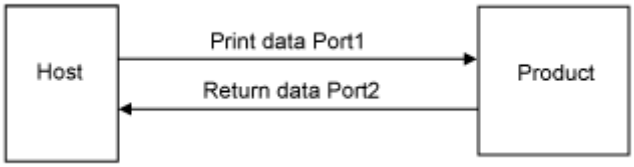

One-port connection

One port is used for both receiving print data and returning the product status.

When the communication protocol is Status4, Port3 is used.

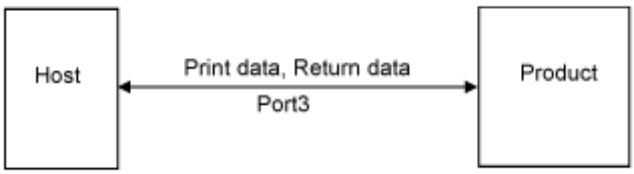

When the communication protocol is StatusL, Status3, or Status5, Port1 or Port3 is used.

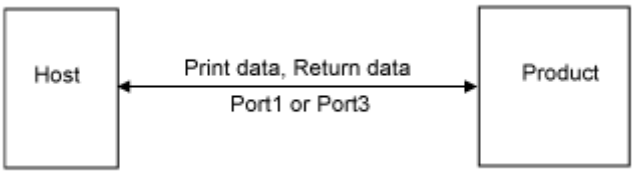

[Port1]

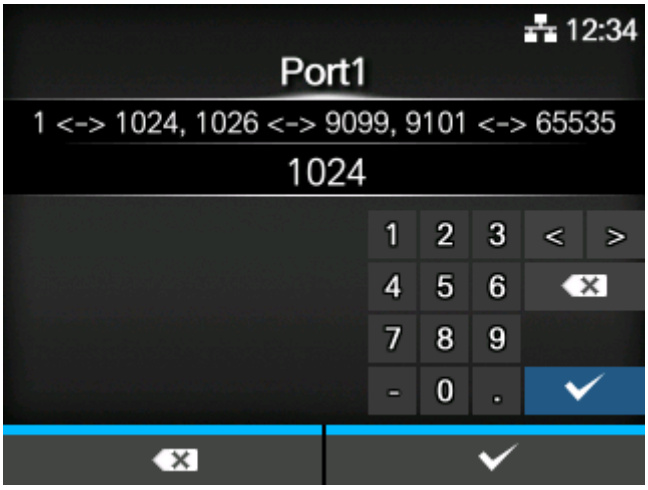

Set the port number of Port1.

For the two-port connection of Status4, this port is used for receiving print data. For the one-port connection of StatusL/Status3/Status5, this port is used for both receiving print data and returning the product status.

The setting range is from 1 to 65535.

- Each port (1, 2 and 3) must be set to different values.

[Port2]

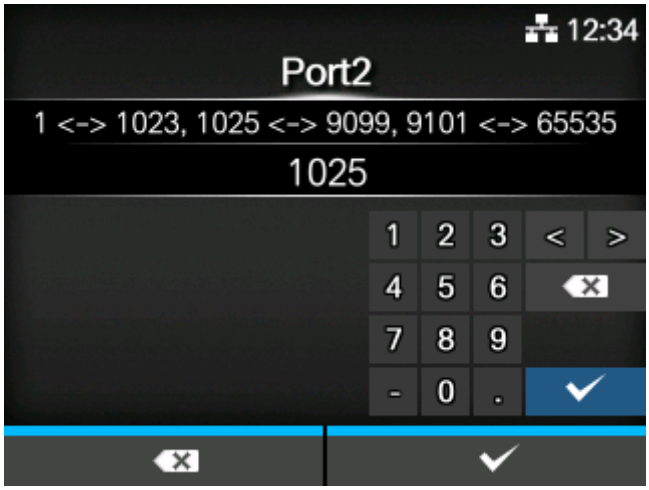

Set the port number of Port2.

For the two-port connection of Status4, this port is used for returning the product status.

The setting range is from 1 to 65535.

- Each port (1, 2 and 3) must be set to different values.

- This setting is disabled when AEP mode is enabled.

[Port3]

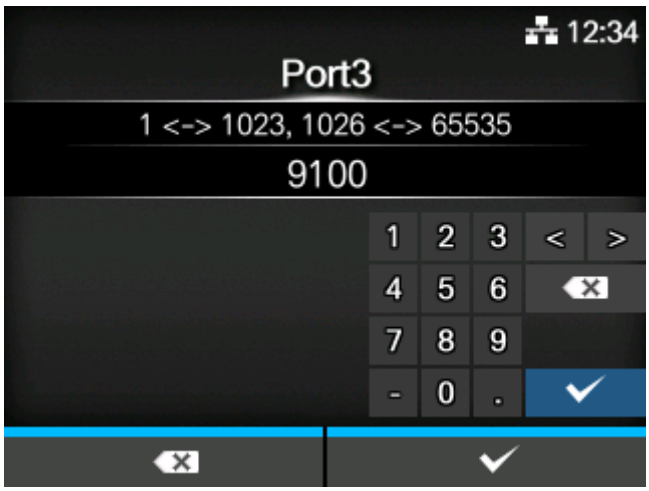

Set the port number of Port3.

For the one-port connection of StatusL/Status3/Status4/Status5, this port is used for both receiving print data and returning the product status.

The setting range is from 1 to 65535.

- Each port (1, 2 and 3) must be set to different values.

- You can change the return status format of port3 to Compatible mode by enabling [Legacy Status for Port 9100].

[Flow Control]

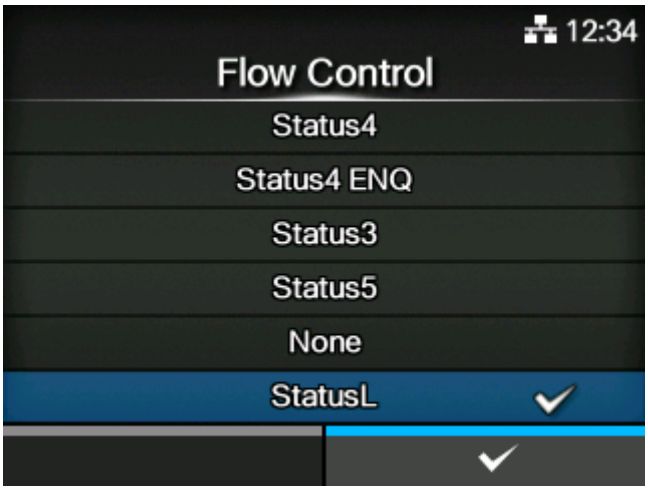

Set the communication protocol.

The options are as follows:

- [Status4]
- [Status4 ENQ]
- [Status3]
- [Status5]
- [None]
- [StatusL]

- If [StatusL] is set in [Flow Control] for any one of network/IEEE1284/RS-232C in the [Interface] menu, [Applications] > [Applicator] > [Detailed Setting] > [Item Completion Condition] is fixed at [Apply End] and the setting cannot be changed.
- To set [Item Completion Condition] to [Print End], change all the [Flow Control] settings of network/IEEE1284/RS-232C in the [Interface] menu to the status other than [StatusL], and then set [Item Completion Condition] to [Print End].

[TCP Connection Queue]

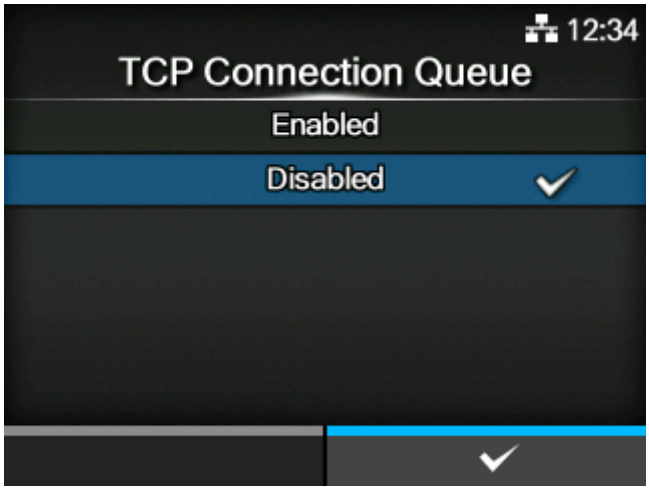

Set whether to allow queuing for connection when multiple hosts or applications are sending connection requests to the product.

The options are as follows:

Enabled

While connecting with one host or application, the product can receive connection requests from other hosts or applications. The subsequent connection requests are put on hold, and processed in order of reception after the first connection is closed.

Disabled

While connecting with one host or application, the product cannot receive connection requests from other hosts or applications.

- When you have selected [Enabled], be sure to use one port connection for Status3, Status4, Status5, and StatusL. Operation using two port connections for Status4 is not guaranteed.

[Legacy Status for Port 9100]

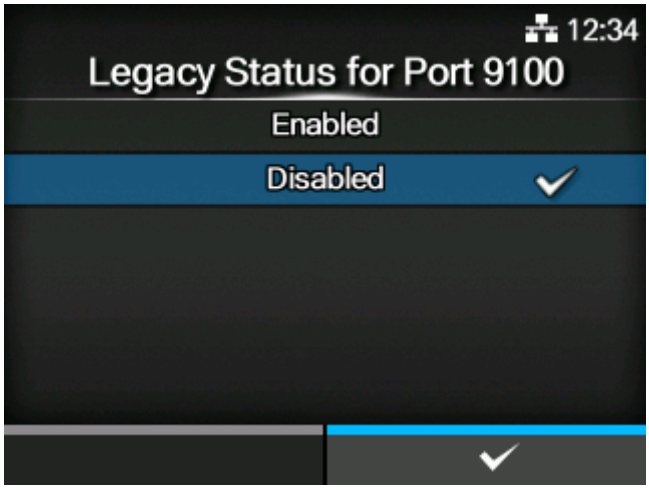

Set whether to change the return status format of port3 to legacy status.

Does not appear if you have selected [None] or [StatusL] in the [Flow Control] menu.

The options are as follows:

Enabled

Change the return status format of port3 to legacy status.

Disabled

Do not change the return status format of port3 to legacy status.

In legacy status, the return status format of port3 becomes as follows:

Status3

Mode	Data format
Normal ([Legacy Status for Port 9100] is [Disabled])	ACK/NAK Reply ACK/NAK (1 byte) Status Reply STX | Status3 | ETX (11 bytes)
Legacy status ([Legacy Status for Port 9100] is [Enabled])	ACK/NAK Reply ACK/NAK (1 byte) Status Reply 00 00 00 0b | STX | Status3 | ETX (15 bytes)

Status4

Mode	Data format
Normal ([Legacy Status for Port 9100] is [Disabled])	ACK/NAK Reply 00 00 00 01 | ACK/NAK (5 bytes) Status Reply 00 00 00 1C | ENQ | STX | Status4 | ETX (32 bytes)
Legacy status ([Legacy Status for Port 9100] is [Enabled])	ACK/NAK Reply ACK/NAK (1 byte) Status Reply 00 00 00 20 | 00 00 00 1C | ENQ | STX | Status4 | ETX (36 bytes)

Status5

Mode	Data format
Normal ([Legacy Status for Port 9100] is [Disabled])	ACK/NAK Reply No Reply Status Reply STX | Status5 | ETX | 22 bytes
Legacy status ([Legacy Status for Port 9100] is [Enabled])	ACK/NAK Reply No Reply Status Reply 00 00 00 16 | STX | Status5 | ETX | 26 bytes

[ENQ Reply Delay]

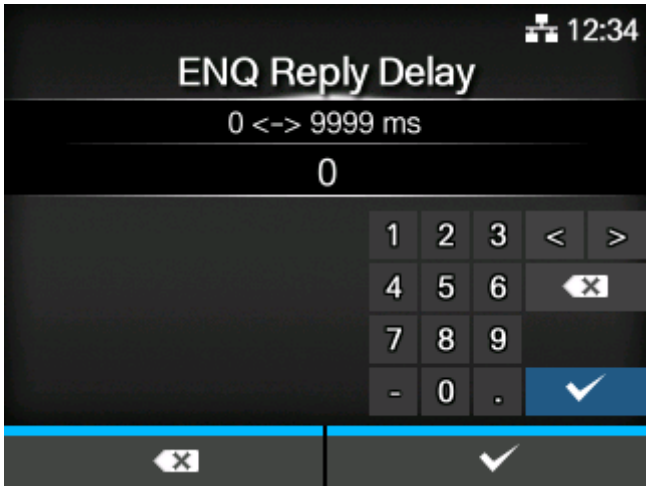

Set the period to delay status reply to status request ENQ.

The target interface is LAN.

The target statuses are Status3, Status4 ENQ reply, Status5, and StatusL.

The setting range is from 0 to 9999 ms.

- Normally, keep this setting at the default value.

[Status4 Cyclic Response]

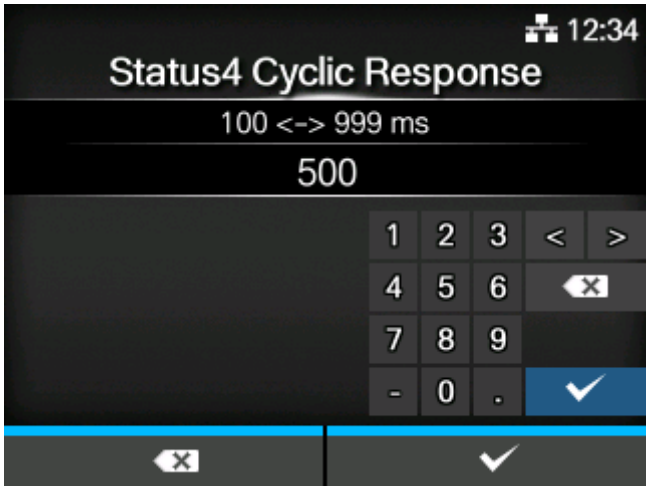

Set the interval for the cyclic status response.

The target interface is LAN.

The target status is Status4 reply cycle.

The setting range is from 100 to 999 ms.

[BCC]

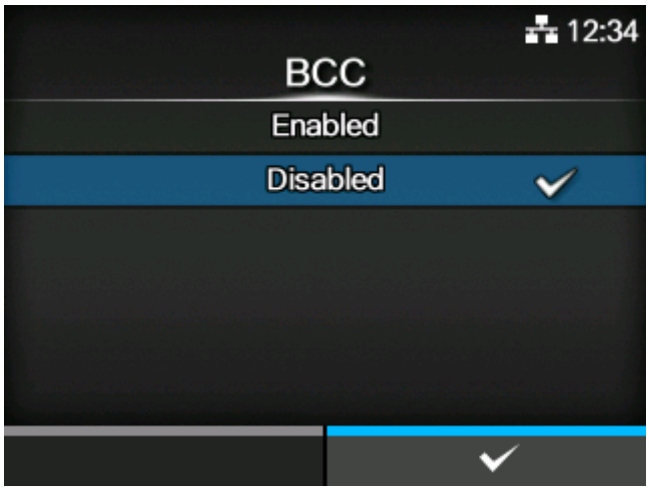

Enable or disable the BCC check function.

Appears if you have selected [Status5] in the [Flow Control] menu.

The options are as follows:

Enabled

Enable the BCC check function.

Disabled

Disable the BCC check function.

[StatusL]

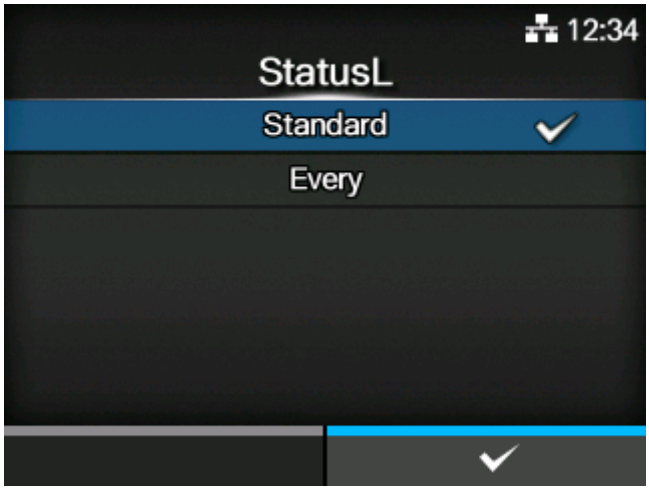

Sets the status of the applicator error.

Appears if you have selected [StatusL] in the [Flow Control] menu.

The options are as follows:

Standard

Applicator errors are given standard status.

Every

Applicator errors are given advanced status.

- [StatusL] cannot be set differently for each interface. (The settings are reflected on the [StatusL] of other communication interfaces.)

[NTP]

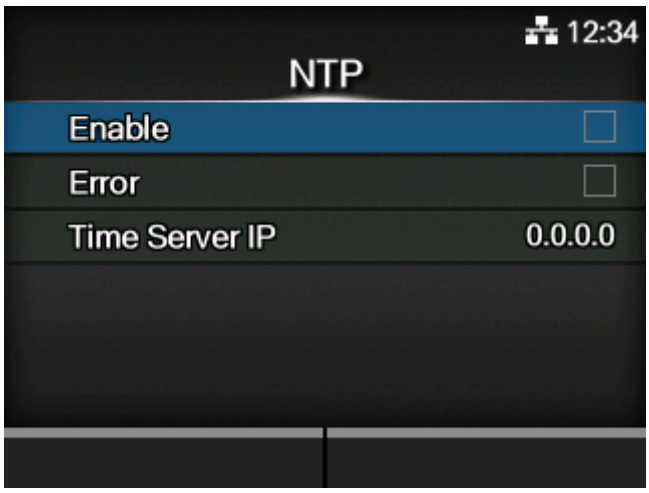

Set the functions for NTP.

The NTP function gets the time information from the NTP server through the network and sets the time of the product.

The setting items are as follows:

Enable

Enable or disable the functions for NTP.

Error

Set to show the NTP error message if detected.

Time Server IP

Set the IP address of the NTP server.

[Enable]

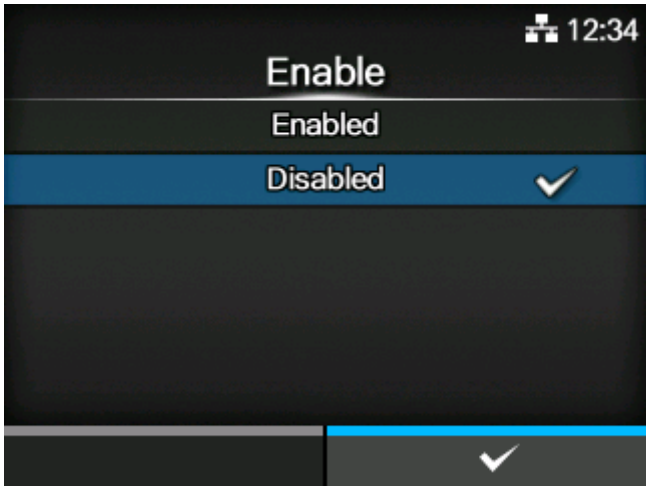

Enable or disable the functions for NTP.

The options are as follows:

Enabled

Enable the NTP function.

Disabled

Disable the NTP function.

[Error]

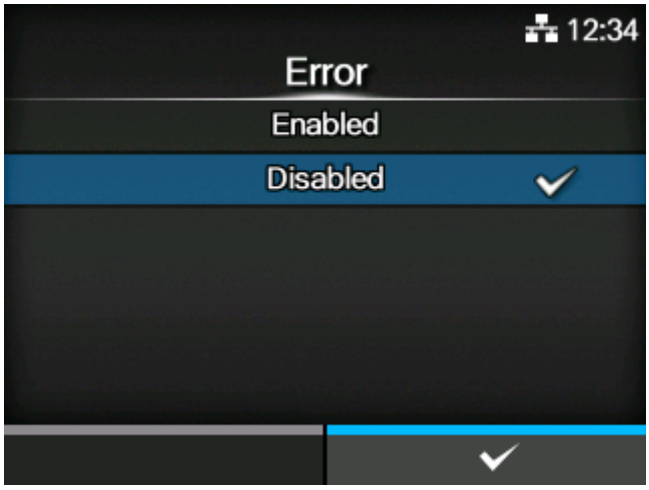

Set to show the NTP error message if detected.

The options are as follows:

Enabled

Shows the error message.

Disabled

Does not show the error message.

[Time Server IP]

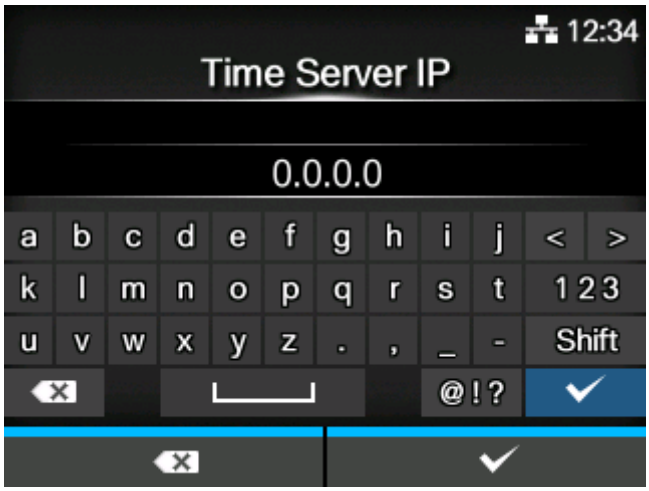

Set the IP address of the NTP server.

The setting range is as follows:

0.0.0.0 to 255.255.255.255

The IP address should normally be set to 0.0.0.0 (the default value). For the default value, the global NTP servers are assigned automatically. Set to a valid IP if the time synchronization is requested for a specific server.

[LPD]

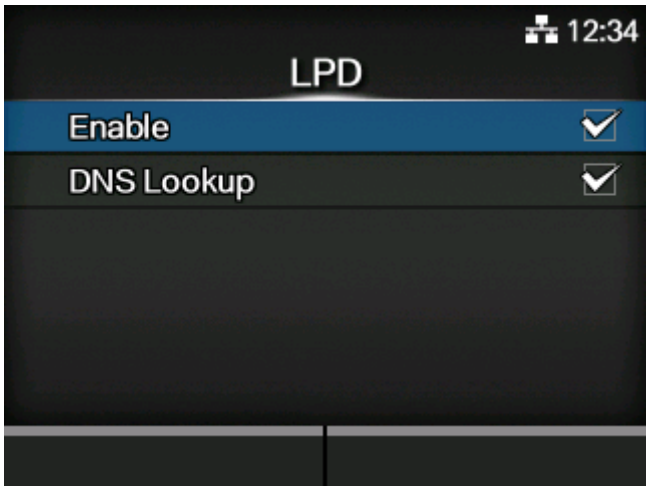

Set the functions for LPD.

The setting items are as follows:

Enable

Enable or disable the LPD function.

DNS Lookup

Enable or disable the DNS Lookup function.

[Enable]

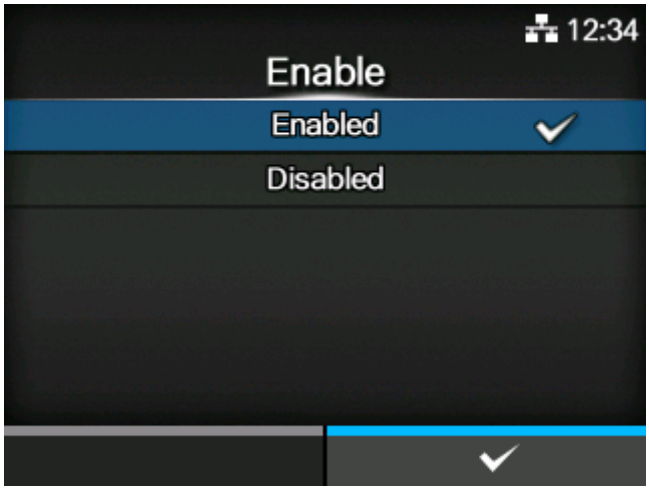

Enable or disable the LPD function.

The options are as follows:

Enabled

Enable the LPD function.

Disabled

Disable the LPD function.

[DNS Lookup]

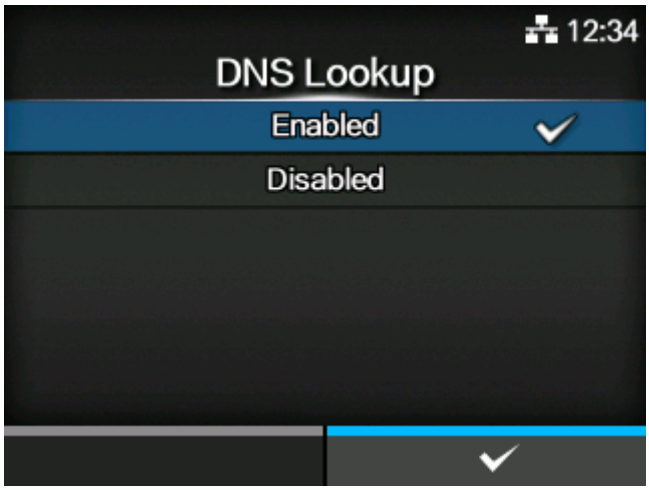

Enable or disable the DNS Lookup function.

The options are as follows:

Enabled

Enable the DNS Lookup function.

Disabled

Disable the DNS Lookup function.

[FTP]

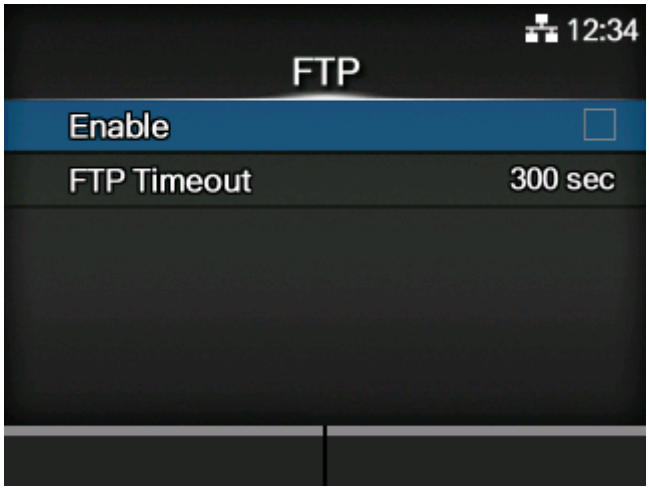

Set the functions for FTP.

The setting items are as follows:

Enable

Enable or disable the functions for FTP.

FTP Timeout

Set the connection timeout period between the product's FTP server and clients.

[Enable]

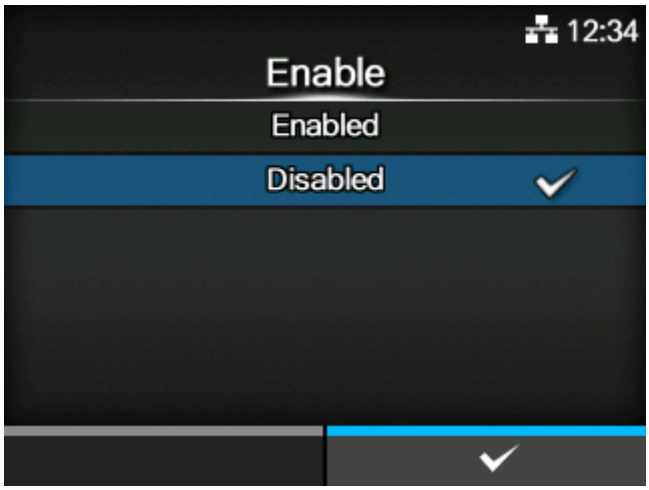

Enable or disable the functions for FTP.

The options are as follows:

Enabled

Enable the FTP function.

Disabled

Disable the FTP function.

[FTP Timeout]

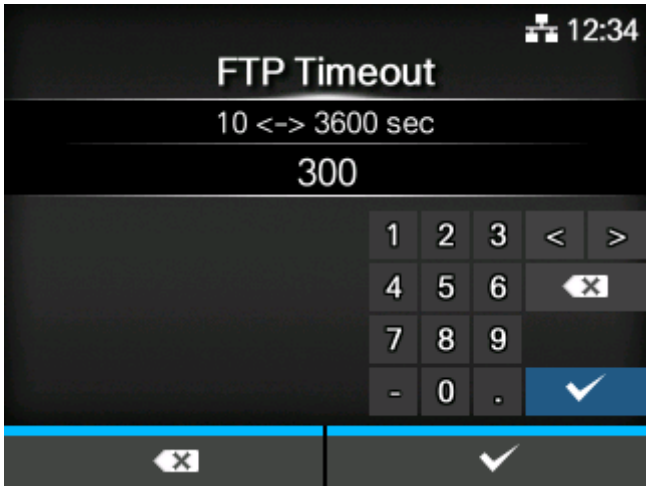

Set the connection timeout period between the product's FTP server and clients.

Specify the maximum number of seconds that the product's FTP server will allow clients to stay connected without receiving any data on either the control or data connection.

The setting range is from 10 to 3600 seconds.

[SNMP]

Set the functions for SNMP.

The SNMP function enables you to monitor and manage a UDP/IP based network.

The setting items are as follows:

sysContact

Set the contact information.

sysName

Set the name information.

sysLocation

Set the location information.

prtMarkerCounterUnit

Set the unit to use for reporting counter values for subunits.

Agent

Set the Agent function.

Traps

Set the Traps function.

[sysContact]

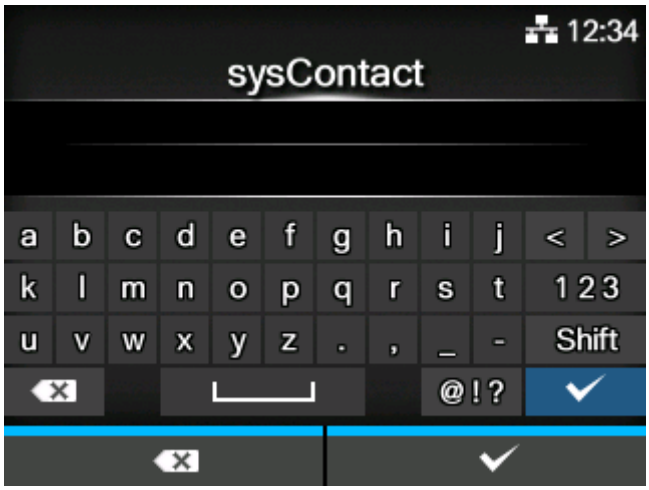

Set the contact information.

You can enter 0 to 255 characters. Alphabets, numbers and symbols can be used.

[sysName]

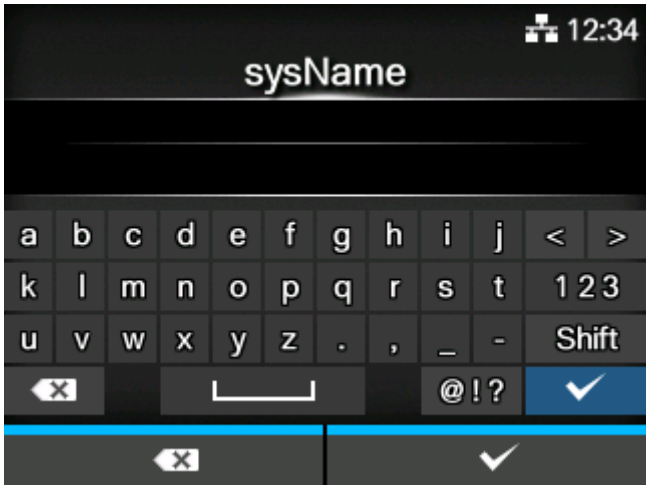

Set the name information.

You can enter 0 to 255 characters. Alphabets, numbers and symbols can be used.

[sysLocation]

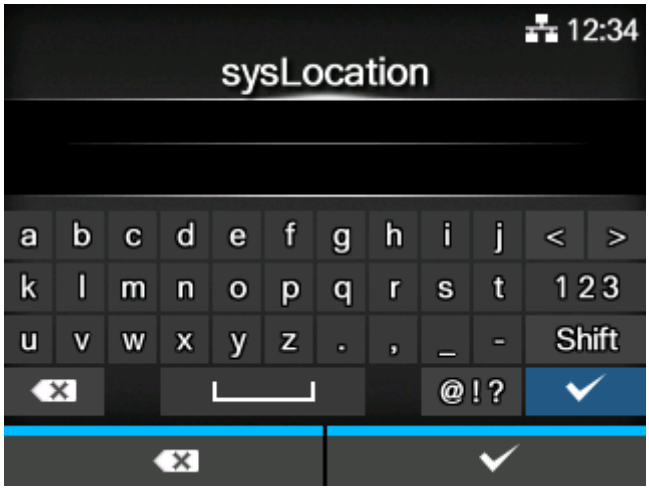

Set the location information.

You can enter 0 to 255 characters. Alphabets, numbers and symbols can be used.

[prtMarkerCounterUnit]

Set the unit to use for reporting counter values for subunits.

The options are as follows:

<u>impressions</u>

Report the number of printed labels.

<u>meters</u>

Report the length of printed labels in meters.

[Agent]

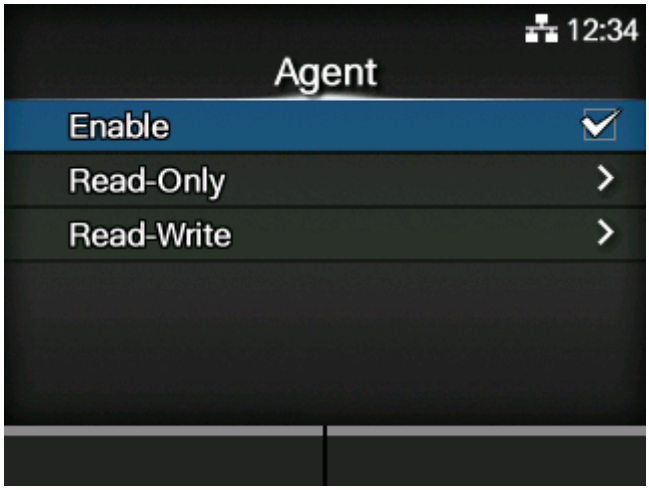

Set the Agent function.

The setting items are as follows:

Enable

Use the Agent function.

Read-Only

Set the read-only function.

Read-Write

Set the read-write function.

[Enable]

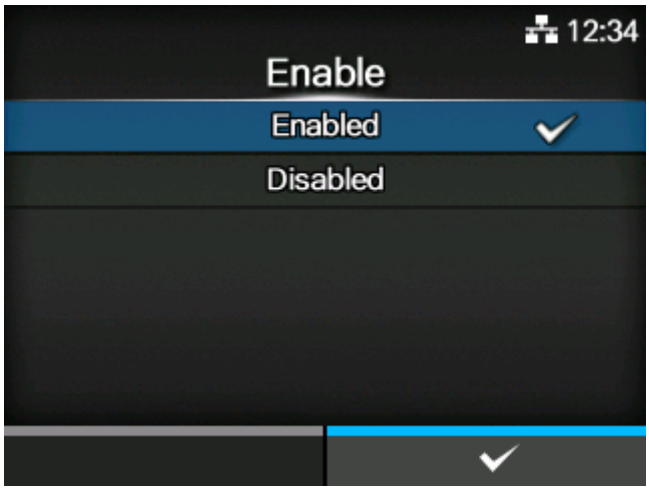

Enable or disable the functions for Agent.

The options are as follows:

Enabled

Enable the functions for Agent.

Disabled

Disable the functions for Agent.

[Read-Only]

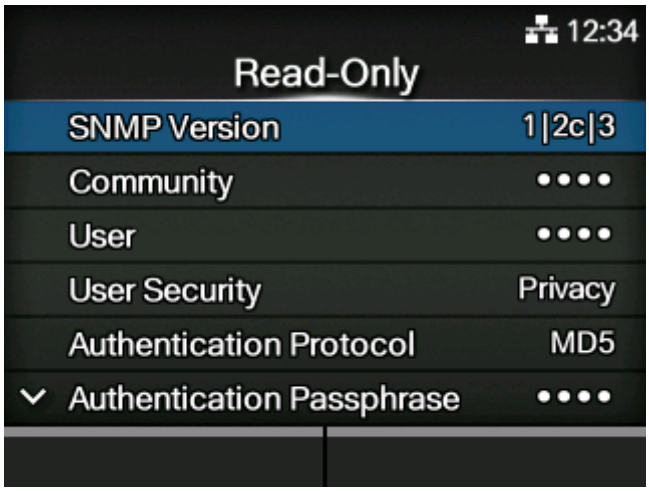

Set the read-only function.

The setting items are as follows:

SNMP Version

Set the SNMP version.

Community

Set the read-only community name.

- Appears only if you have selected [1|2c|3] or [1|2c] in the [SNMP Version] menu.

User

Set the read-only user name.

- Appears only if you have selected [1|2c|3] or [3] in the [SNMP Version] menu.

User Security

Set the read-only security level.

- Appears only if you have selected [1|2c|3] or [3] in the [SNMP Version] menu.

Authentication Protocol

Set the authentication protocol.

- Appears only if you have selected [Authentication] or [Privacy] in the [User Security] menu.

Authentication Passphrase

Set the authentication passphrase.

- Appears only if you have selected [Authentication] or [Privacy] in the [User Security] menu.

Privacy Protocol

Set the privacy protocol.

- Appears only if you have selected [Privacy] in the [User Security] menu.

Privacy Passphrase

Set the privacy passphrase.

- Appears only if you have selected [Privacy] in the [User Security] menu.

[SNMP Version]

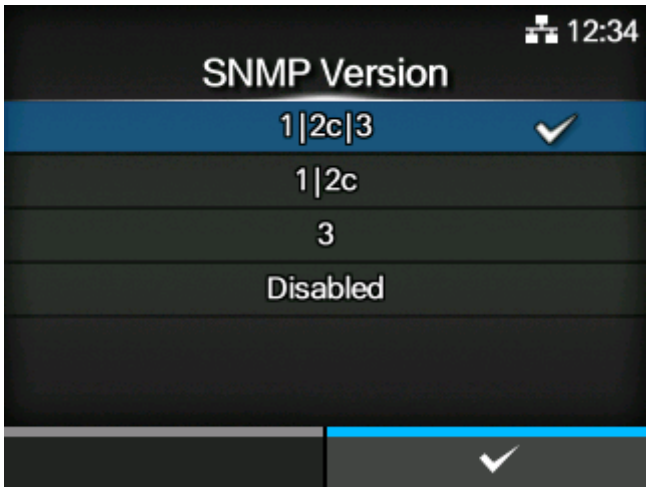

Set the SNMP version.

The options are as follows:

- [1|2c|3]
- [1|2c]
- [3]
- [Disabled]

[Community]

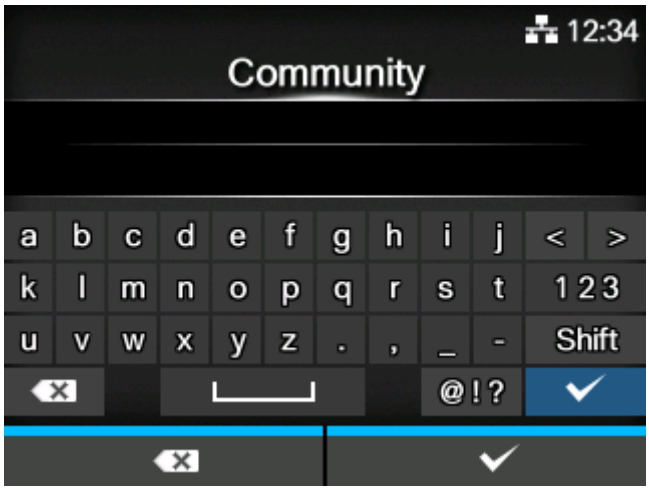

Set the read-only community name.

Appears only if you have selected [1|2c|3] or [1|2c] in the [SNMP Version] menu.

You can enter 1 to 32 characters. Alphabets, numbers and symbols can be used.

Initial setting: public

[User]

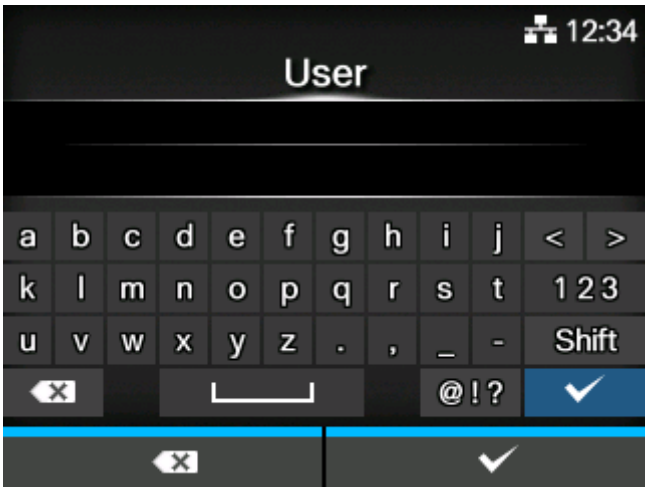

Set the read-only user name.

Appears only if you have selected [1|2c|3] or [3] in the [SNMP Version] menu.

You can enter 1 to 32 characters. Alphabets, numbers and symbols can be used.

Initial setting: rouser

[User Security]

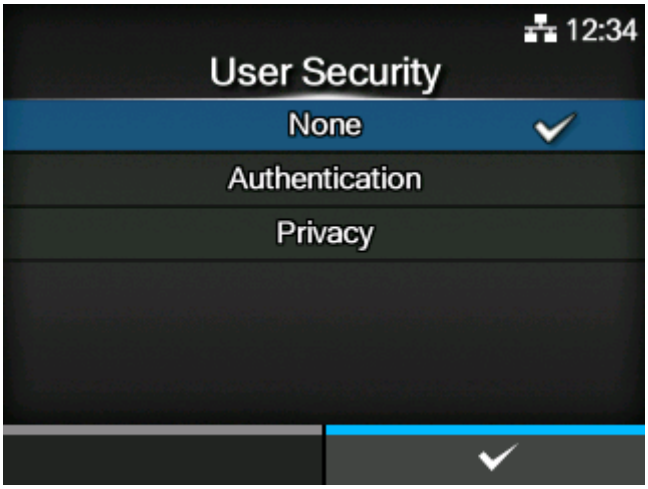

Set the read-only security level.

Appears only if you have selected [1|2c|3] or [3] in the [SNMP Version] menu.

The options are as follows:

- [None]
- [Authentication]
- [Privacy]

[Authentication Protocol]

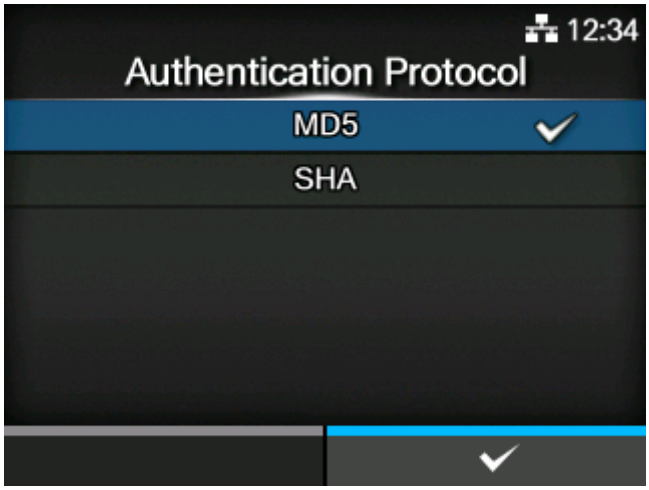

Set the authentication protocol.

Appears only if you have selected [Authentication] or [Privacy] in the [User Security] menu.

The options are as follows:

- [MD5]
- [SHA]

[Authentication Passphrase]

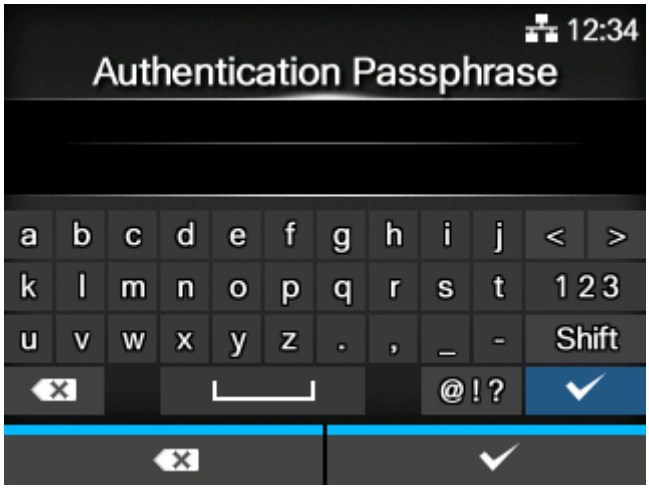

Set the authentication passphrase.

Appears only if you have selected [Authentication] or [Privacy] in the [User Security] menu.

You can enter 8 to 32 characters. Alphabets, numbers and symbols can be used.

Initial setting: mypassword

[Privacy Protocol]

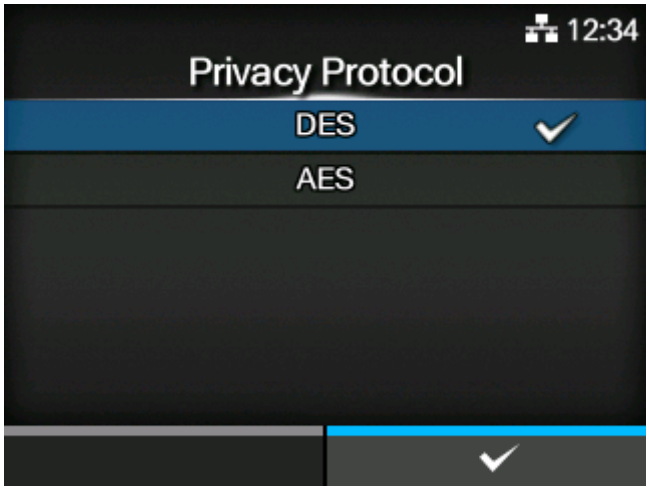

Set the privacy protocol.

Appears only if you have selected [Privacy] in the [User Security] menu.

The options are as follows:

- [DES]
- [AES]

[Privacy Passphrase]

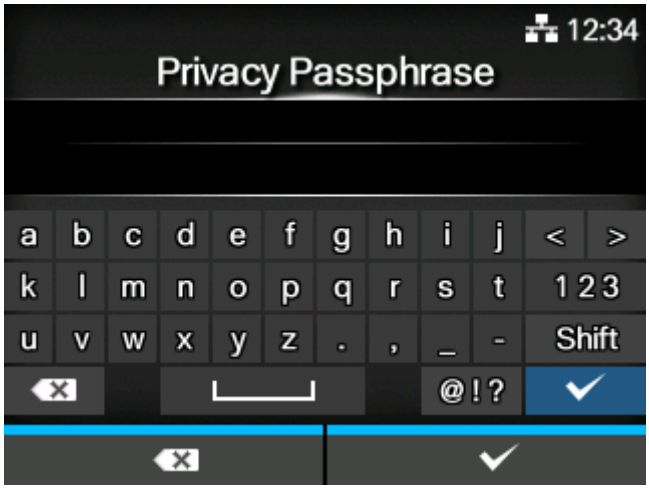

Set the privacy passphrase.

Appears only if you have selected [Privacy] in the [User Security] menu.

You can enter 8 to 32 characters. Alphabets, numbers and symbols can be used.

Initial setting: mypassword

[Read-Write]

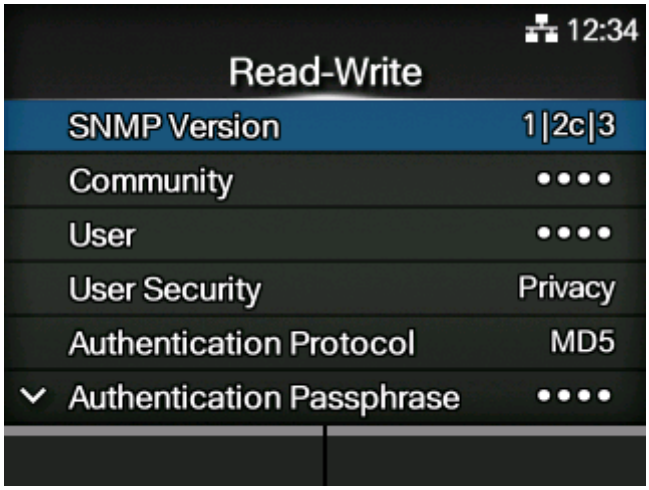

Set the read-write function.

The setting items are as follows:

SNMP Version

Set the SNMP version.

Community

Set the read-write community name.

- Appears only if you have selected [1|2c|3] or [1|2c] in the [SNMP Version] menu.

User

Set the read-write user name.

- Appears only if you have selected [1|2c|3] or [3] in the [SNMP Version] menu.

User Security

Set the read-write security level.

- Appears only if you have selected [1|2c|3] or [3] in the [SNMP Version] menu.

Authentication Protocol

Set the authentication protocol.

- Appears only if you have selected [Authentication] or [Privacy] in the [User Security] menu.

Authentication Passphrase

Set the authentication passphrase.

- Appears only if you have selected [Authentication] or [Privacy] in the [User Security] menu.

Privacy Protocol

Set the privacy protocol.

- Appears only if you have selected [Privacy] in the [User Security] menu.

Privacy Passphrase

Set the privacy passphrase.

- Appears only if you have selected [Privacy] in the [User Security] menu.

[SNMP Version]

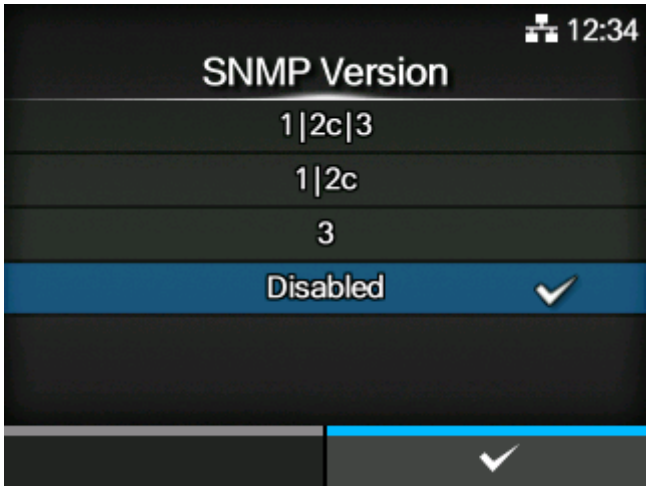

Set the SNMP version.

The options are as follows:

- [1|2c|3]
- [1|2c]
- [3]
- [Disabled]

[Community]

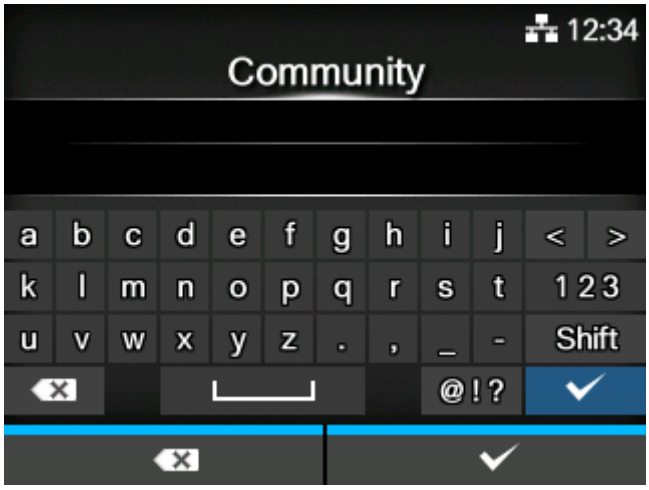

Set the read-write community name.

Appears only if you have selected [1|2c|3] or [1|2c] in the [SNMP Version] menu.

You can enter 1 to 32 characters. Alphabets, numbers and symbols can be used.

Initial setting: private

[User]

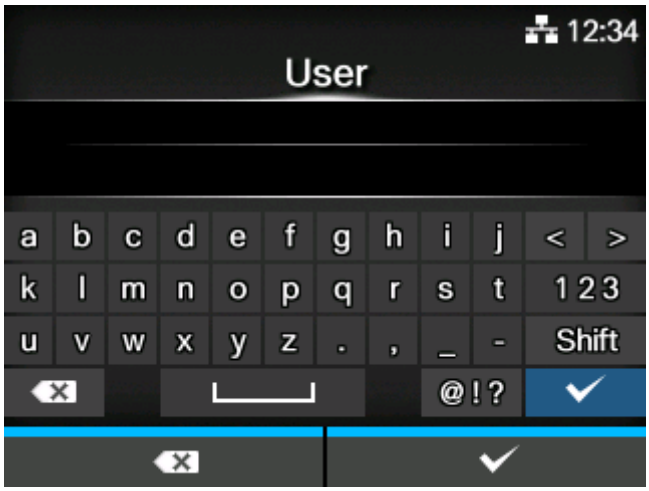

Set the read-write user name.

Appears only if you have selected [1|2c|3] or [3] in the [SNMP Version] menu.

You can enter 1 to 32 characters. Alphabets, numbers and symbols can be used.

Initial setting: rwuser

[User Security]

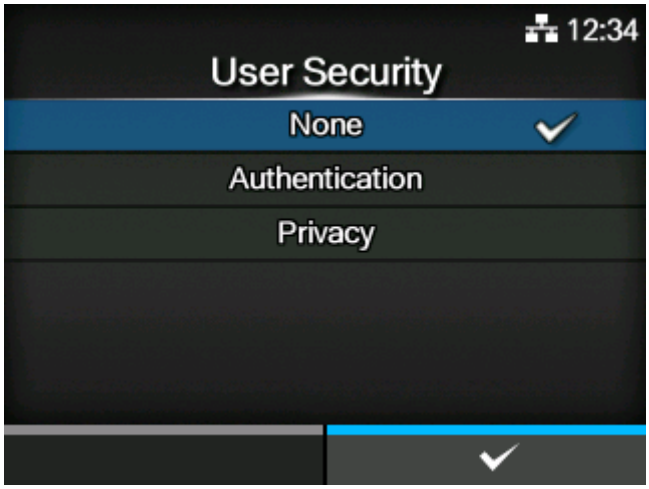

Set the read-write security level.

Appears only if you have selected [1|2c|3] or [3] in the [SNMP Version] menu.

The options are as follows:

- [None]
- [Authentication]
- [Privacy]

[Authentication Protocol]

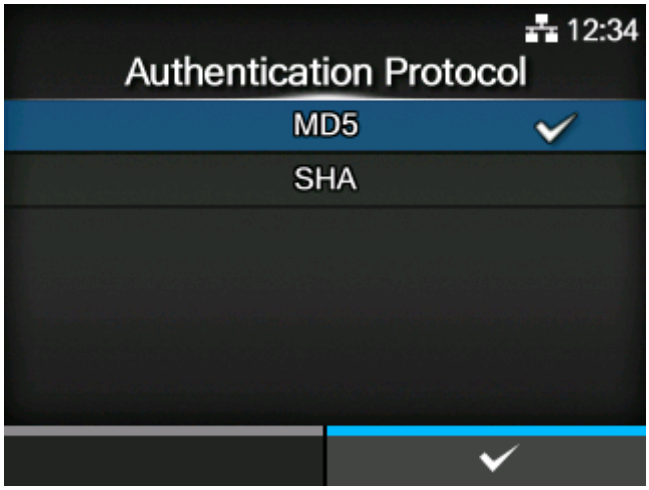

Set the authentication protocol.

Appears only if you have selected [Authentication] or [Privacy] in the [User Security] menu.

The options are as follows:

- [MD5]
- [SHA]

[Authentication Passphrase]

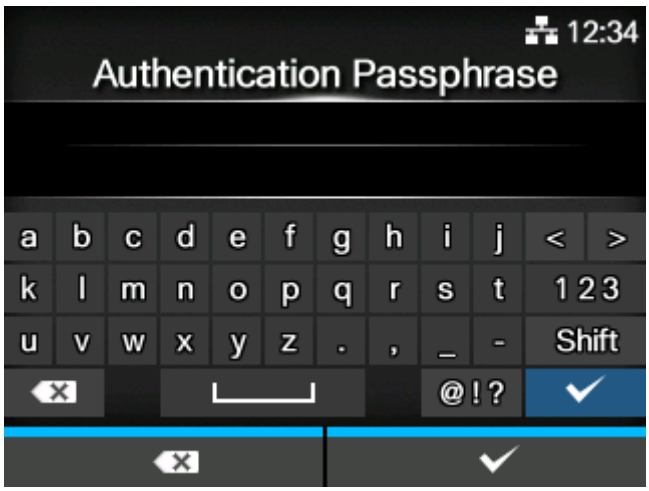

Set the authentication passphrase.

Appears only if you have selected [Authentication] or [Privacy] in the [User Security] menu.

You can enter 8 to 32 characters. Alphabets, numbers and symbols can be used.

Initial setting: mypassword

[Privacy Protocol]

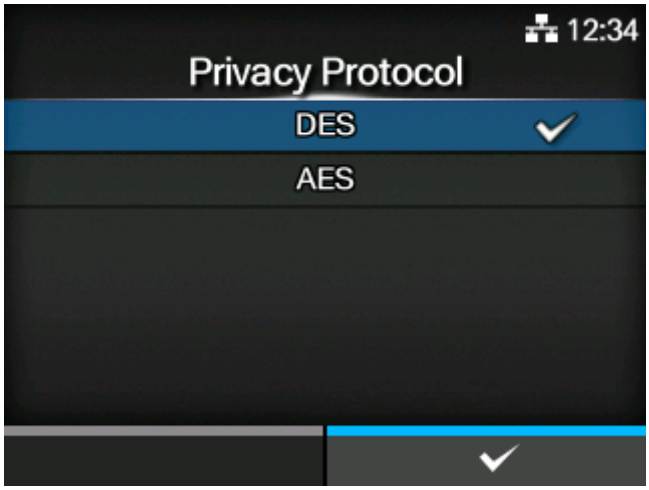

Set the privacy protocol.

Appears only if you have selected [Privacy] in the [User Security] menu.

The options are as follows:

- [DES]
- [AES]

[Privacy Passphrase]

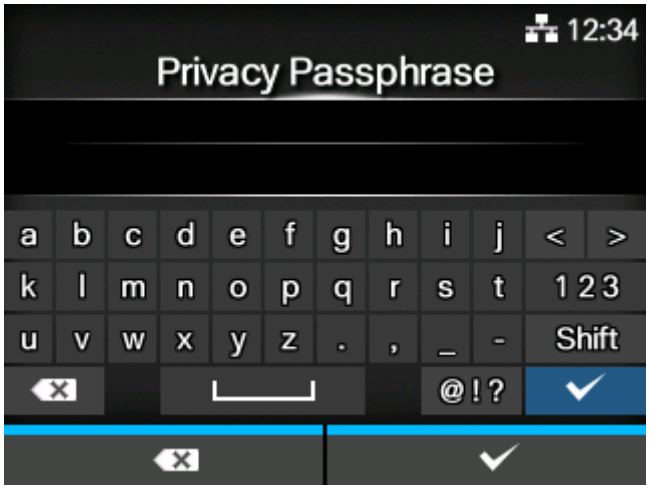

Set the privacy passphrase.

Appears only if you have selected [Privacy] in the [User Security] menu.

You can enter 8 to 32 characters. Alphabets, numbers and symbols can be used.

Initial setting: mypassword

[Traps]

If [SNMP Version] is [1]

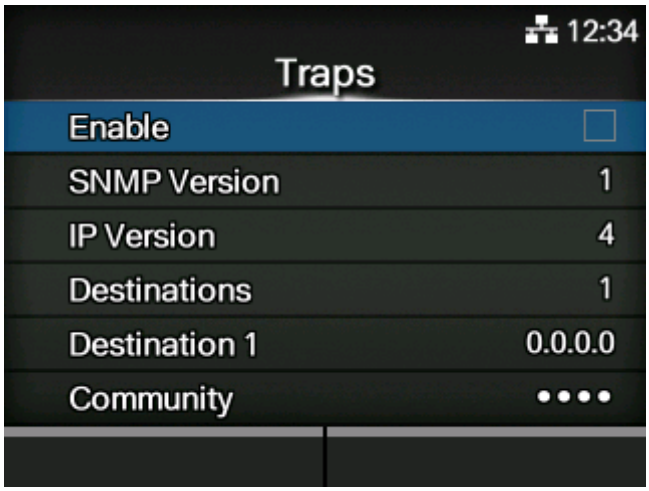

If [SNMP Version] is [3]

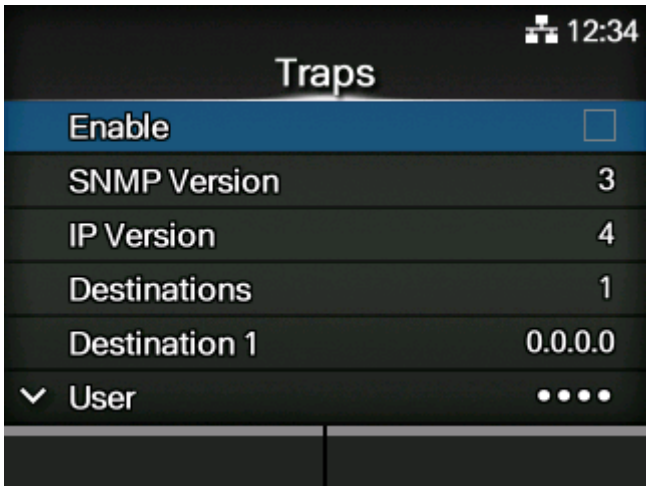

If [Security] is [Privacy]

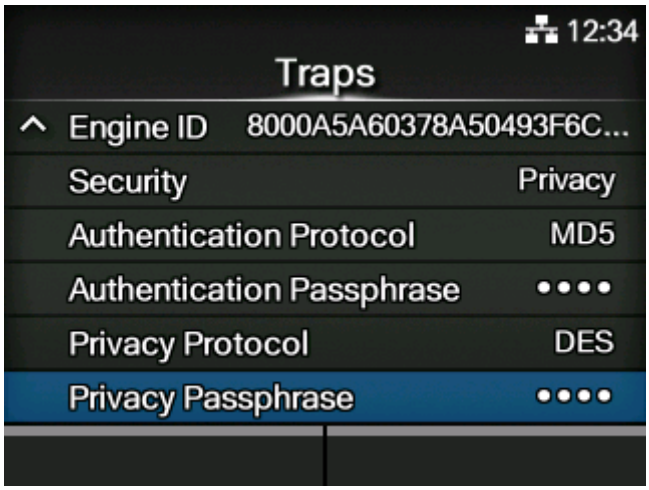

Set the Traps function.

The setting items are as follows:

Enable

Enable the Traps function.

SNMP Version

Set the SNMP version.

IP Version

Set the IP version to use for trap destinations.

Destinations

Set the number of trap destinations.

Destination 1

Set address 1 for the trap destination.

Destination 2

Set address 2 for the trap destination.

- Appears only if you have selected [2] or [3] in the [Destinations] menu.

Destination 3

Set address 3 for the trap destination.

- Appears only if you have selected [3] in the [Destinations] menu.

Community

Set the Traps community name.

- Appears only if you have selected [1] or [2c] in the [SNMP Version] menu.

User

Set the Traps user name.

- Appears only if you have selected [3] in the [SNMP Version] menu.

Engine ID

Set the engine ID.

- Appears only if you have selected [3] in the [SNMP Version] menu.

Security

Set the security level.

- Appears only if you have selected [3] in the [SNMP Version] menu.

Authentication Protocol

Set the authentication protocol.

- Appears only if you have selected [Authentication] or [Privacy] in the [Security] menu.

Authentication Passphrase

Set the authentication passphrase.

- Appears only if you have selected [Authentication] or [Privacy] in the [Security] menu.

Privacy Protocol

Set the privacy protocol.

- Appears only if you have selected [Privacy] in the [Security] menu.

Privacy Passphrase

Set the privacy passphrase.

- Appears only if you have selected [Privacy] in the [Security] menu.

[Enable]

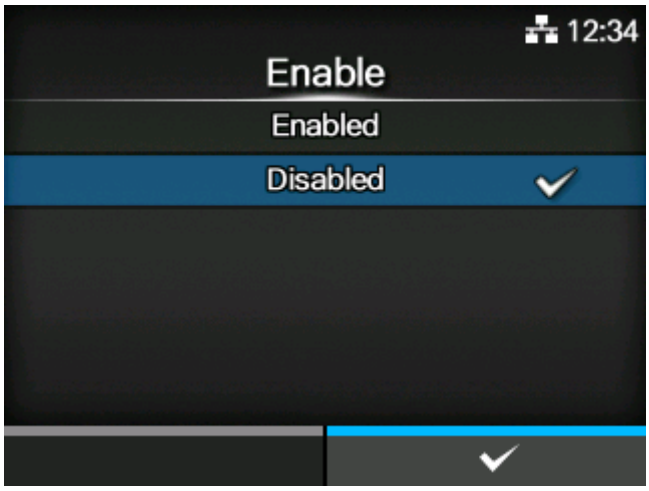

Enable or disable the functions for Traps.

The options are as follows:

Enabled

Enable the Traps function.

Disabled

Disable the Traps function.

[SNMP Version]

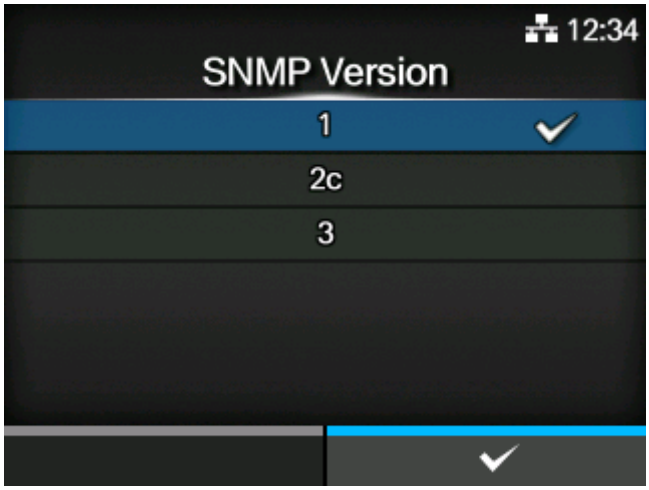

Set the SNMP version.

The options are as follows:

- [1]
- [2c]
- [3]

[IP Version]

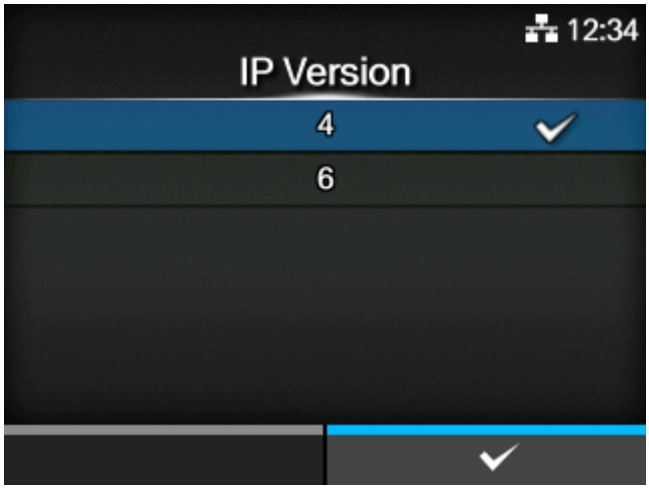

Set the IP version to use for trap destinations.

The options are as follows:

4

Set the IP version to IPv4.

6

Set the IP version to IPv6.

[Destinations]

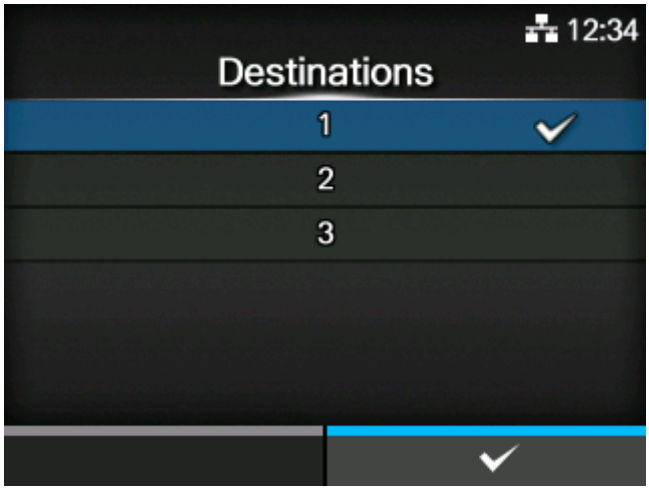

Set the number of trap destinations.

The setting range is from 1 to 3.

[Destination 1]

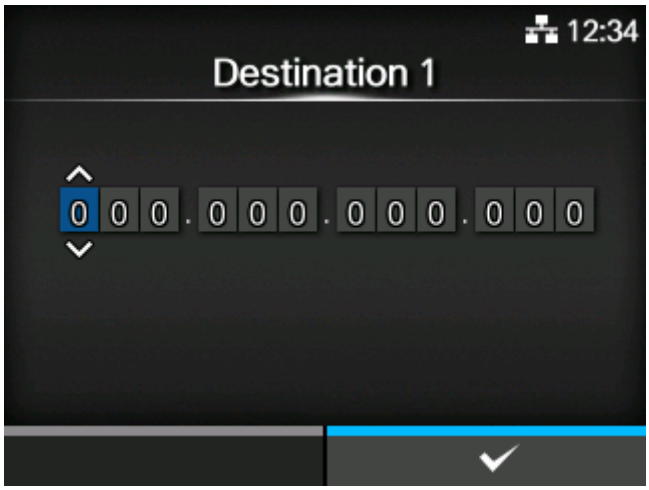

Set address 1 for the trap destination.

The displayed IP version differs depending on the [IP Version] setting.

[Destination 2]

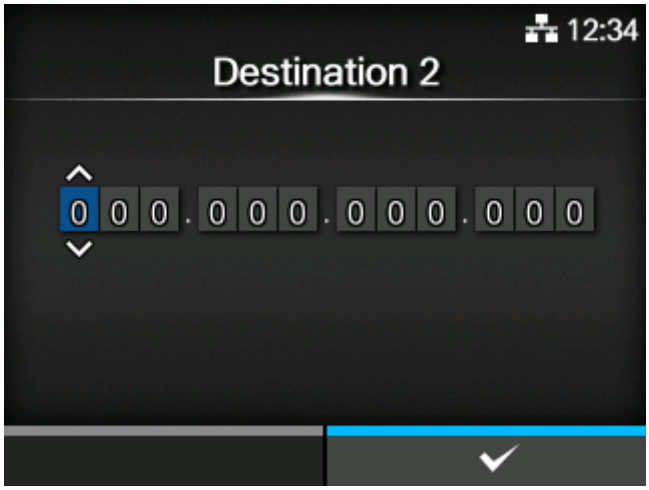

Set address 2 for the trap destination.

The displayed IP version differs depending on the [IP Version] setting.

Appears only if you have selected [2] or [3] in the [Destinations] menu.

[Destination 3]

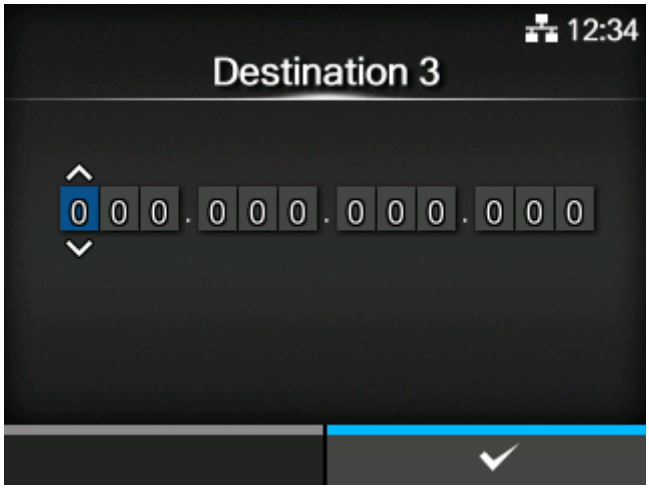

Set address 3 for the trap destination.

The displayed IP version differs depending on the [IP Version] setting.

Appears only if you have selected [3] in the [Destinations] menu.

[Community]

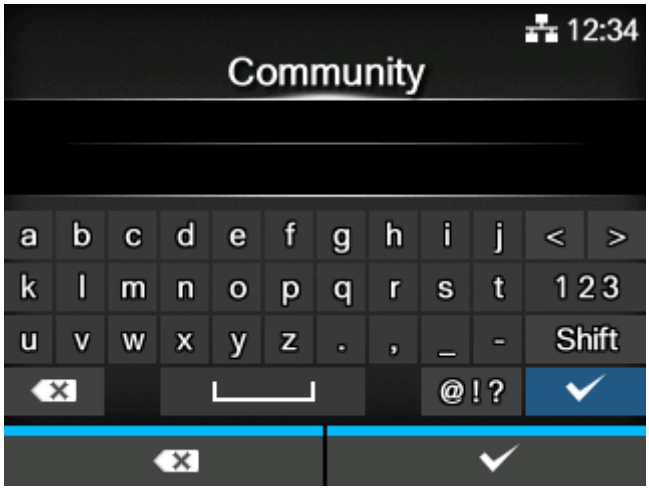

Set the Traps community name.

Appears only if you have selected [1] or [2c] in the [SNMP Version] menu.

You can enter 1 to 32 characters. Alphabets, numbers and symbols can be used.

Initial setting: trapcom

[User]

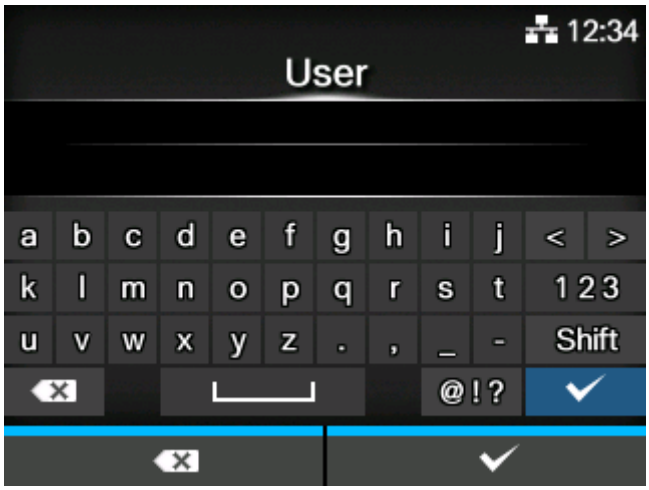

Set the Traps user name.

Appears only if you have selected [3] in the [SNMP Version] menu.

You can enter 1 to 32 characters. Alphabets, numbers and symbols can be used.

Initial setting: trapuser

[Engine ID]

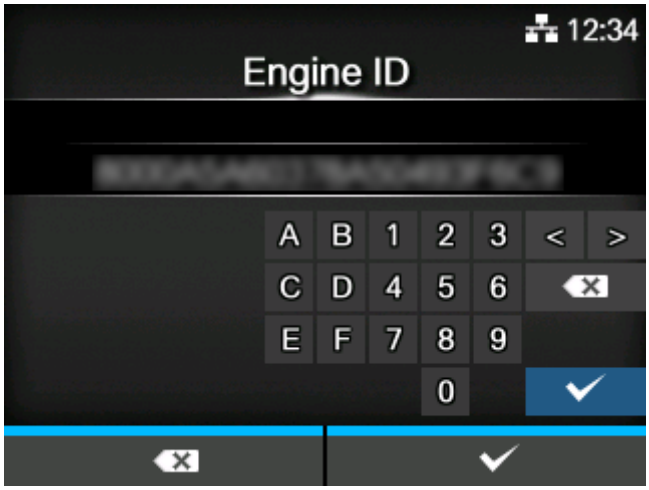

Set the engine ID.

Appears only if you have selected [3] in the [SNMP Version] menu.

Initial setting: Created from the MAC address.

Hexadecimal characters are allowed and the range is from 10 to 64 characters. (Only an even number of characters is allowed.)

[Security]

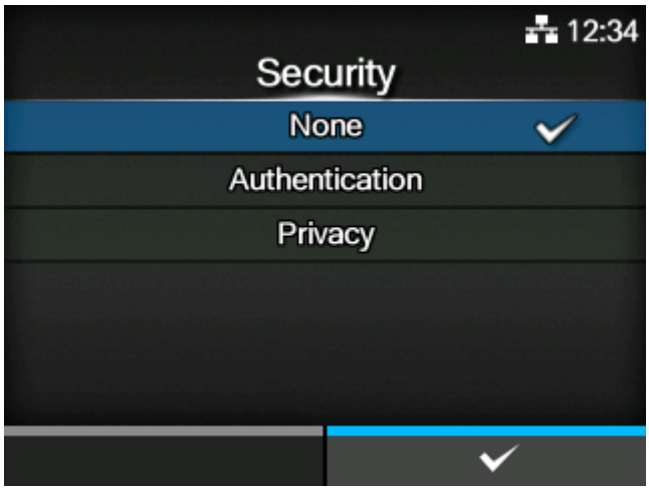

Set the security level.

Appears only if you have selected [3] in the [SNMP Version] menu.

The options are as follows:

- [None]
- [Authentication]
- [Privacy]

[Authentication Protocol]

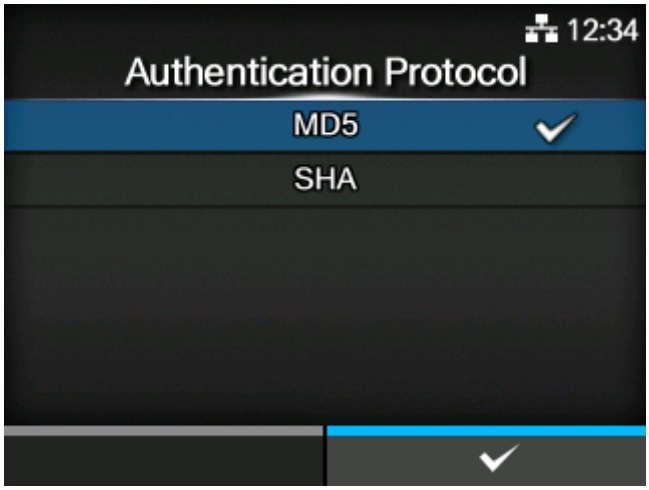

Set the authentication protocol.

Appears only if you have selected [Authentication] or [Privacy] in the [Security] menu.

The options are as follows:

- [MD5]
- [SHA]

[Authentication Passphrase]

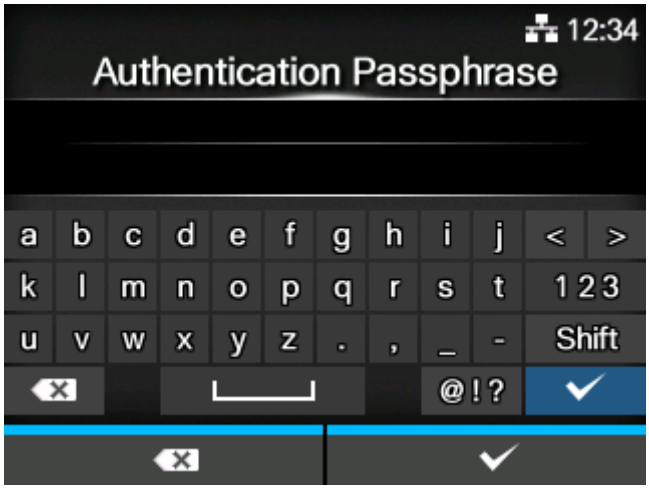

Set the authentication passphrase.

Appears only if you have selected [Authentication] or [Privacy] in the [Security] menu.

You can enter 8 to 32 characters. Alphabets, numbers and symbols can be used.

Initial setting: mypassword

[Privacy Protocol]

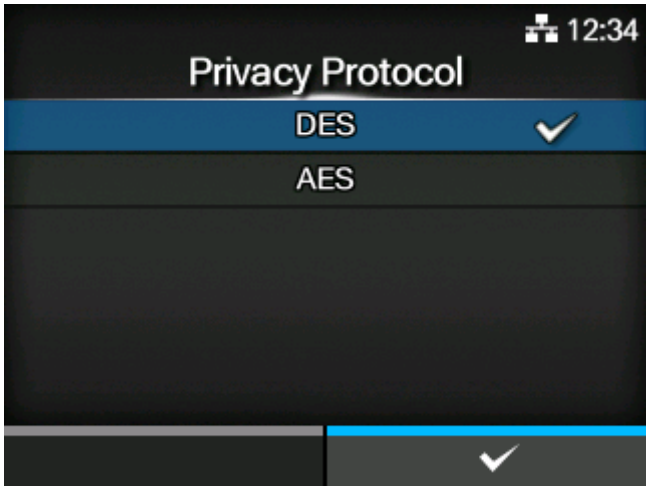

Set the authentication privacy protocol.

Appears only if you have selected [Privacy] in the [Security] menu.

The options are as follows:

- [DES]
- [AES]

[Privacy Passphrase]

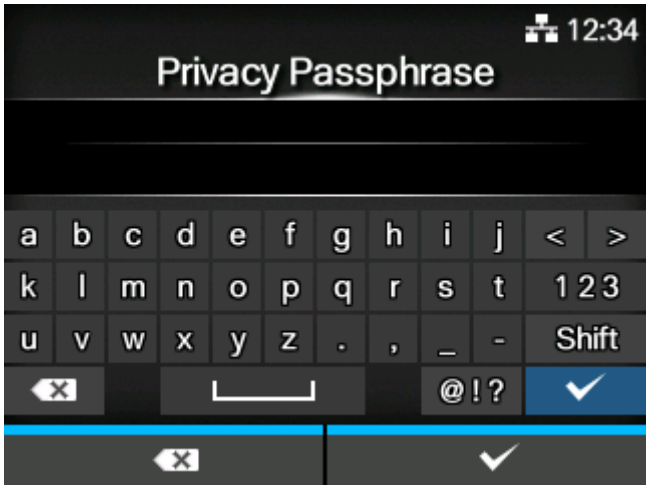

Set the authentication privacy passphrase.

Appears only if you have selected [Privacy] in the [Security] menu.

You can enter 8 to 32 characters. Alphabets, numbers and symbols can be used.

Initial setting: mypassword

[Online Services] (SOS users only)

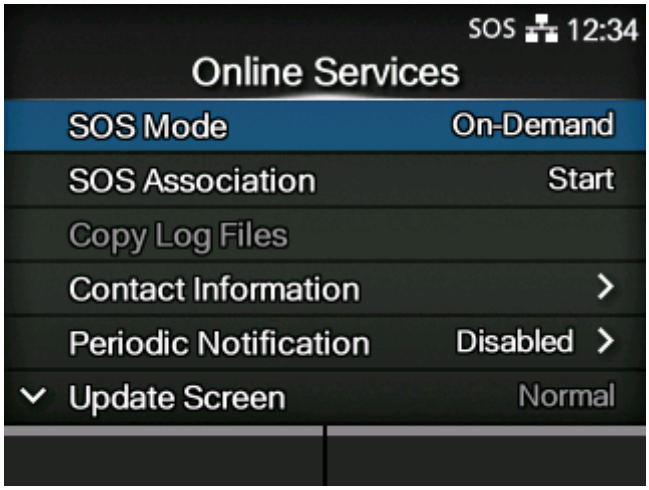

Set the functions for SOS (SATO Online Services).

To use SOS Real-Time and On-Demand periodic notification, it is necessary to first create an SOS account and add the product.

The setting items are as follows:

SOS Mode

Selects the mode for SOS or disable SOS.

Allow Remote Control

Sets whether to allow setting the product (remote control) from SOS.

- Appears only if you have selected [Real-Time] in the [SOS Mode] menu.

SOS Association

Shows the serial number and association code that are necessary when adding the product to SOS.

- Appears only if you have selected [On-Demand] or [Real-Time] in the [SOS Mode] menu.

Copy Log Files

Copies an SOS log file to USB memory.

- Appears only if you have selected [On-Demand] or [Real-Time] in the [SOS Mode] menu. It is available only when the log data is in the product and the USB memory is inserted into the product.

Contact Information

Sets the SOS contact information that is displayed at the time of the error outbreak.

- Appears only if you have selected [On-Demand] or [Real-Time] in the [SOS Mode] menu.

Periodic Notification

Sets the functions for periodic SOS notifications.

A specialized application is required to scan the QR code displayed on the screen of this function.

- Appears only if you have selected [On-Demand] in the [SOS Mode] menu.

Update Screen

Sets the type of the screen displayed for SOS (SATO Online Services) periodic notification or SOS update.

A specialized application is required to scan the QR code.

- Appears only if you have selected [On-Demand] in the [SOS Mode] menu.

QR code offset

This feature is not supported.

SOS Update

Shows the current product information with a QR code. Scan the QR code with a tablet or smartphone, and send it to the SOS cloud.

A specialized application is required to scan the QR code.

- Appears only if you have selected [On-Demand] in the [SOS Mode] menu.

[SOS Mode] (SOS users only)

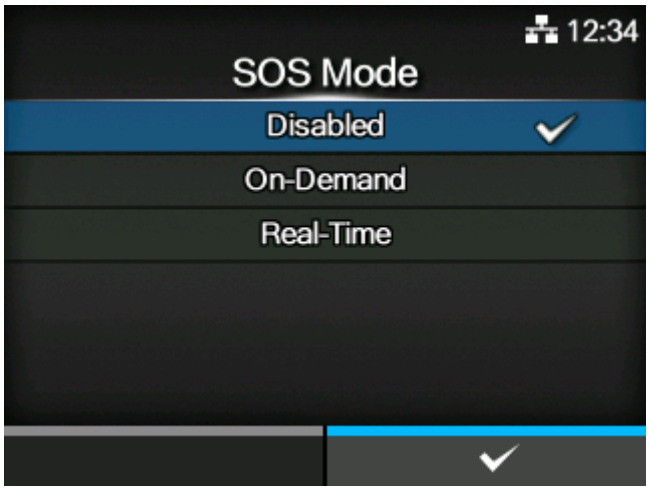

Select or disable the SOS (SATO Online Services) mode.

The options are as follows:

Disabled

Disables SOS.

On-Demand

Shows the product information with a QR code. Scan the displayed QR code with a tablet or smartphone, and send the information to the SOS cloud.

A specialized SOS application is required to scan the QR code.

Real-Time

Sends the product information to the SOS cloud in real time using the LAN connection.

The confirmation screen is shown if you select [Real-Time]. To agree on the Terms of Use and enable the Real-Time mode, press the button.

[Allow Remote Control] (SOS users only)

Sets whether to allow setting the product (remote control) from SOS (SATO Online Services).

Appears only if you have selected [Real-Time] in the [SOS Mode] menu.

The options are as follows:

Deny

Does not allow remote control from SOS.

Until Reboot

Allows remote control from SOS until the product reboots.

Always

Always allows remote control from SOS.

[SOS Association] (SOS users only)

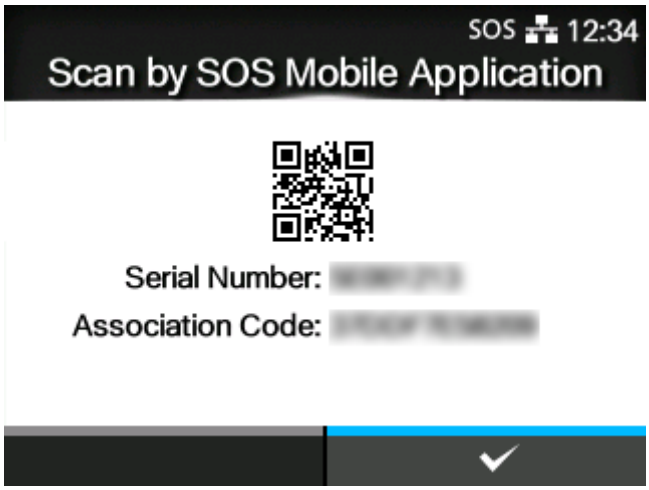

Shows the serial number and association code that are necessary when adding the product to SOS (SATO Online Services).

Appears only if you have selected [On-Demand] or [Real-Time] in the [SOS Mode] menu.

In Real-Time Mode

The screen shown above appears after the standby screen.

In the SOS specialized application, scan the QR code or input the information displayed on the screen. Finally, press the button to complete SOS association.

In On-Demand Mode

A QR code and serial number appears. In the SOS specialized application, scan the QR code or input the information displayed on the screen. Then press the button.

When a PIN code input screen appears, input the PIN code shown on the application and press the button.

The screen including the association code shown above appears. In the SOS specialized application, scan the QR code or input the information displayed on the screen. Finally, press the button to complete SOS association.

- To add a product to SOS, refer to the SOS user manual.
  http://www.sato-sos.com/en/support/sos_usermanual.pdf

[Copy Log Files] (SOS users only)

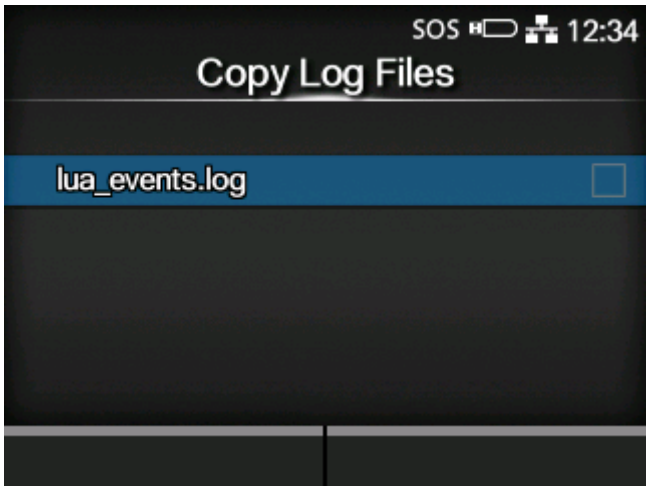

Copies SOS (SATO Online Services) log files to USB memory.

Appears only if you have selected [On-Demand] or [Real-Time] in the [SOS Mode] menu.

It is available only when the log data is in the product and the USB memory is inserted into the product.

- Be sure to perform a virus check for the USB memory before connecting it to the product. SATO Corporation shall not be held responsible for any product malfunctions caused by a virus spread via USB memory.

The procedure to copy the log file is as follows:

1. Select the file to copy and press the button. A check mark is shown on the right side of the file name.
2. After you select the file, press the button to copy the selected file to the USB memory.

[Contact Information] (SOS users only)

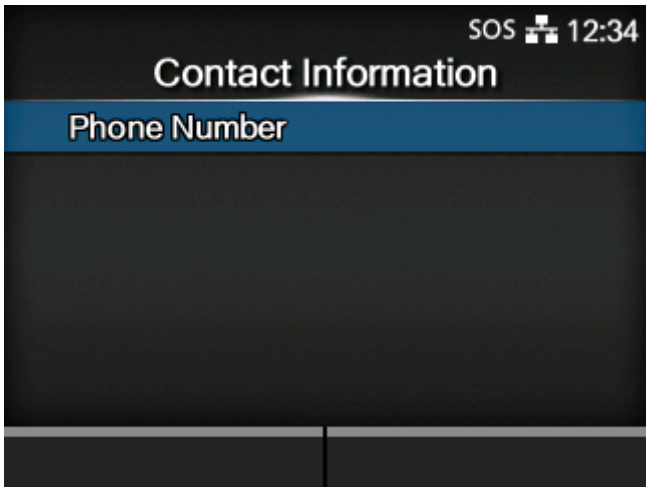

Sets the SOS (SATO Online Services) contact information that is displayed at the time of the error outbreak.

Appears only if you have selected [On-Demand] or [Real-Time] in the [SOS Mode] menu.

The setting items are as follows:

Phone Number

Sets the phone number that is displayed on the SOS error screen when you select the SOS icon on an error message screen.

[Phone Number] (SOS users only)

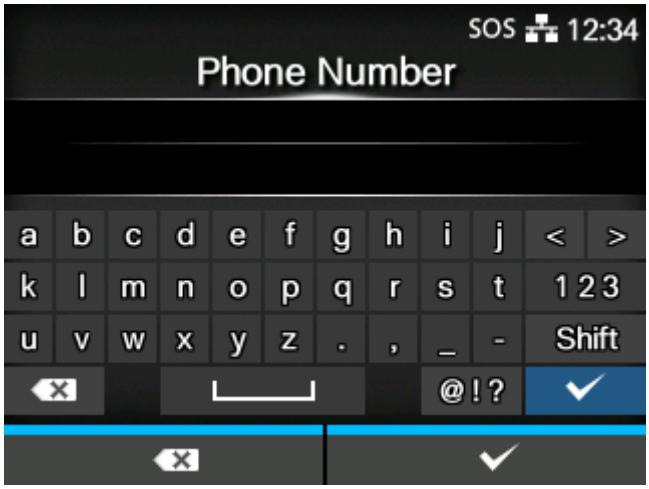

Sets the phone number that is displayed on the SOS error screen when you select the SOS (SATO Online Services) icon on an error message screen.

Up to 20 characters can be set.

[Periodic Notification] (SOS users only)

When you set the [Type] menu to [Counter]

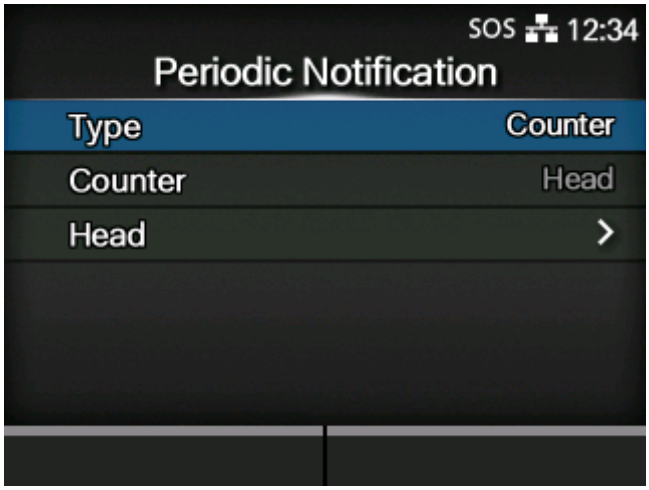

Sets the function for periodic SOS (SATO Online Services) notifications.

Appears only if you have selected [On-Demand] in the [SOS Mode] menu.

In this function, the product information is shown periodically with a QR code. Scan the displayed QR code with a tablet or smartphone, and send the information to the SOS cloud.

A specialized application is required to scan the QR code.

The setting items are as follows:

Type

Select the timing to perform the periodic notification or disable this function.

Counter

The print head appears as an object for a counter.

- Appears only if you have selected [Counter] in the [Type] menu.

Head

You can use the counter to set the standard distance that the print head moves.

- Appears only if you have selected [Counter] in the [Type] menu.

Notifications

Specifies the number of periodic notifications to be sent per day.

- Appears only if you have enabled the NTP function or installed the optional battery for the calendar, and if you have selected [Daily] in the [Type] menu.

Weekday

Specifies the day of the week to perform the periodic notification.

- Appears only if you have enabled the NTP function or installed the optional battery for the calendar, and if you have selected [Weekly] in the [Type] menu.

Day

Sets the date to perform the periodic notification.

- Appears only if you have enabled the NTP function or installed the optional battery for the calendar, and if you have selected [Monthly] in the [Type] menu.

Time 1

Specifies the time to perform the first periodic notification.

- Appears only if you have enabled the NTP function or installed the optional battery for the calendar, and if you have selected [Daily] in the [Type] menu.

Time 2

Specifies the time to perform the second periodic notification.

- Appears only if you have enabled the NTP function or installed the optional battery for the calendar, and if you have set [Daily] in the [Type] menu and have set more than two times for [Notifications].

Time 3

Specifies the time to perform the third periodic notification.

- Appears only if you have enabled the NTP function or installed the optional battery for the calendar, and if you have selected [Daily] in the [Type] menu and have set three times for [Notifications].

Time

Specifies the time of the specified day or date to perform periodic notifications.

- Appears only if you have enabled the NTP function or installed the optional battery for the calendar, and if you have selected [Weekly] or [Monthly] in the [Type] menu.

[Type] (SOS users only)

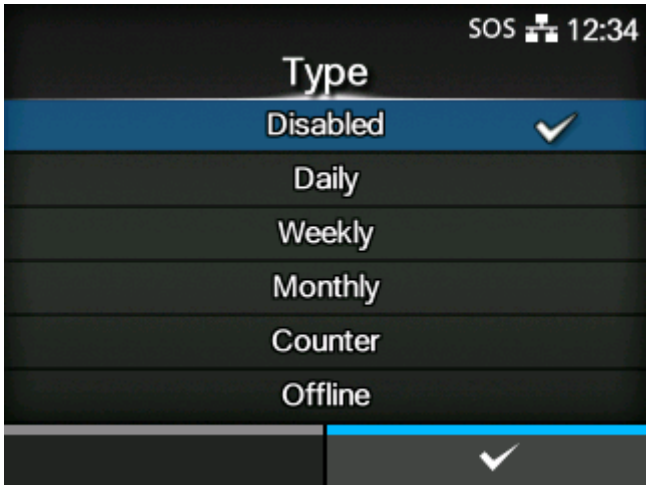

Select the timing to perform the periodic notification or disable this function.

Advanced setting items appear on the [Periodic Notification] menu according to the selected options.

The options are as follows:

Disabled

Disables the periodic notification function.

Daily

Displays the notification screen every day for specified number of times, at the specified time.

- Appears only if you have enabled the NTP function or installed the optional battery for the calendar.

Weekly

Displays the notification screen every week at the specified day of week and time.

- Appears only if you have enabled the NTP function or installed the optional battery for the calendar.

Monthly

Displays the notification screen every month at the specified day and time.

- Appears only if you have enabled the NTP function or installed the optional battery for the calendar.

Counter

Displays the notification screen when the counter of a consumable reaches to the specified value.

Offline

Displays the notification screen when the product is changed to Offline mode.

[Head] (SOS users only)

You can confirm the history and settings for the distance the print head has moved.

Appears only if you have selected [Counter] in the [Type] menu.

Meters

Specifies the print distance of the print head for the timing to perform the periodic notification.

Last Update

Shows the print distance of the print head for the last periodic notification.

Next Update

Shows the print distance of the print head for the next periodic notification.

Current Value

Shows the current distance the print head has moved.

[Meters] (SOS users only)

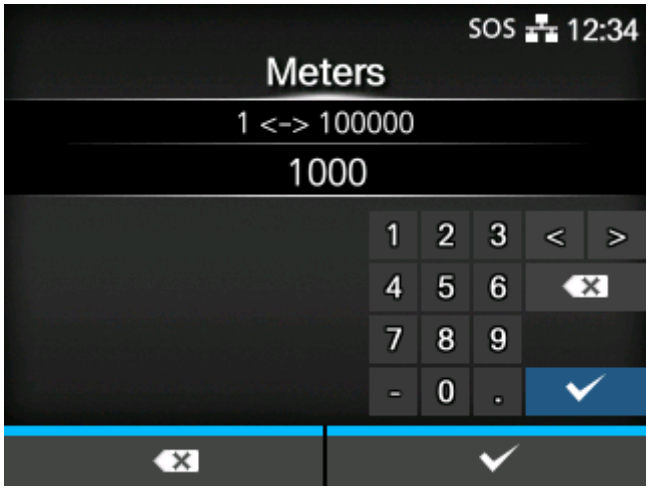

Specifies the print distance of the print head for the timing to perform the periodic notification. You will be notified for every meter you specify.

The setting range is from 1 to 100,000.

[Notifications] (SOS users only)

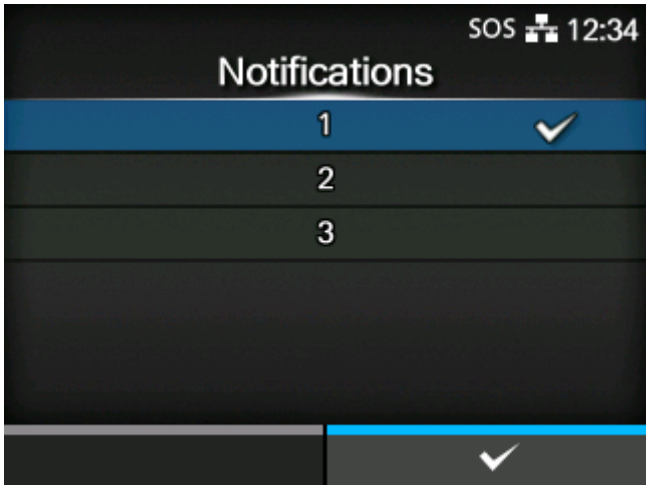

Specifies the number of periodic notifications to be sent per day.

Appears only if you have enabled the NTP function or installed the optional battery for the calendar, and if you have selected [Daily] in the [Type] menu.

The setting range is from 1 to 3.

[Weekday] (SOS users only)

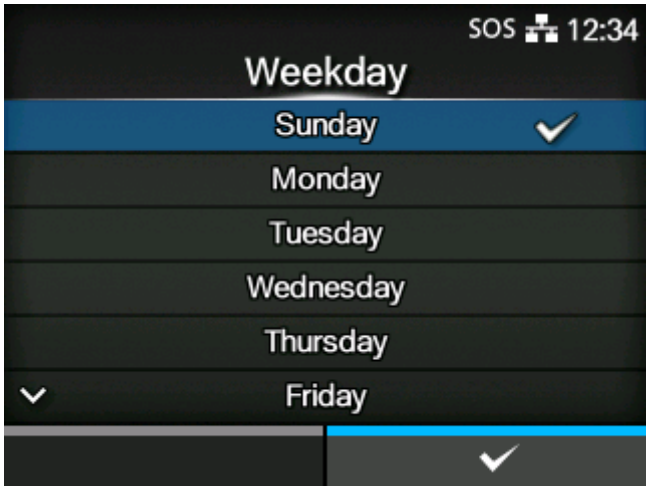

Specifies the day of the week to perform the periodic notification.

Appears only if you have enabled the NTP function or installed the optional battery for the calendar, and if you have selected [Weekly] in the [Type] menu.

The setting range is from Sunday to Saturday.

[Day] (SOS users only)

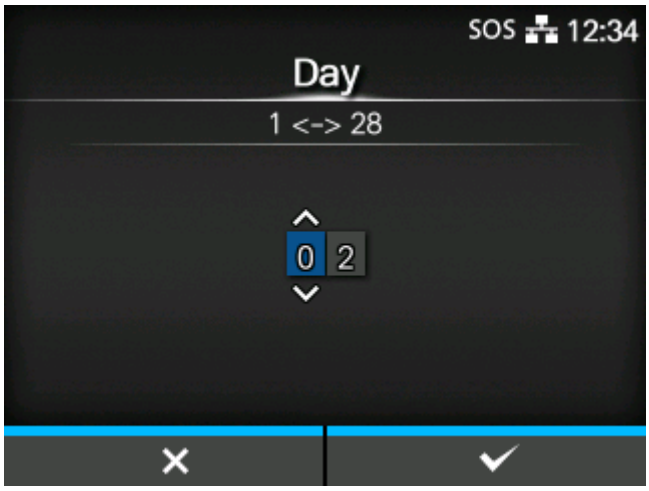

Sets the date to perform the periodic notification.

Appears only if you have enabled the NTP function or installed the optional battery for the calendar, and if you have selected [Monthly] in the [Type] menu.

The setting range is from 1 to 28.

[Time 1] (SOS users only)

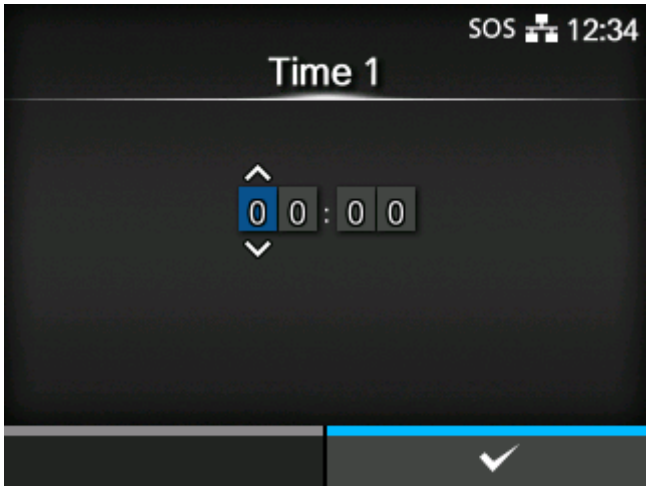

Specifies the time to perform the first periodic notification.

Appears only if you have enabled the NTP function or installed the optional battery for the calendar, and if you have selected [Daily] in the [Type] menu.

[Time 2] (SOS users only)

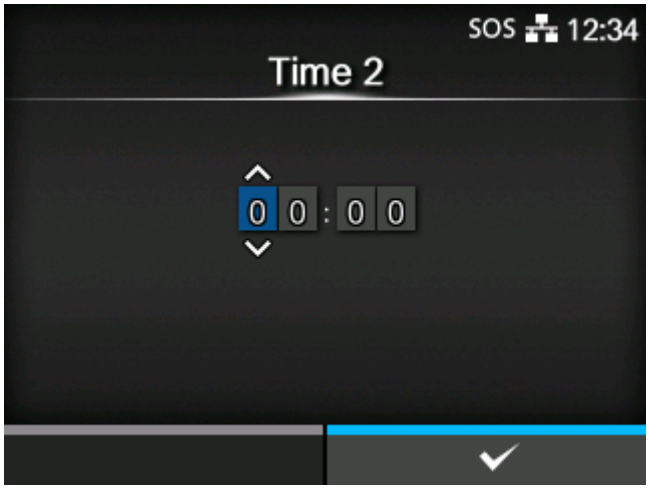

Specifies the time to perform the second periodic notification.

Appears only if you have enabled the NTP function or installed the optional battery for the calendar, and if you have set [Daily] in the [Type] menu and have set more than two times for [Notifications].

[Time 3] (SOS users only)

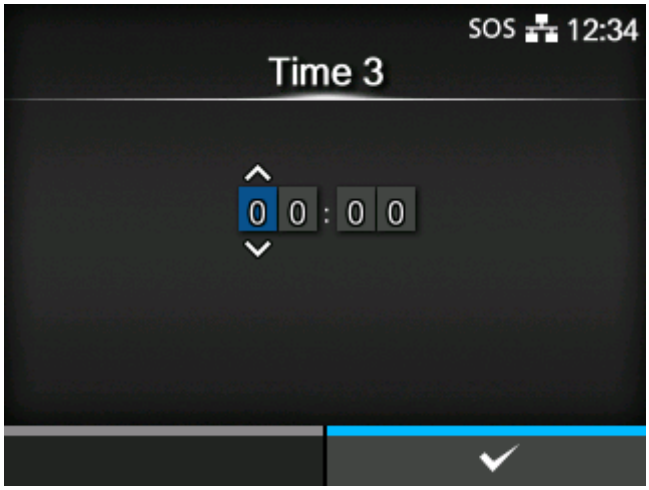

Specifies the time to perform the third periodic notification.

Appears only if you have enabled the NTP function or installed the optional battery for the calendar, and if you have selected [Daily] in the [Type] menu and have set three times for [Notifications].

[Time] (SOS users only)

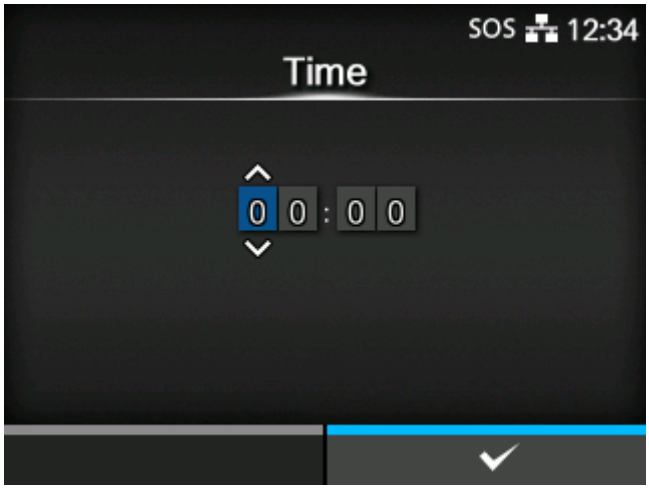

Specifies the time of the specified day or date to perform periodic notifications.

Appears only if you have enabled the NTP function or installed the optional battery for the calendar, and if you have selected [Weekly] or [Monthly] in the [Type] menu.

[Update Screen] (SOS users only)

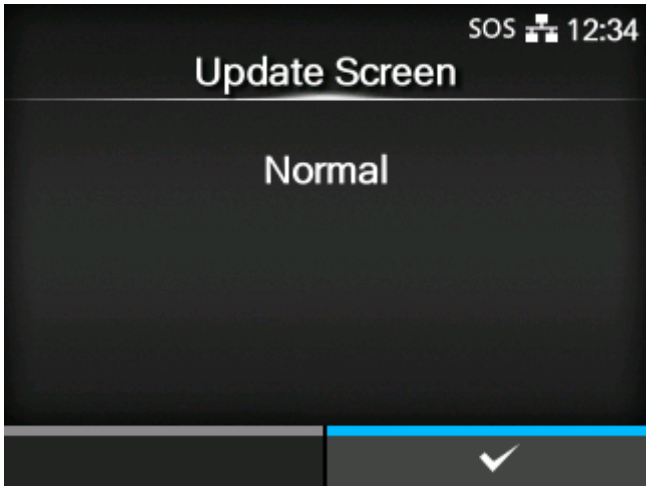

Sets the type of the screen displayed for SOS (SATO Online Services) periodic notification or SOS update.

This product supports the normal screen only.

[SOS Update] (SOS users only)

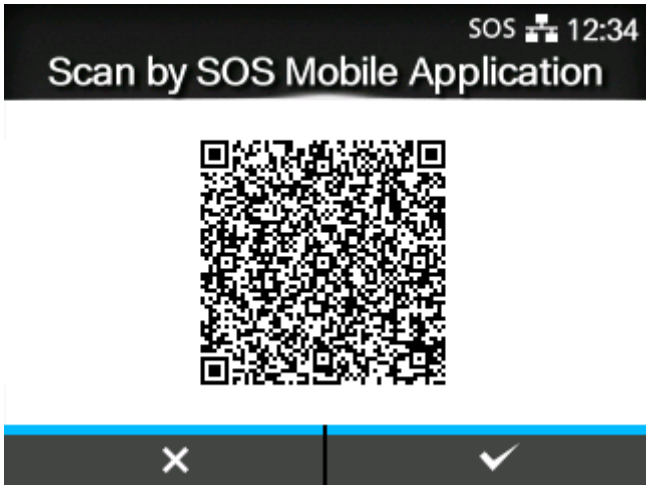

Shows the current product information with a QR code. Scan the QR code with a tablet or smartphone, and send it to the SOS cloud.

Appears only if you have selected [On-Demand] in the [SOS Mode] menu.

A specialized application is required to scan the QR code.

[Advanced]

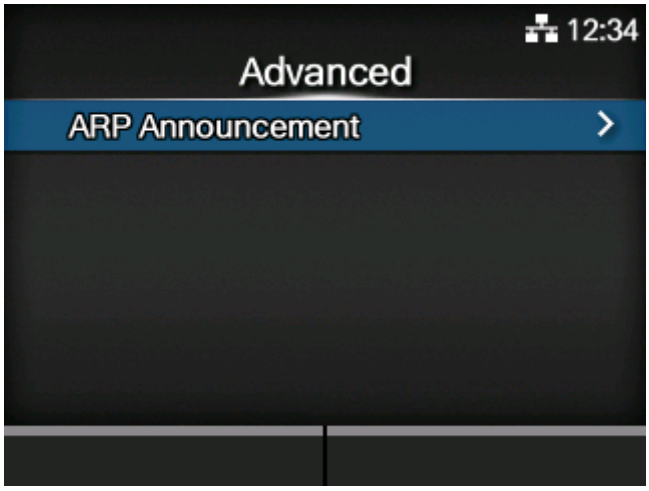

Set the advanced function for the interface.

The setting item is as follows:

ARP Announcement

Set the ARP announcement.

[ARP Announcement]

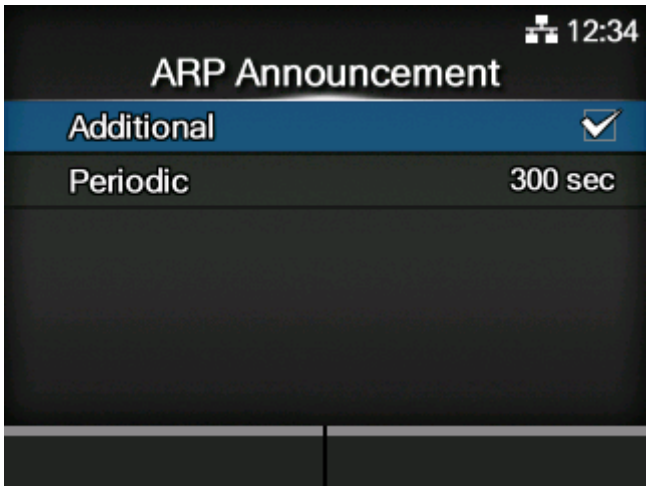

Set the functions for ARP announcement.

The ARP announcement is useful for updating other hosts mapping of a hardware address when the IP address or MAC address of the sender has changed.

The setting items are as follows:

Additional

Enable or disable the additional ARP announcement.

Periodic

Set the periodic timing for ARP announcement.

[Additional]

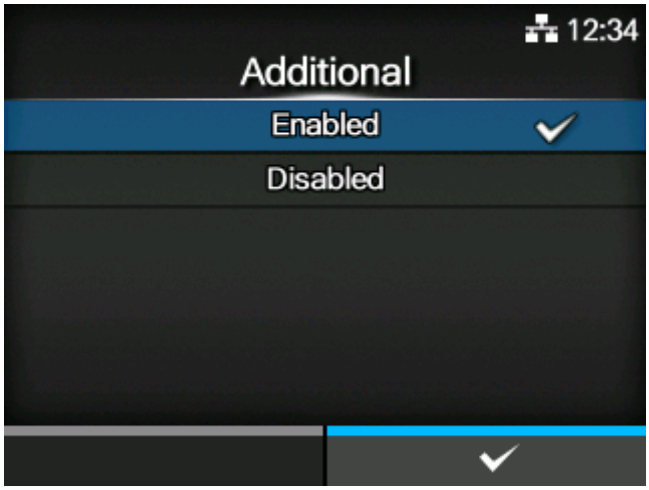

Set the additional ARP announcement.

The options are as follows:

Enabled

Enable the additional ARP announcement. The ARP is sent at 1, 2, 4, 8 and 16 seconds after the link up/DHCP assignment.

Disabled

Disable the additional ARP announcement. The ARP is only sent at 1 second after the link up/DHCP assignment.

[Periodic]

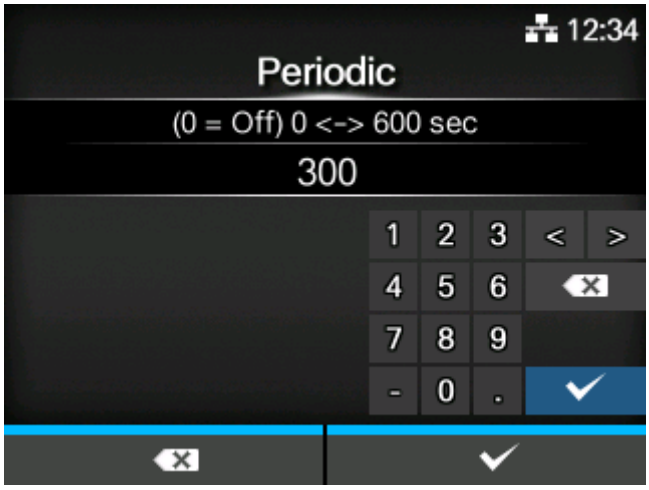

Set the interval of the ARP announcement in the range of 0 to 600 seconds.

Initial setting: 300 seconds

[IEEE1284]

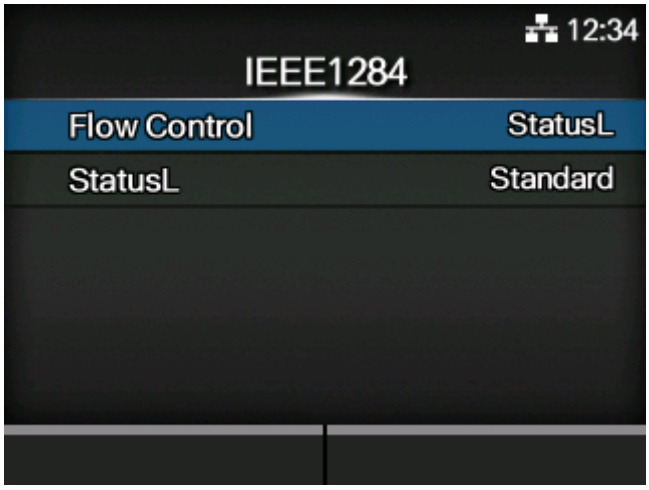

Set the IEEE1284 connection.

The setting items are as follows:

Flow Control

Set the communication protocol.

StatusL

Sets the status of the applicator error.

- Appears only if you have selected [StatusL] in the [Flow Control] menu.

BCC

Set the BCC check function.

- Appears only if you have selected [Status5] in the [Flow Control] menu.

[Flow Control]

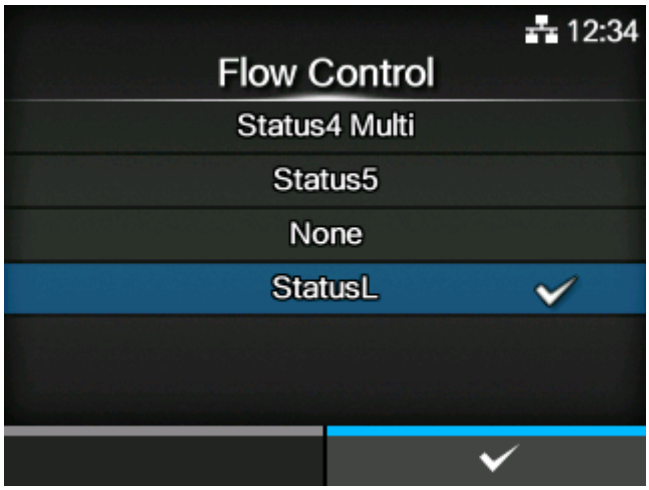

Set the communication protocol.

The options are as follows:

- [Status4 Multi]
- [Status5]
- [None]
- [StatusL]

- If [StatusL] is set in [Flow Control] for any one of network/IEEE1284/RS-232C in the [Interface] menu, [Applications] > [Applicator] > [Detailed Setting] > [Item Completion Condition] is fixed at [Apply End] and the setting cannot be changed.
- To set [Item Completion Condition] to [Print End], change all the [Flow Control] settings of network/IEEE1284/RS-232C in the [Interface] menu to the status other than [StatusL], and then set [Item Completion Condition] to [Print End].

[StatusL]

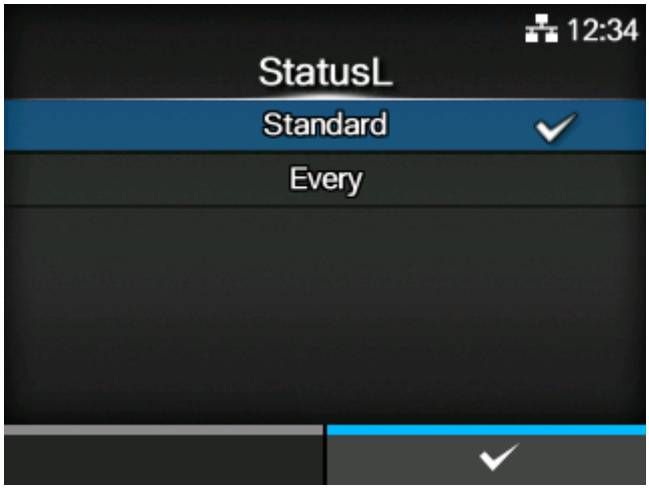

Sets the status of the applicator error.

Appears if you have selected [StatusL] in the [Flow Control] menu.

The options are as follows:

Standard

Applicator errors are given standard status.

Every

Applicator errors are given advanced status.

- [StatusL] cannot be set differently for each interface. (The settings are reflected on the [StatusL] of other communication interfaces.)

[BCC]

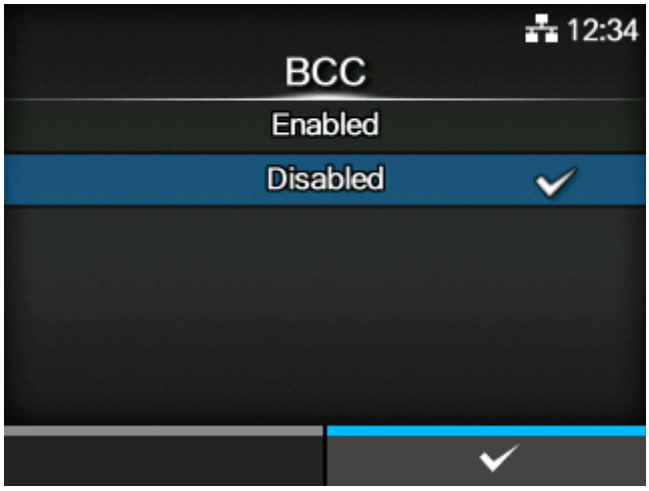

Enable or disable the BCC check function.

Appears only if you have selected [Status5] in the [Flow Control] menu.

The options are as follows:

Enabled

Enable the BCC check function.

Disabled

Disable the BCC check function.

[RS-232C]

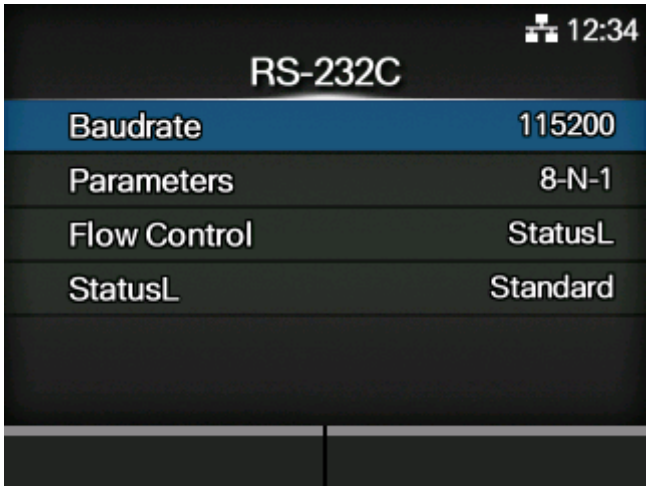

Set the RS-232C connection.

The setting items are as follows:

Baudrate

Set the communication speed.

Parameters

Set the data parameters.

Flow Control

Set the communication protocol.

StatusL

Sets the status of the applicator error.

- Appears only if you have selected [StatusL] in the [Flow Control] menu.

BCC

Set the BCC check function.

- Appears only if you have selected [STATUS5] in the [Flow Control] menu.

[Baudrate]

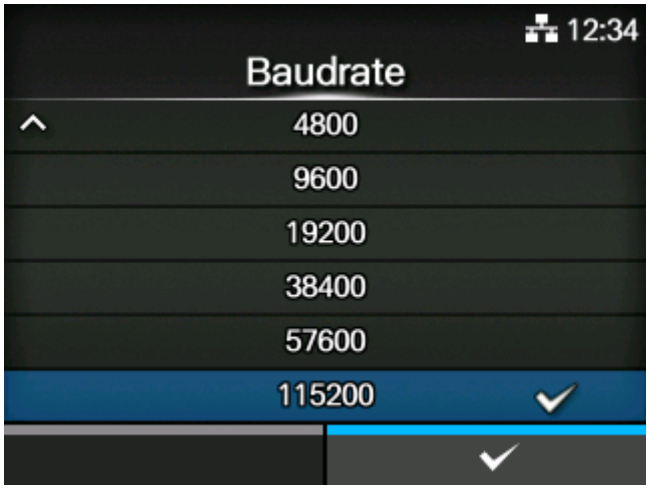

Set the baudrate (bps).

The options are as follows:

- [2400]
- [4800]
- [9600]
- [19200]
- [38400]
- [57600]
- [115200]

[Parameters]

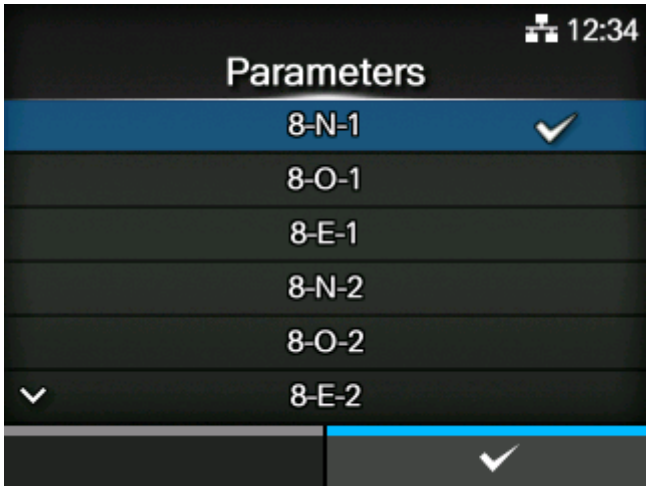

Set the data parameters.

The options are as follows:

Refer to the table below for the parameter configurations.

- [8-N-1]
- [8-O-1]
- [8-E-1]
- [8-N-2]
- [8-O-2]
- [8-E-2]
- [7-N-1]
- [7-O-1]
- [7-E-1]
- [7-N-2]
- [7-O-2]
- [7-E-2]

Parameter Configurations List

Parameters	Data length (bit)	Parity	Stop bit (bit)
8-N-1	8	NONE	1
8-O-1	8	ODD	1
8-E-1	8	EVEN	1
8-N-2	8	NONE	2
8-O-2	8	ODD	2
8-E-2	8	EVEN	2

Parameters	Data length (bit)	Parity	Stop bit (bit)
7-N-1	7	NONE	1
7-O-1	7	ODD	1
7-E-1	7	EVEN	1
7-N-2	7	NONE	2
7-O-2	7	ODD	2
7-E-2	7	EVEN	2

[Flow Control]

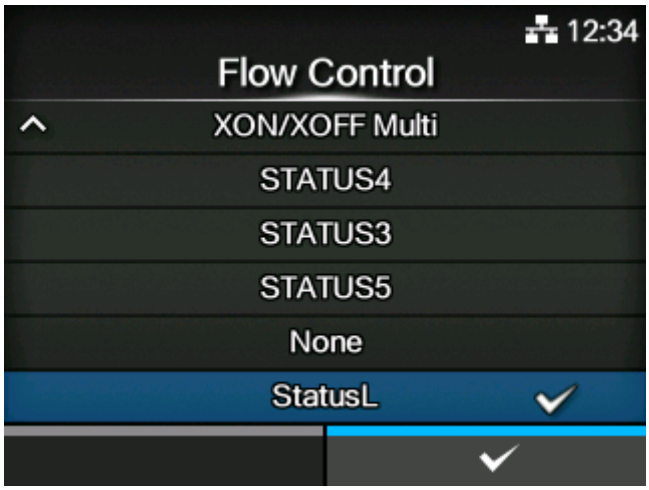

Set the communication protocol.

The options are as follows:

- [READY/BUSY Multi]
- [XON/XOFF Multi]
- [STATUS3]
- [STATUS4]
- [STATUS5]
- [None]
- [StatusL]

- If [StatusL] is set in [Flow Control] for any one of network/IEEE1284/RS-232C in the [Interface] menu, [Applications] > [Applicator] > [Detailed Setting] > [Item Completion Condition] is fixed at [Apply End] and the setting cannot be changed.
- To set [Item Completion Condition] to [Print End], change all the [Flow Control] settings of network/IEEE1284/RS-232C in the [Interface] menu to the status other than [StatusL], and then set [Item Completion Condition] to [Print End].

[StatusL]

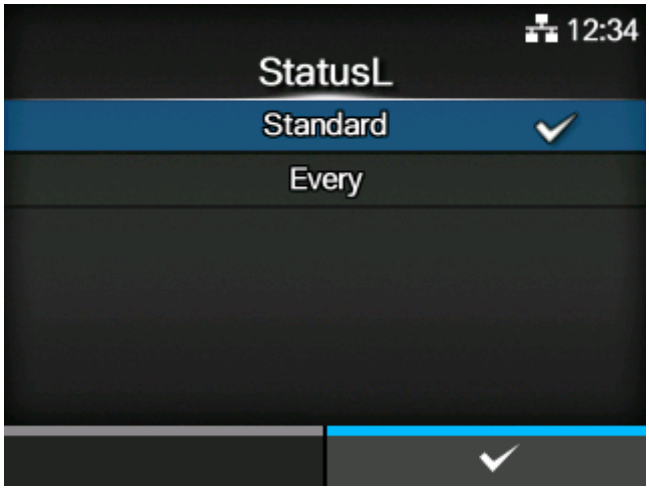

Sets the status of the applicator error.

Appears if you have selected [StatusL] in the [Flow Control] menu.

The options are as follows:

Standard

Applicator errors are given standard status.

Every

Applicator errors are given advanced status.

- [StatusL] cannot be set differently for each interface. (The settings are reflected on the [StatusL] of other communication interfaces.)

[BCC]

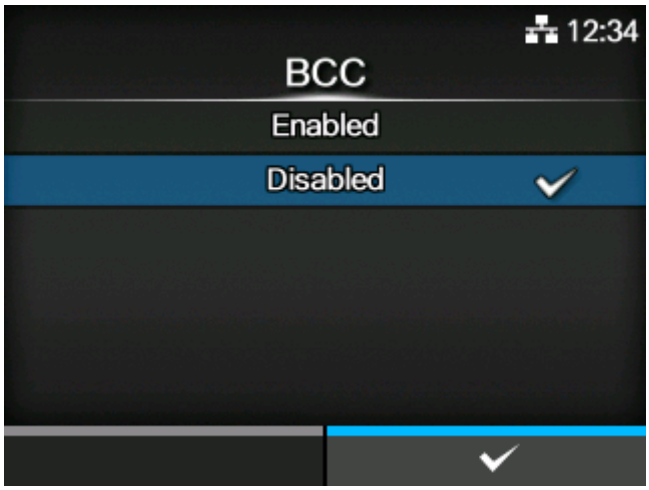

Enable or disable the BCC check function.

Appears only if you have selected [STATUS5] in the [Flow Control] menu.

The options are as follows:

Enabled

Enable the BCC check function.

Disabled

Disable the BCC check function.

[Ignore CR/LF]

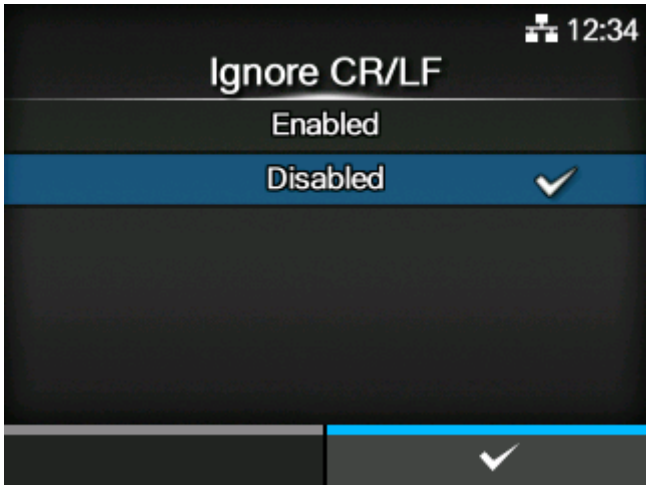

Set whether to ignore the CR/LF code (0x0D / 0x0A) in the received data.

The options are as follows:

Enabled

Ignore the CR/LF code.

Disabled

Do not ignore the CR/LF code.

[Ignore CAN/DLE]

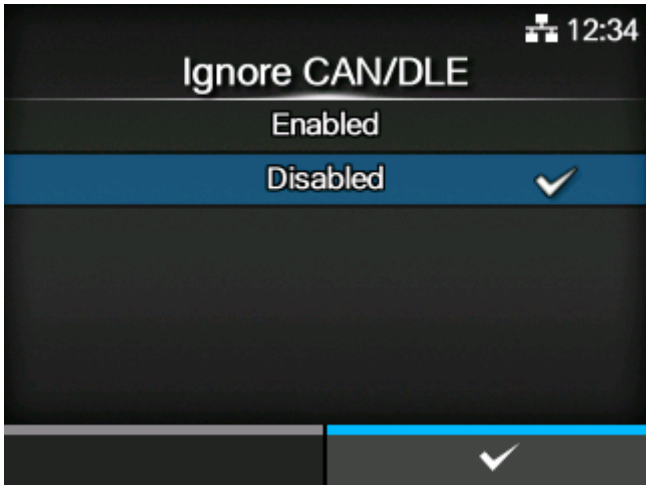

Set whether to ignore the CAN/DLE code (0x18 / 0x10) in the received data.

The options are as follows:

Enabled

Ignore the CAN/DLE code.

Disabled

Do not ignore the CAN/DLE code.

[Applications] Menu

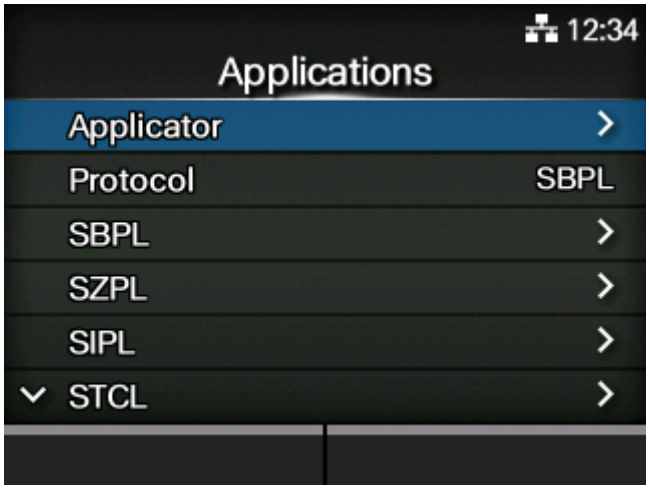

The following settings are available in the [Applications] menu:

Applicator

Set the applicator.

Protocol

Set the printer language.

SBPL

Set the SBPL printer command.

SZPL

Set the SZPL printer command.

SIPL

Set the SIPL printer command.

STCL

Set the STCL printer command.

SDPL

Set the SDPL printer command.

SEPL

Set the SEPL printer command.

AEP

Set the functions for AEP (Application Enabled Printing).

[Applicator]

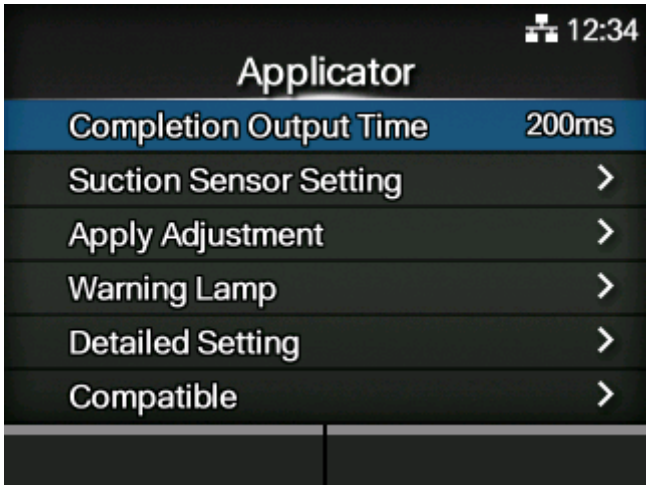

This is the menu for setting the applicator.

The setting items are as follows:

Completion Output Time

Set the timing that the [Applying Completion] signal is output.

Suction Sensor Setting

Set the suction sensor.

Apply Adjustment

Set the applicator.

Warning Lamp

Set the type of warning lamp and its operations.

Detailed Setting

Set the applicator's advanced settings.

Compatible

Set the compatible mode for the applicator.

[Completion Output Time]

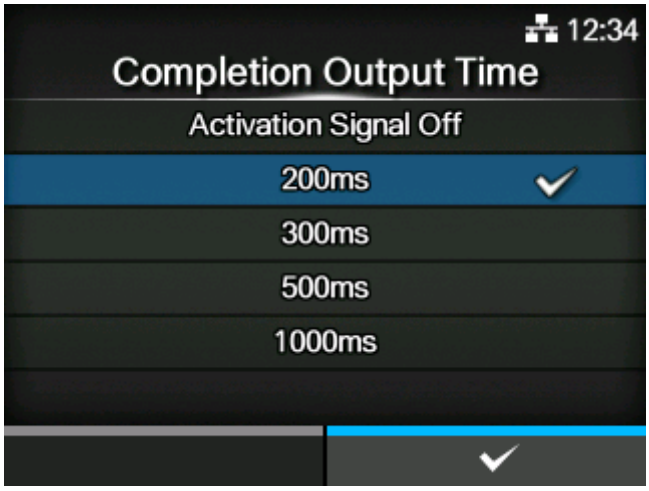

Set the timing that the [Applying Completion] signal from the external output terminal is output.

The options are as follows:

Activation Signal Off

Output until the activation signal turns off.

200ms

Output for 200 milliseconds after application is complete.

300ms

Output for 300 milliseconds after application is complete.

500ms

Output for 500 milliseconds after application is complete.

1000ms

Output for 1000 milliseconds after application is complete.

[Suction Sensor Setting]

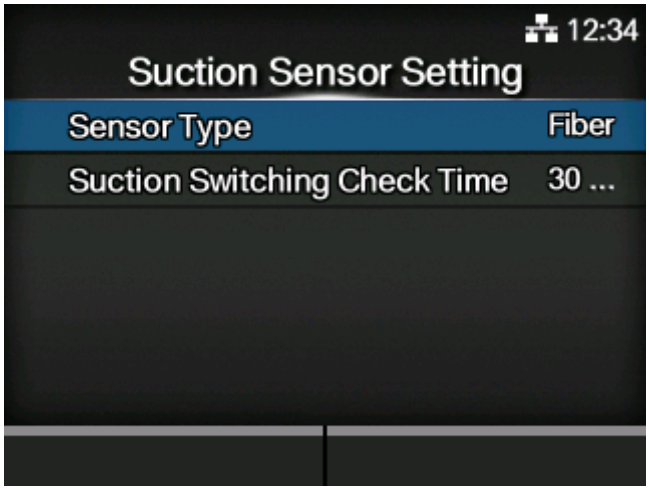

Set the suction sensor.

The setting items are as follows:

Sensor Type

Set the type of suction sensor.

Suction Switching Check Time

Set the time from the print completion until the suction error is confirmed.

[Sensor Type]

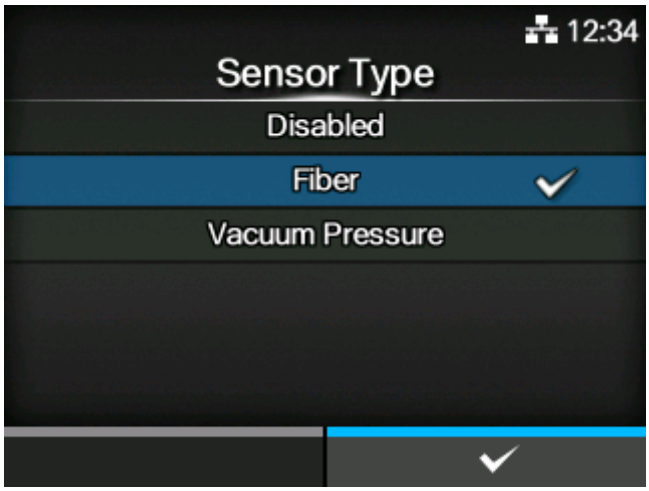

Set the type of suction sensor.

The options are as follows:

Disabled

Disables the suction sensor. Use this if the suction sensor is not operating correctly, such as if it is damaged. Normally, do not set it.

Fiber

Set this if you are using the fiber sensor. Normally, do not change this setting.

Vacuum Pressure

Set this if you are using the vacuum pressure sensor. Normally, do not change this setting.

[Suction Switching Check Time]

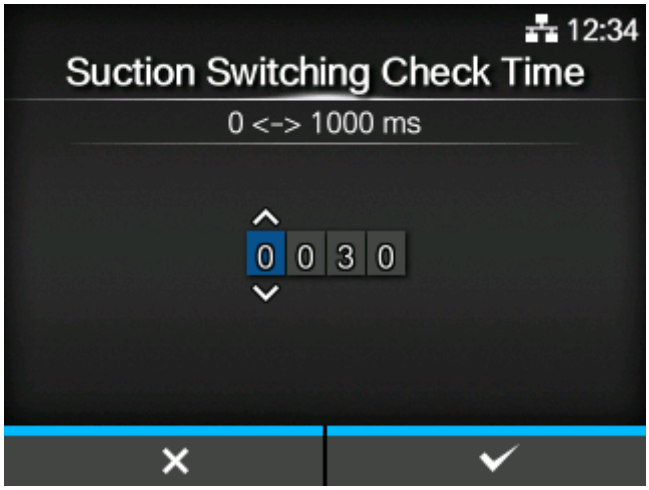

Set the time from the print completion until the suction error is confirmed.

The setting range is from 0 to 1000.

[Apply Adjustment]

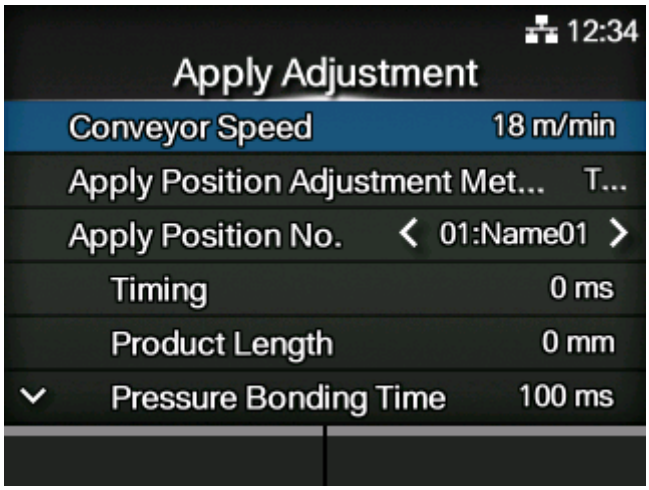

Set the applicator.

The setting items are as follows:

Conveyor Speed

Set the speed of the conveyor.

Apply Position Adjustment Method

Set the method for adjusting the position to apply the label in reference to the package.

Apply Position No.

Select the maximum 20 names of the location registered for the position the label is applied in which are registered the timing or position, the length of the package, the pressure bonding time, and the blowing time, and then change the name.

Timing

Set the delay time at which to apply the label after the [Activate Apply] signal or the [Activate Apply (Level)] signal is input.

- Appears only if you have selected [Timing] in the [Apply Position Adjustment Method] menu.

Position

Set the delay position at which to apply the label after the [Activate Apply] signal or the [Activate Apply (Level)] signal is input.

- Appears only if you have selected [Position] in the [Apply Position Adjustment Method] menu.

Product Length

Set the length of the package.

Pressure Bonding Time

Set the pressure bonding time for the label.

Blowing Time

Set the blowing time for the label.

Liner Rewinding Adjustment

Set to adjust the force when rewinding the liner.

Setting 1 to Setting 5

This is an extra setting.

[Conveyor Speed]

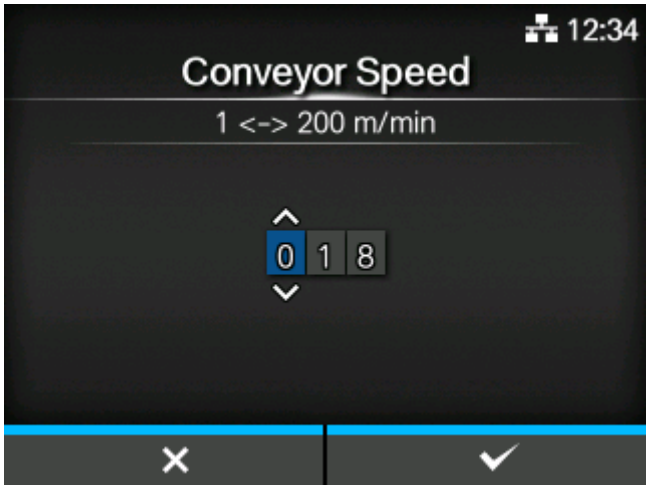

Set the speed of the conveyor.

- This changes the settings of the product, this function does not change the speed of the actual conveyor.

The setting range is from 1 to 200. Set the [Conveyor Speed] and [Product Length], and then calculate the timing to mask the [Activate Apply] signal or the [Activate Apply (Level)] signal. The activate signal is masked during application operations at 1 m/min (3.28 feet/min).

- The mask timing is the time for the package to pass, which is calculated from the length of the package. During the time, the package detection sensor does not detect the package until it passes. Performance overload is not detected during this time.

[Apply Position Adjustment Method]

Set the method for adjusting the position to apply the label in reference to the package.

The options are as follows:

Timing

Labels are applied after the time set for the timing has passed (printing is done if [Wait Printing] is set for the delivery method).

Position

Labels are applied after moving the distance from the set position (printing is done if [Wait Printing] is set for the delivery method).

If you have selected the position, be sure to do the [Conveyor Speed] settings.

[Apply Position No.]

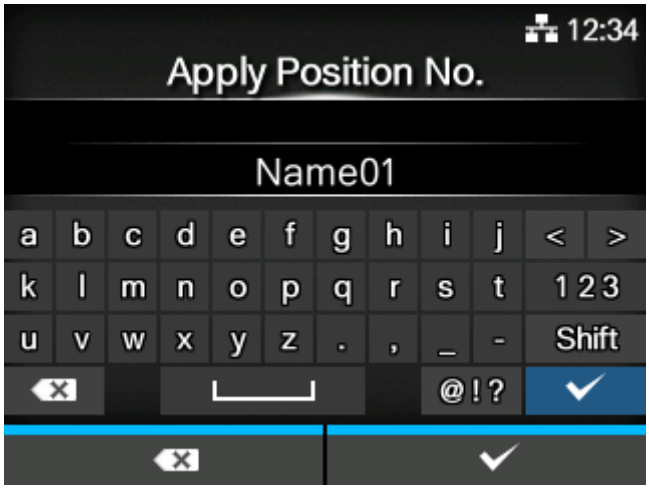

Set the name of the location registered for the position the label is applied.

You can enter a maximum of 15 letters (upper and lower case) and numbers.

You can register a maximum of 20 positions to apply labels. (The name of the location registered for the position the label is applied consists of the timing or position, the length of the package, the pressure bonding time, and the blowing time, as one set.)

[Timing]

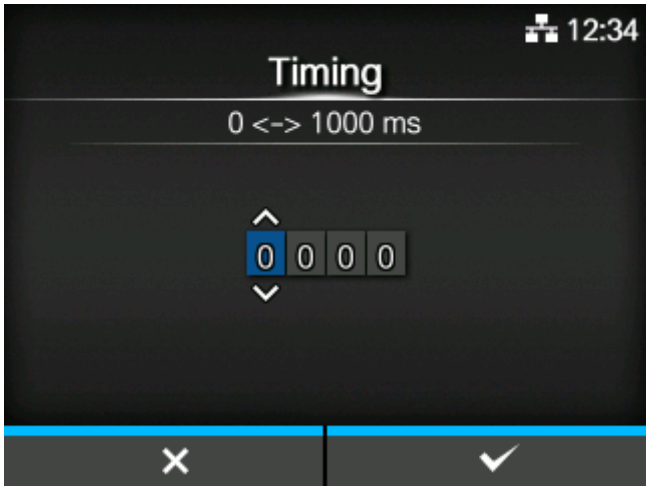

Set the delay time at which to apply the label after the [Activate Apply] signal or the [Activate Apply (Level)] signal is input.

Appears only if you have selected [Timing] in the [Apply Position Adjustment Method] menu.

The setting range is from 0 to 1000.

[Position]

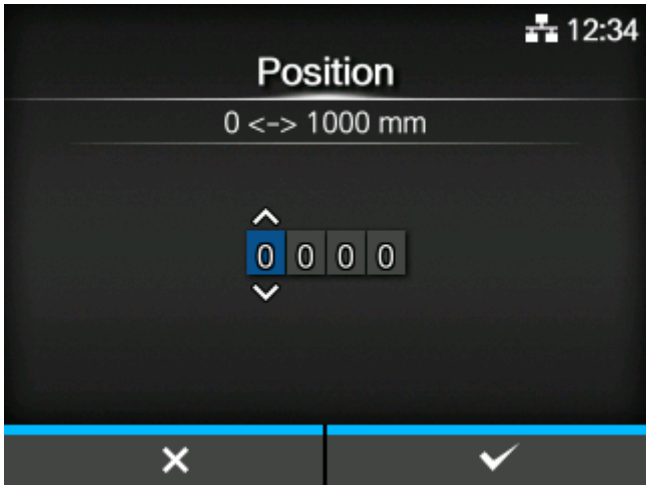

Set the delay position at which to apply the label after the [Activate Apply] signal or the [Activate Apply (Level)] signal is input.

Appears only if you have selected [Position] in the [Apply Position Adjustment Method] menu.

The setting range is from 0 to 1000.

Calculate the position to apply the label from the conveyor's speed and the adjusted position to apply the label. Be sure to do the [Conveyor Speed] settings.

[Product Length]

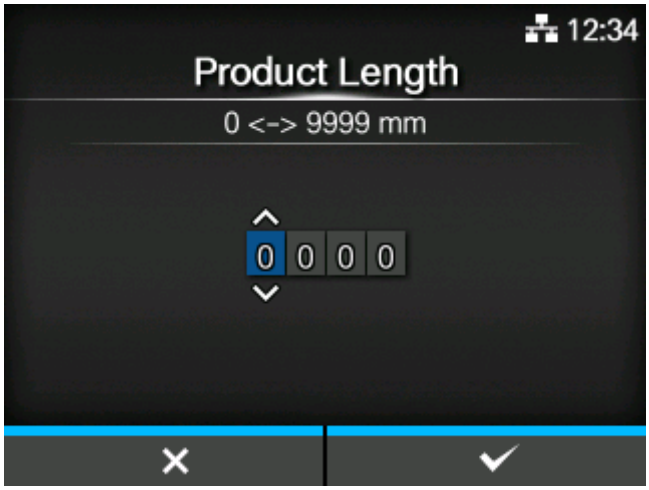

Set the length of the package.

The setting range is from 0 to 9999.

Prevents double labeling, even if the package detection sensor detects a package that is irregular.

Set the [Conveyor Speed] and [Product Length], and then calculate the timing to mask the [Activate Apply] signal or the [Activate Apply (Level)] signal. When [Product Length] is set to 0, the activate signal is masked during application operations.

- The mask timing is the time for the package to pass, which is calculated from the length of the package. During the time, the package detection sensor does not detect the package until it passes. Performance overload is not detected during this time.

[Pressure Bonding Time]

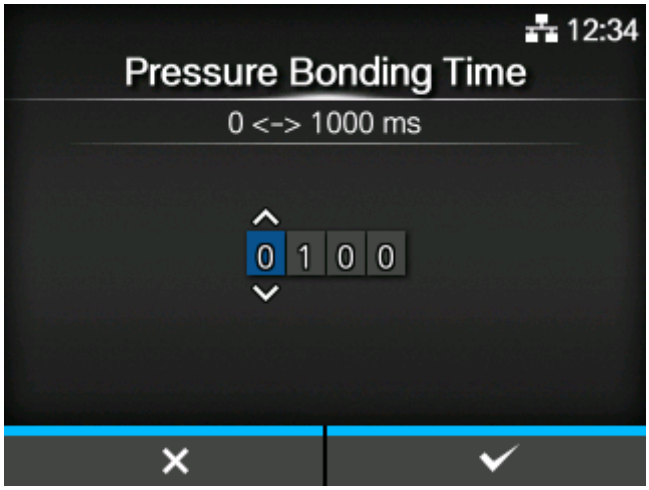

Set the pressure bonding time for the label.

The setting range is from 0 to 1000.

[Blowing Time]

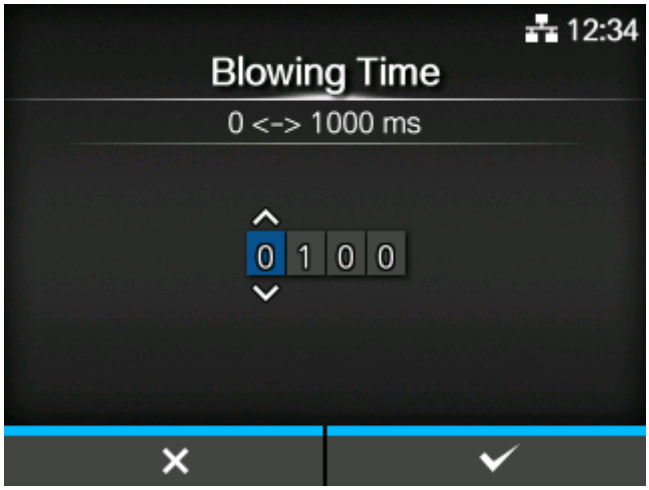

Set the blowing time for the label.

The setting range is from 0 to 1000.

[Liner Rewinding Adjustment]

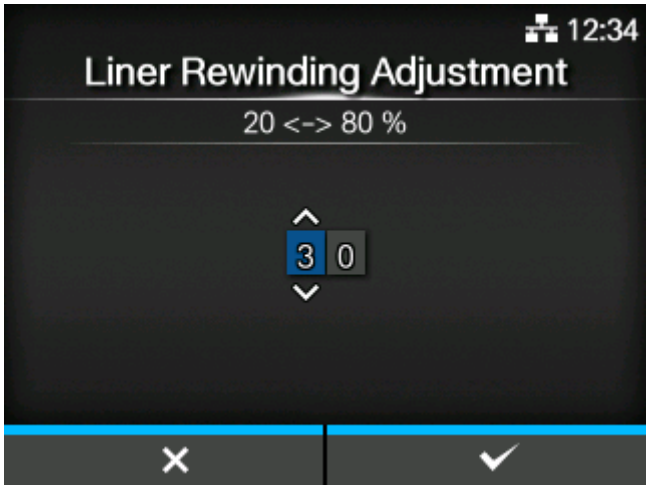

Set to adjust the force when rewinding the liner.

Increasing the value increases the force when rewinding the liner.

The setting range is from 20 to 80.

[Setting 1] to [Setting 5]

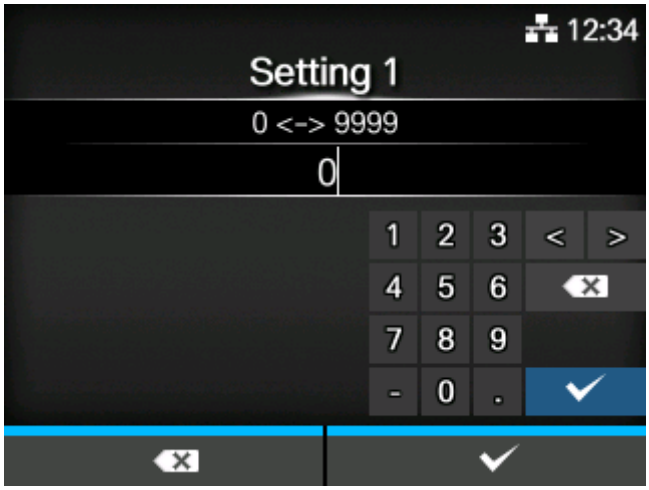

This is an extra setting.

The setting range is from 0 to 9999.

[Warning Lamp]

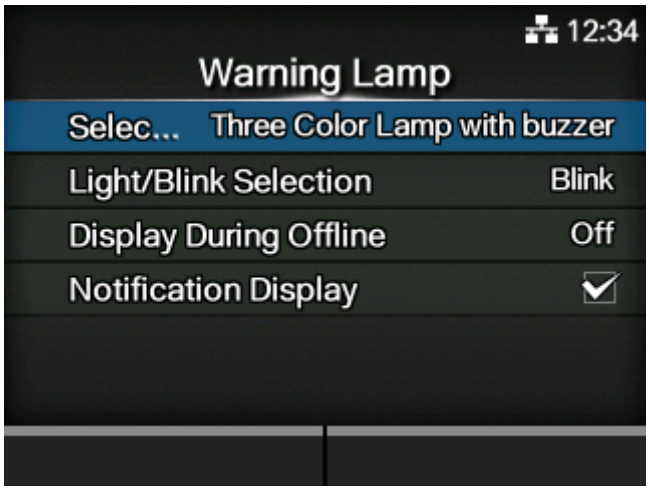

Set the lighting of the warning lamp.

The setting items are as follows:

Select Type

Set the type of warning lamp.

Light/Blink Selection

Set the way the red and yellow warning lamp lights when there is an error or a warning.

Display During Offline

Set the way the red warning lamp lights when the product is in Offline mode.

Notification Display

Sets whether the warning lamp lights when the [Notifications] setting is used.

[Select Type]

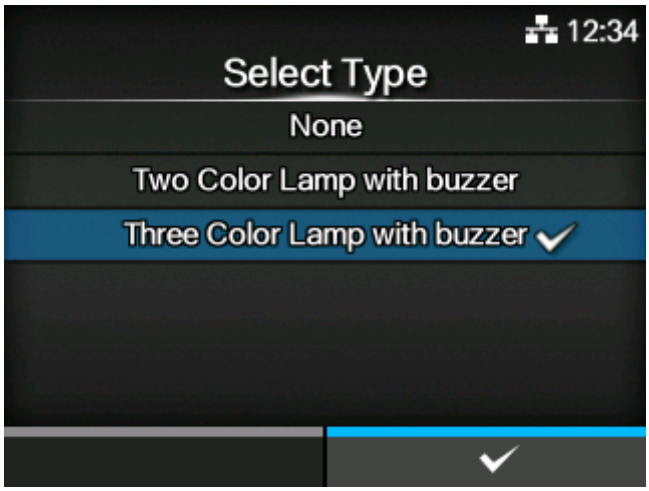

Set the type of warning lamp.

The options are as follows:

None

The warning lamp does not operate.

Two Color Lamp with buzzer

Set the operation of the two color lamp with buzzer.

Three Color Lamp with buzzer

Set the operation of the three color lamp with buzzer.

[Light/Blink Selection]

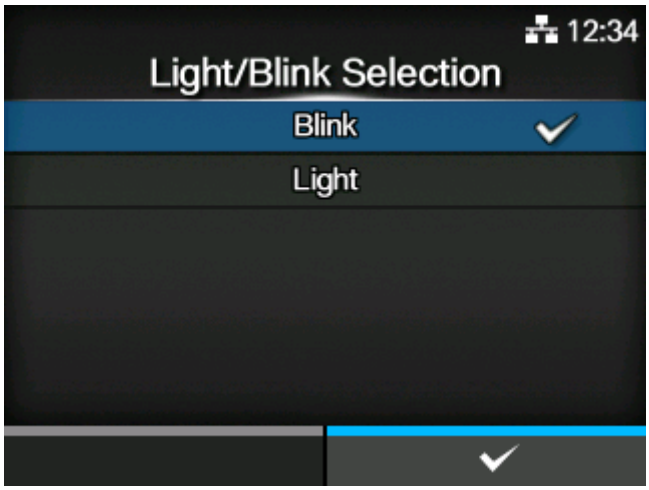

Set the way the red and yellow warning lamp lights when there is an error or a warning.

The options are as follows:

Blink

Flashes red when there is an error.

Flashes yellow when there is a warning. (when there is a three level buzzer)

Light

Lights red when there is an error.

Lights yellow when there is a warning. (when there is a three level buzzer)

[Display During Offline]

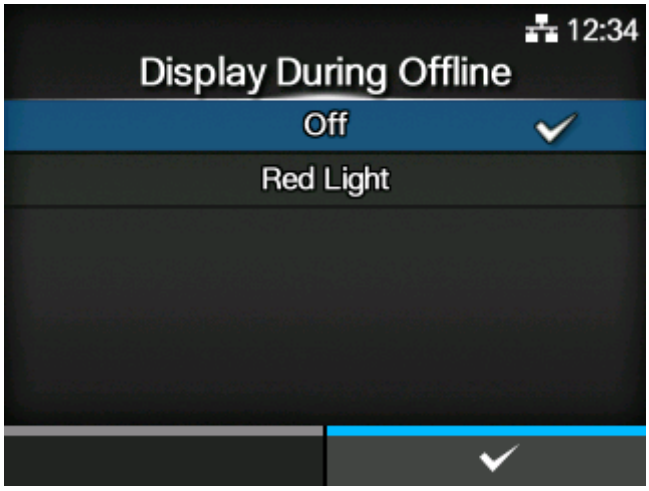

Set the way the red warning lamp lights when the product is in Offline mode.

The options are as follows:

Off

Red is off in Offline mode.

Red Light

Red is on in Offline mode.

[Notification Display]

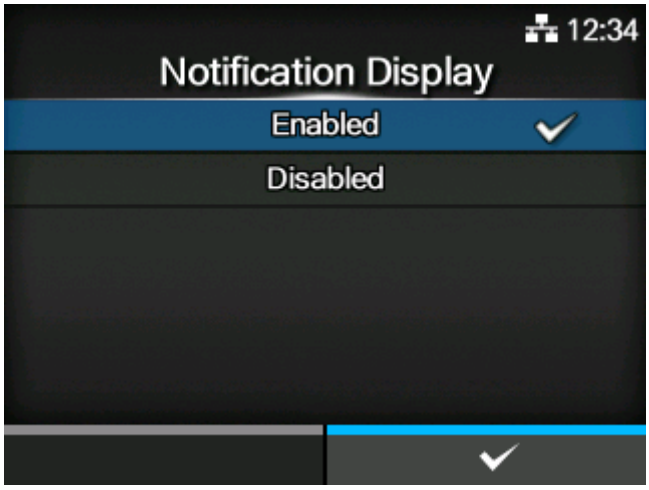

Sets whether the warning lamp lights when [Notifications] is used.

The options are as follows:

Enabled

The warning lamp lights when there is notification for [Notifications].

Disabled

The warning lamp does not light when there is notification for [Notifications].

[Detailed Setting]

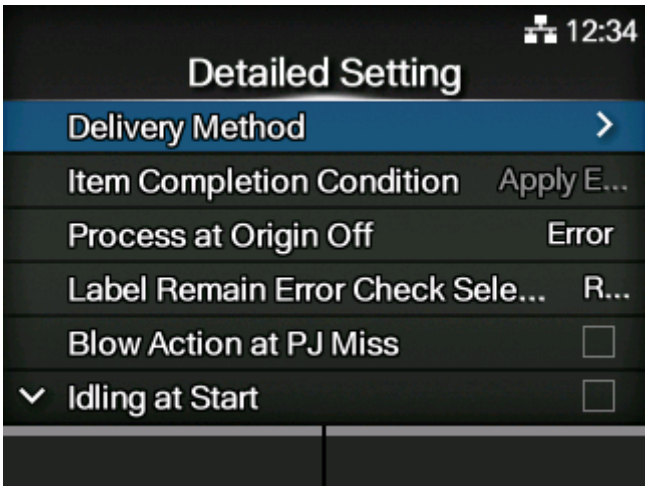

Set the applicator's advanced settings.

The setting items are as follows:

Delivery Method

Sets the label delivery method.

Item Completion Condition

Set the completion reference for print data.

Process at Origin Off

Set the processes during "Cylinder off", "Suction on", and "Press on".

Label Remain Error Check Select

Set how errors are detected if the label remains on the suction plate without sticking to the package.

Blow Action at PJ Miss

For the pressure jet (PJ) application method, set it to operate when the cylinder advances and does not contact the package and the pressure sensor detects no pressure.

Idling at Start

Set whether to do a test operation of the actuators, such as the cylinder, when you power on the product.

Reset Key Press Display

Set whether to display [ONLINE] and [FEED] in the offline screen until the error is cleared if there is a product error.

Cancel With Reset

Set whether to cancel the print data that has been received when an error is cleared.

Mechanical Confirmation

Set whether to check the operations of the product.

[Delivery Method]

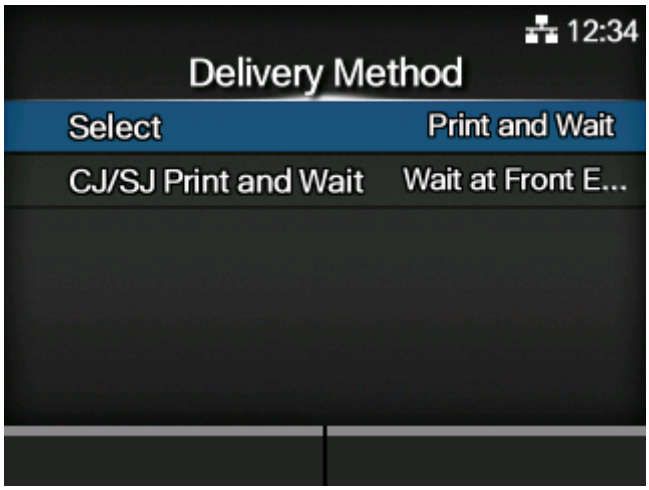

Sets the label delivery method.

The setting items are as follows:

Select

Select the label delivery method.

CJ/SJ Print and Wait

Set the operation when the application method is set to cylinder jet (CJ) method and [Delivery Method] is [Print and Wait].

- The product does not support the strong jet (SJ) method.

[Select]

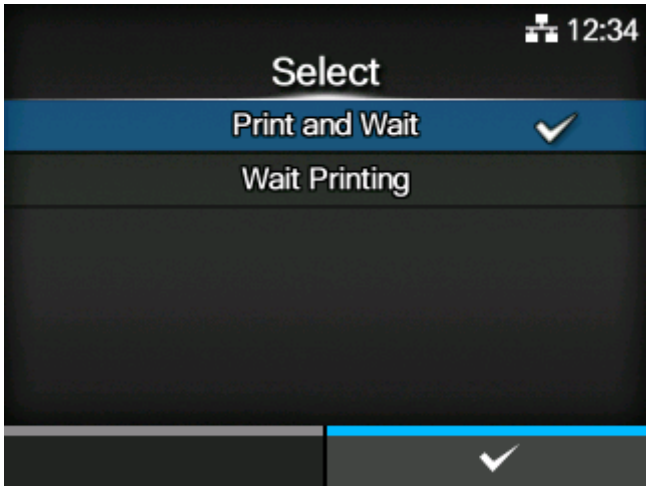

Select the label delivery method.

The options are as follows:

Print and Wait

If there is print data, a label is printed and sucked, and then applied according to the input of [Activate Apply] or [Activate Apply (Level)] from an external input signal.

Wait Printing

If there is print data, a label is printed, sucked, and applied according to the input of [Activate Apply] or [Activate Apply (Level)] from an external input signal.

[CJ/SJ Print and Wait]

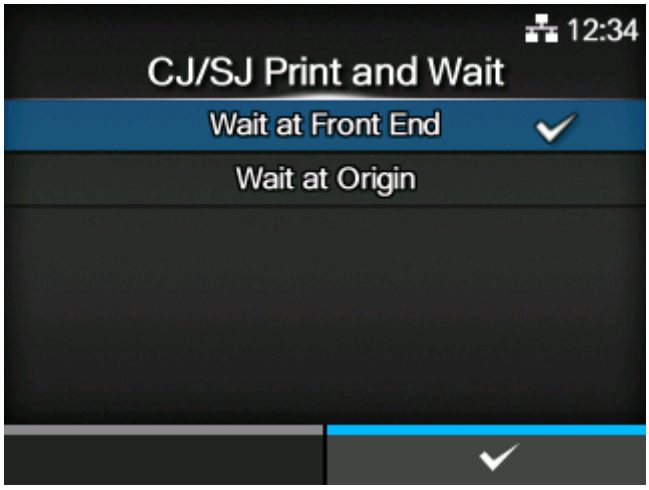

Set the operation when the application method is set to cylinder jet (CJ) method and [Delivery Method] is [Print and Wait].

The options are as follows:

Wait at Front End

After printing and suction, the cylinder moves to its forward end, and then a label is applied according to the input of [Activate Apply] or [Activate Apply (Level)] from an external input signal.

Wait at Origin

After printing and suction, the cylinder moves to its forward end and a label is applied according to the input of [Activate Apply] or [Activate Apply (Level)] from an external input signal.

- The product does not support the strong jet (SJ) method.

[Item Completion Condition]

Set the completion reference for print data.

The options are as follows:

Apply End

The completion reference for print data is when application finishes.

If an error occurs during the label printing and application operations, then labels are reissued with the content from that operation until the label printing and application operations are completed after the error is cleared.

Print End

The completion reference for print data is when printing finishes.

If an error occurs during the label printing operation, then labels are reissued with the content from that operation until the label printing operation is completed after the error is cleared. If an error occurs during the label application operations, then a normal label is considered to have been printed and the next label is printed after the error is cleared.

- If [StatusL] is set in [Flow Control] for any one of network/IEEE1284/RS-232C in the [Interface] menu, then it is fixed at [Apply End] and the setting cannot be changed.
- To set [Item Completion Condition] to [Print End], change all the [Flow Control] settings of network/IEEE1284/RS-232C in the [Interface] menu to the status other than [StatusL], and then set [Item Completion Condition] to [Print End].

  This setting change is necessary to set [Print End], which is the item completion condition of Status3, etc.
- If the power is turned off during an operation, the system initializes so reissue is not done.

[Process at Origin Off]

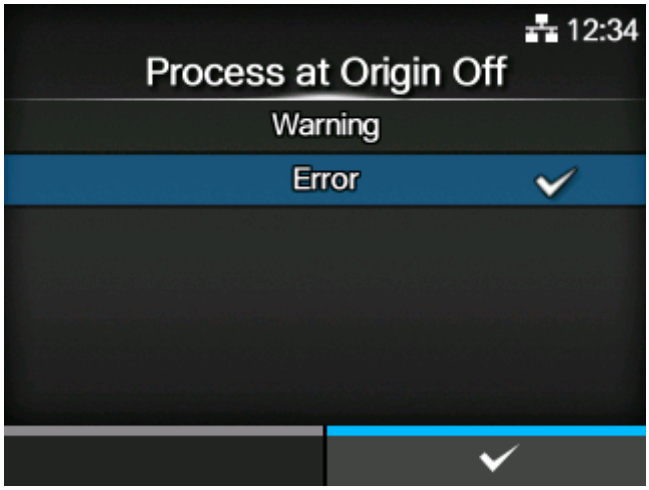

Set the processes during "Cylinder off", "Suction on", and "Press on".

The options are as follows:

Warning

A warning message appears if "Cylinder off", "Suction on", or "Press on" occurs.

Error

An error occurs if "Cylinder off", "Suction on", or "Press on" occurs.

- Warning messages and error processes are shown below.

Status	Meaning	Warning	Error
Cylinder off	The cylinder has not returned to its origin.	The cylinder has not returned to its origin. Check the air supply.	Cylinder error (backward) Error Message 1090 (Cylinder Error (Backward))
Suction on	A label is stuck on the suction plate.	There is a label on the suction plate. Remove the label.	Apply error (label is remaining) Error Message 1083 (Apply Error (Label Is Remaining))
Press on	A label is being pressed on.	The pressure sensor is on. Check the pressure sensor.	Cylinder error (forward)) Error Message 1089 (Cylinder Error (Forward))

[Label Remain Error Check Select]

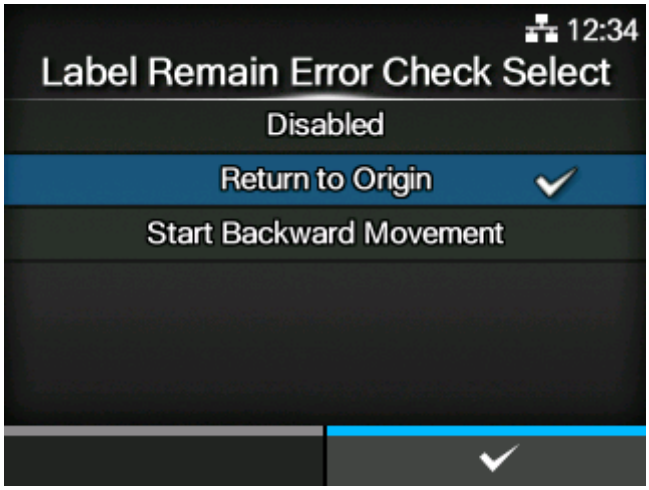

Set how errors are detected if the label remains on the suction plate without sticking to the package.

The options are as follows:

Disabled

Control for detecting an error if there is a label remaining is not done.

Return to Origin

The cylinder returns to its origin and control for detecting an error if there is a label remaining starts.

Start Backward Movement

The cylinder starts moving backward and control for detecting an error if there is a label remaining starts.

[Blow Action at PJ Miss]

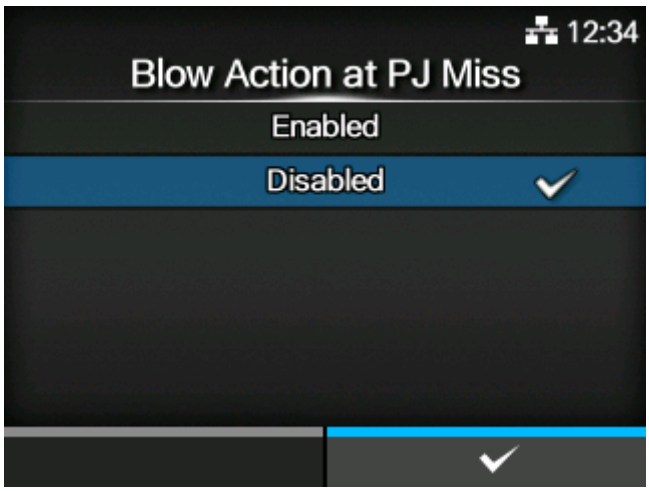

For the pressure jet (PJ) application method, set it to operate when the cylinder advances and does not contact the package and the pressure sensor detects no pressure.

The options are as follows:

Enabled

If the cylinder moves forward and reaches its forward end without making contact with the package and the pressure sensor does not react, the label is blown and when the blowing time is exceeded the cylinder returns.

In this case, an Apply error (missed) does not occur.

Disabled

An Apply error (missed) occurs when the cylinder advances and does not contact the package and the pressure sensor detects no pressure.

[Idling at Start]

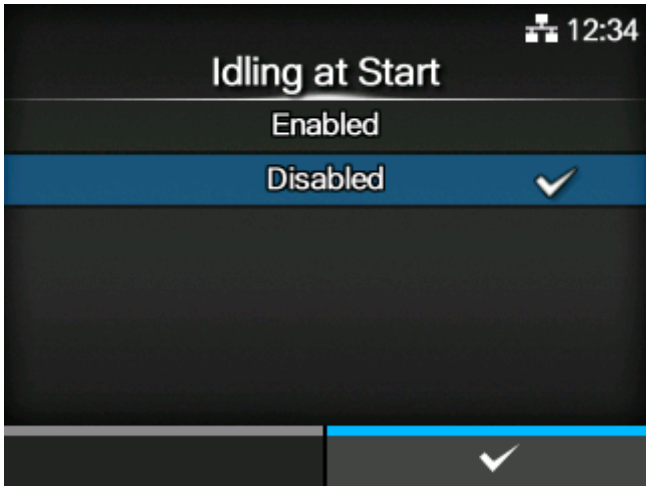

Set whether to do a test operation of the actuators, such as the cylinder, when you power on the product.

The options are as follows:

Enabled

A test run operation is done.

Disabled

A test run operation is not done.

[Reset Key Press Display]

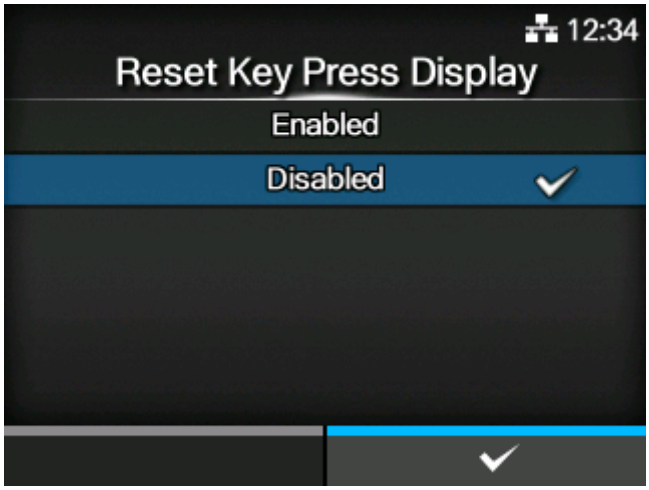

Set whether to display [ONLINE] and [FEED] in the offline screen until the error is cleared if there is a product error.

The options are as follows:

Enabled

The Offline screen appears as shown below.

You cannot do [ONLINE] or [FEED] operations until you press the button to clear the product error.

Disabled

The Offline screen appears as shown below.

You can do [ONLINE] and [FEED] operations even if you do not press the button to clear the product error.

[Cancel With Reset]

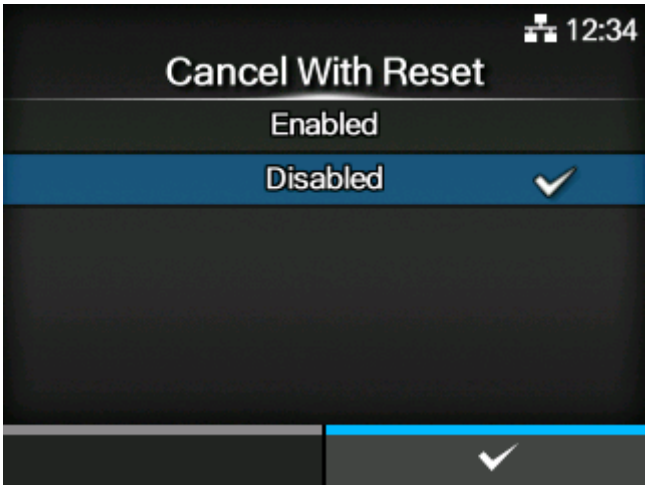

Set whether to cancel the print data that has been received when an error is cleared.

The options are as follows:

Enabled

A cancel operation is done.

Disabled

A cancel operation is not done.

[Mechanical Confirmation]

Set whether to check the operations of the product.

The setting items are as follows:

Liner Rewinding Confirmation

Select to confirm rewinding of liner.

Nip Roller Lever Confirmation

Select to confirm the nip lock.

[Liner Rewinding Confirmation]

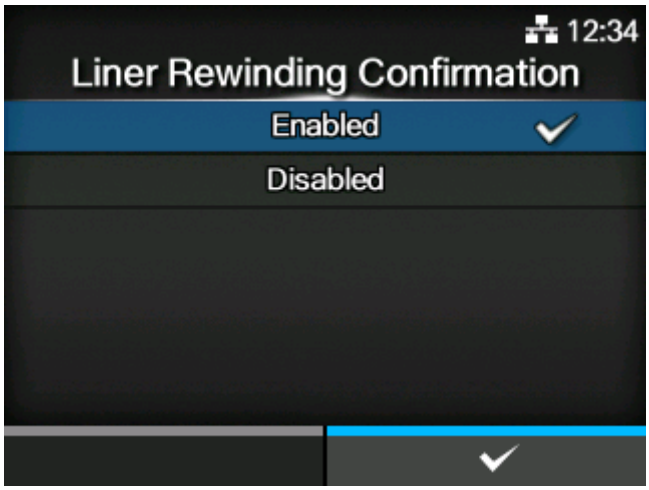

Set whether to detect liner rewind errors.

The options are as follows:

Enabled

Liner rewind errors are detected.

Disabled

Liner rewind errors are not detected.

[Nip Roller Lever Confirmation]

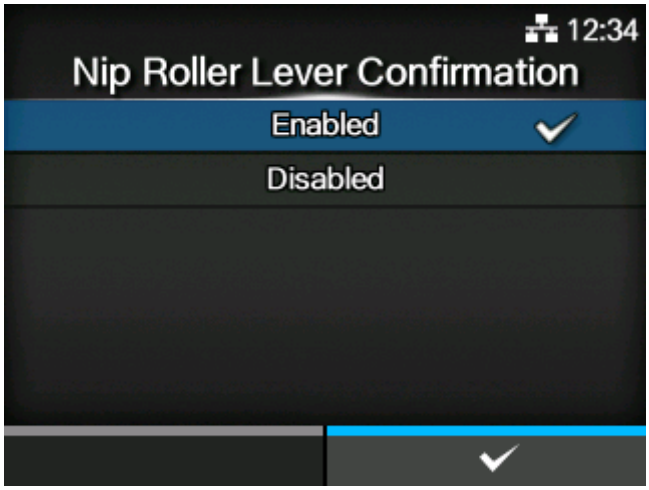

Set whether to confirm the open/close state of the nip lock lever.

The options are as follows:

Enabled

An error message appears if the nip lock lever is not closed.

Disabled

The open/close state of the nip lock lever is not confirmed.

[Compatible]

Set the compatible mode for the applicator.

The setting item is as follows:

LR4800RV Compatible

Set whether to enable compatibility with LR4800RV.

[LR4800RV Compatible]

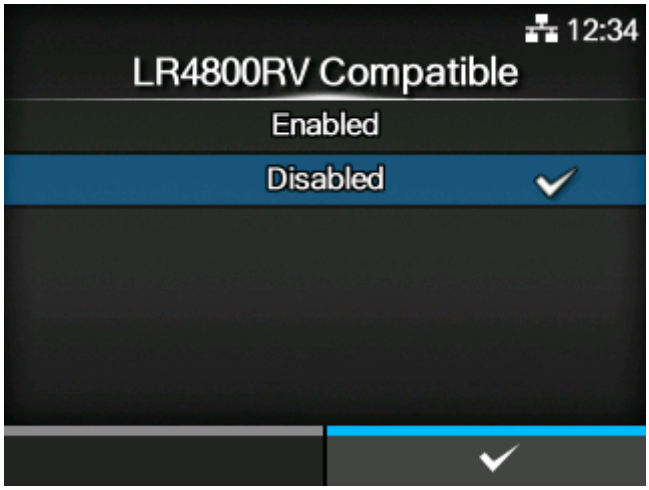

Set whether to enable compatibility with LR4800RV.

The options are as follows:

Enabled

Compatibility with LR4800RV is enabled.

When the system is Online and Print Ready, the Apply Ready signal turns on, even if there is no print data.

Even if the product detects Label Near End, a Label Near End response is not sent even by status return (ENQ)*.

* There is no notification by external signal, warning lamp, or on the display.

Disabled

Compatibility with LR4800RV is not enabled.

[Protocol]

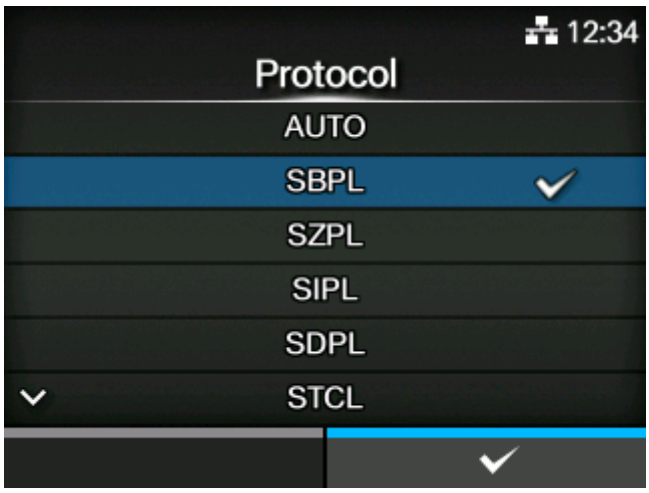

Set the printer language.

The options are as follows:

AUTO

Automatically analyze the received print data and set the printer language. In [AUTO] mode, the product can change the language after startup by receiving another language.

SBPL

Set when you use the SBPL printer language or XML.

SZPL

Set when you use the SZPL printer language.

SIPL

Set when you use the SIPL printer language.

SDPL

Set when you use the SDPL printer language.

STCL

Set when you use the STCL printer language.

SEPL

Set when you use the SEPL printer language.

(When [AUTO] is selected in the [Protocol] menu)

- A message prompting you to restart the product will appear on the Online/Offline screen if you select [AUTO]. In such a case, reboot the product to apply the settings.
- Once the printer language is fixed, the name of the printer language will appear on the Online/Offline screen. The area to show the name of the printer language will remain blank until the printer language is finalized.

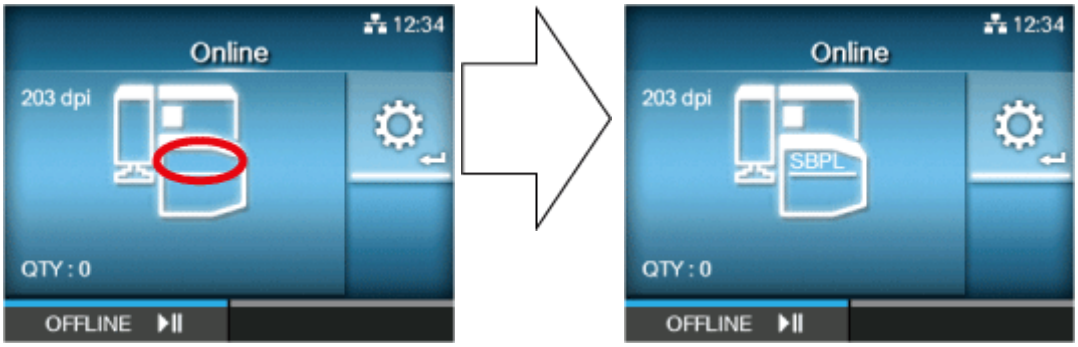

The area remains blank until the printer language is finalized.

When the print data has been sent in SBPL.

- Printer language is finalized with the received print data.
- When [SBPL] > [Standard Code] in the [Applications] menu is disabled, the [Protocol] setting will be changed to [SBPL].

[SBPL]

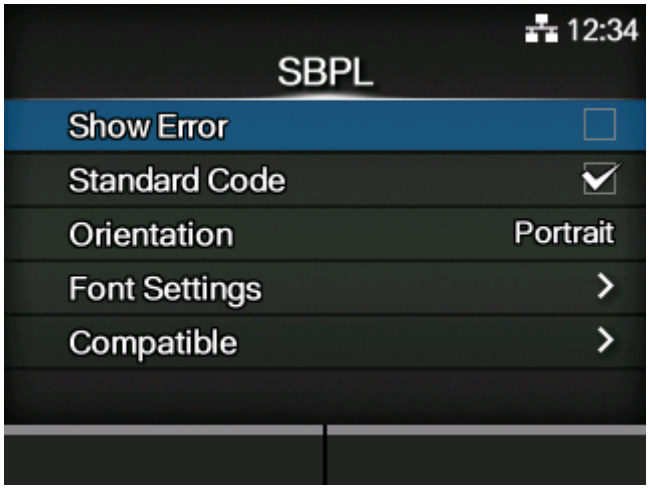

SBPL (Sato Barcode Printer Language) is the common command that controls SATO barcode label printers.

To use SBPL as a printer command, set the following items:

Show Error

Enable or disable the command error indication.

Standard Code

Set the protocol code.

Orientation

Set the layout for printing.

Font Settings

Set the font.

Compatible

Set the compatible code.

[Show Error]

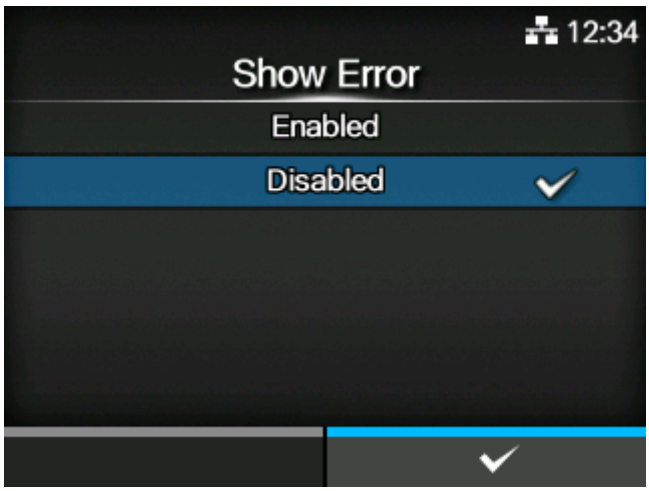

Enable or disable the command error indication when incorrect command or parameter is detected in the print data.

The options are as follows:

Enabled

The error screen is shown and the print operation is paused when an incorrect command or parameter is detected in the print data.

Disabled

The error screen is not shown, and a command error status icon appears in the status bar.

[Standard Code]

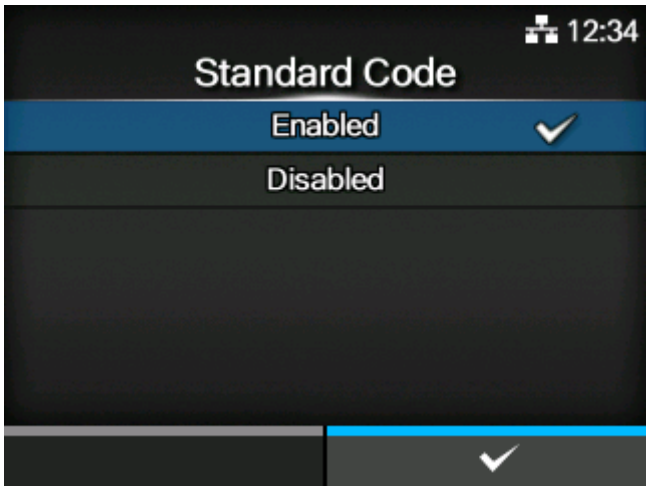

Set the protocol code.

The options are as follows:

Enabled

Use a standard code.

Disabled

Use a non-standard code.

- A message prompting you to restart the product will appear on the Online/Offline screen if you have made any changes. In such a case, reboot the product to apply the settings. When [AUTO] is selected in the [Protocol] menu while [Disabled] is selected, the setting will be changed to [Enabled].

[Orientation]

Select the layout for printing the label.

Portrait

Use a portrait layout. (No rotation)

Landscape

Use a landscape layout. (90-degree rotation)

Inv. Portrait

Use an inverse portrait layout. (180-degree rotation)

Inv. Landscape

Use an inverse landscape layout. (270-degree rotation)

[Font Settings]

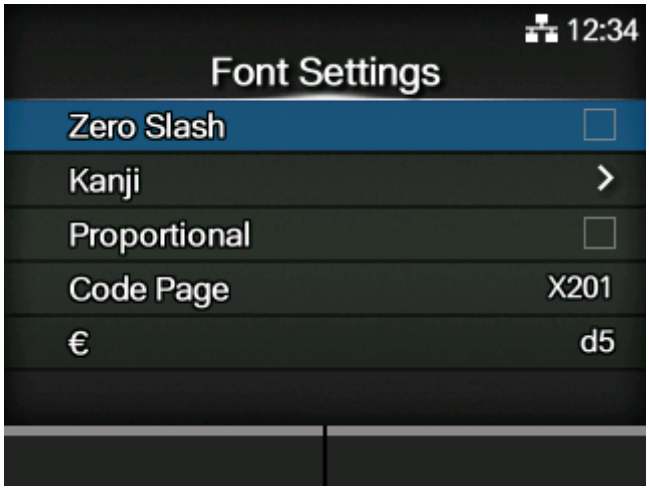

Set the font.

The setting items are as follows:

Zero Slash

Set the type for printing zero.

Kanji

Set the kanji code to be used.

Proportional

Set the character pitch for printing.

Code Page

Set the code page to be used.

€

Set the European currency symbol to the ASCII code.

[Zero Slash]

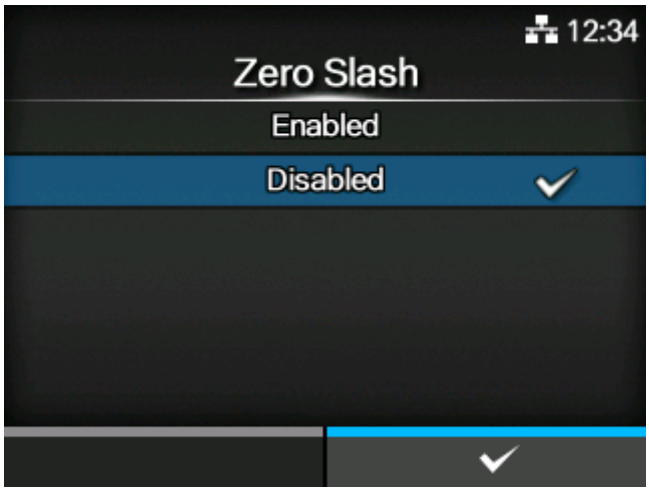

Set whether to print the number zero (0) with or without a slash (/).

This setting is applied to the following bitmap fonts:

U, S, M, WB, WL, XU, XS, XM, XL, X20, X21, X22, X23, X24

The options are as follows:

Enabled

Print zero with a slash.

Disabled

Print zero without a slash.

[Kanji]

Set the kanji code to be used.

The setting items are as follows:

Kanji Set

Set the kanji code to be used.

Character Code

Set the character code to be used.

Kanji Style

Set the character design to be used.

[Kanji Set]

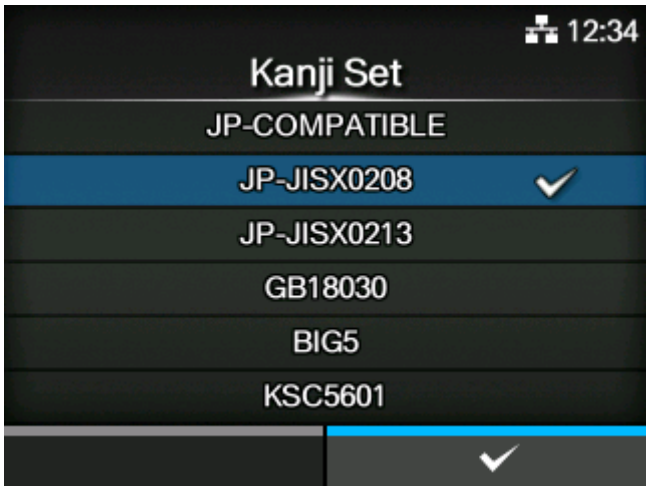

Set the kanji code to be used.

The options are as follows:

- [JP-COMPATIBLE]
- [JP-JISX0208]
- [JP-JISX0213]
- [GB18030]

- [BIG5]
- [KSC5601]

[Character Code]

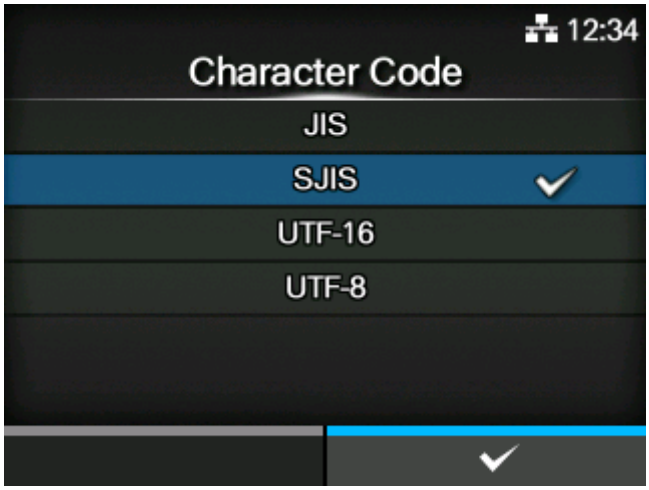

Set the character code to be used.

The options vary depending on the kanji code set in the [Kanji Set]:

- **When set to [JP-COMPATIBLE] or [JP-JISX0208]**
  - [JIS]
  - [SJIS]
  - [UTF-16]
  - [UTF-8]

- **When set to [JP-JISX0213]**
  - [SJIS]
  - [UTF-16]
  - [UTF-8]

- **When set to [GB18030]**
  - [GB18030]
  - [UTF-8]

- **When set to [BIG5]**
  - [BIG5]
  - [UTF-8]

- **When set to [KSC5601]**
  - [KSC5601]
  - [UTF-8]

[Kanji Style]

Set the character design to be used.

The options are as follows:

- [Mincho]
- [Gothic]

[Proportional]

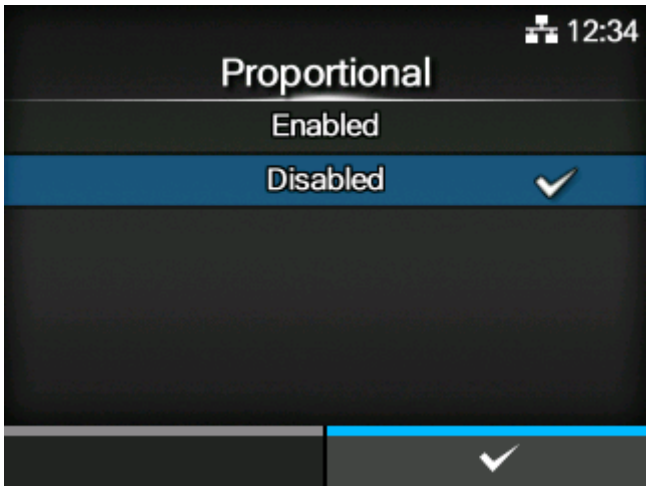

Set whether to print each character using a proportional pitch or fixed pitch.

The options are as follows:

Enabled

Print each character with a proportional pitch.

Disabled

Print all characters with a fixed pitch.

[Code Page]

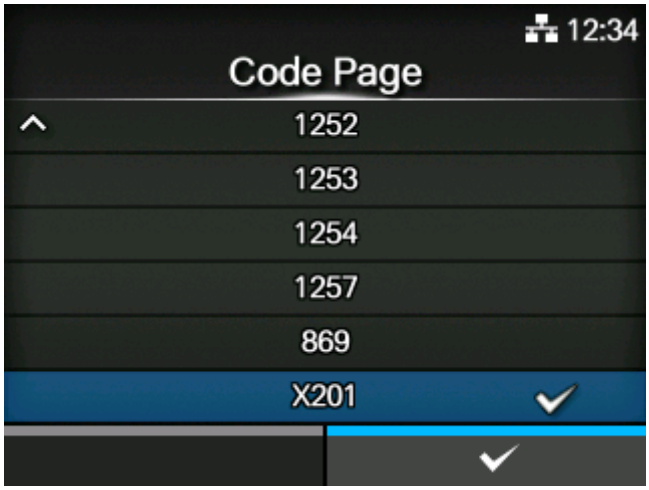

Select the code page to be used from the list.

[€]

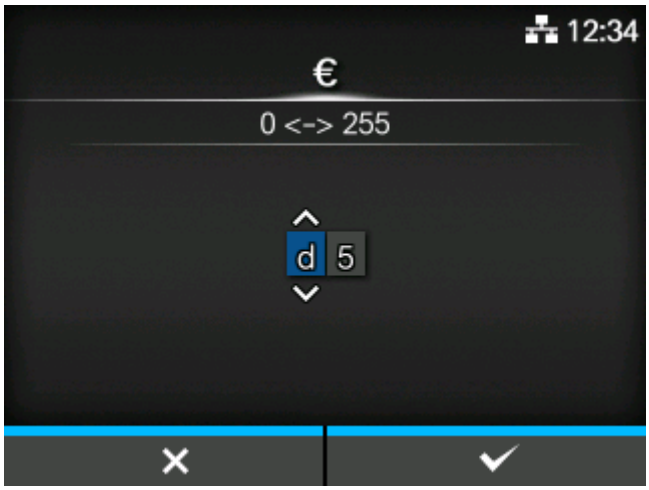

Set the European currency symbol to the ASCII code.

The setting range is from 00 to ff (hexadecimal).

[Compatible]

Set the compatible code for SBPL.

The setting items are as follows:

M-8400 Compatibility

Enable or disable the M-8400 printer compatibility function.

CODE128(C) Zero Fill

Set whether to allow odd digits and print the barcode with zero-filling when start code C is used in CODE128.

- If [M-8400 Compatibility] is set to [Enabled], this setting is automatically enabled and does not appear.

Kanji Command

Set the product behavior when the received data includes the Kanji command ESC+K5, ESC+K6 or ESC+K7.

Call Font/Logo

Set how to process the character code specified in Recall font & logo command (ESC+RF).

[M-8400 Compatibility]

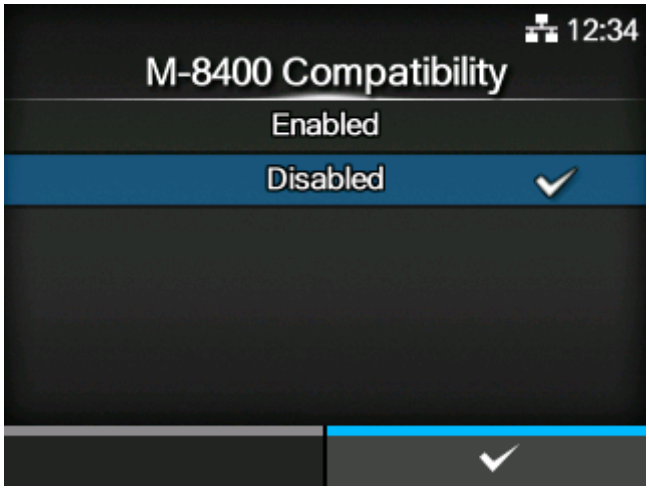

Enable or disable the M-8400 printer compatibility function.

The options are as follows:

Enabled

Enable the M-8400 printer compatibility function.

Disabled

Disable the M-8400 printer compatibility function.

- Contact your SATO sales representative for more information about the M-8400 printer compatibility function.
- If [M-8400 Compatibility] is set to [Enabled], [CODE128(C) Zero Fill] is automatically enabled and the setting item does not appear.

[CODE128(C) Zero Fill]

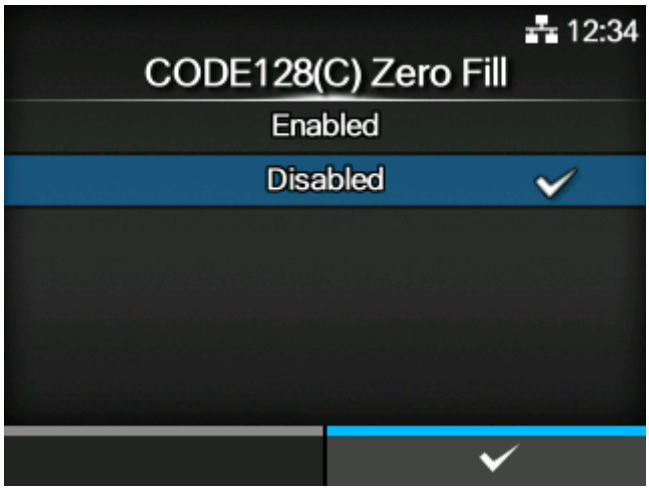

Set whether to allow odd digits and print the barcode with zero-filling at the end of the data when start code C is used in CODE128.

If [M-8400 Compatibility] is set to [Enabled], this setting is automatically enabled and does not appear.

The options are as follows:

Enabled

Allow odd digits and print the barcode with zero-filling.

Disabled

Do not allow odd digits. A command error occurs and the barcode will not be printed.

[Kanji Command]

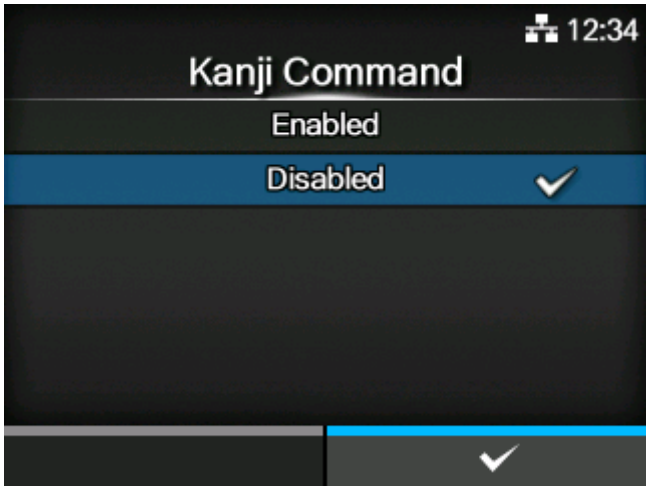

Set the product behavior when the received data includes the Kanji command ESC+K5, ESC+K6 or ESC+K7.

The options are as follows:

Enabled

Change the Kanji commands ESC+K5, ESC+K6 and ESC+K7 in the received data to the proper commands and print.

- ESC+K5: 16x16 dots Kanji in horizontal line with one-byte character
- ESC+K6: 24x24 dots Kanji in horizontal line with one-byte character
- ESC+K7: 22x22 dots Kanji in horizontal line

Disabled

Do not change the Kanji commands ESC+K5, ESC+K6 and ESC+K7 in the received data. The product behavior when it receives these commands is as follows:

- ESC+K5: Print with 40x40 dots Kanji in horizontal line.
- ESC+K6: A command error occurs and the data will not be printed.
- ESC+K7: A command error occurs and the data will not be printed.

[Call Font/Logo]

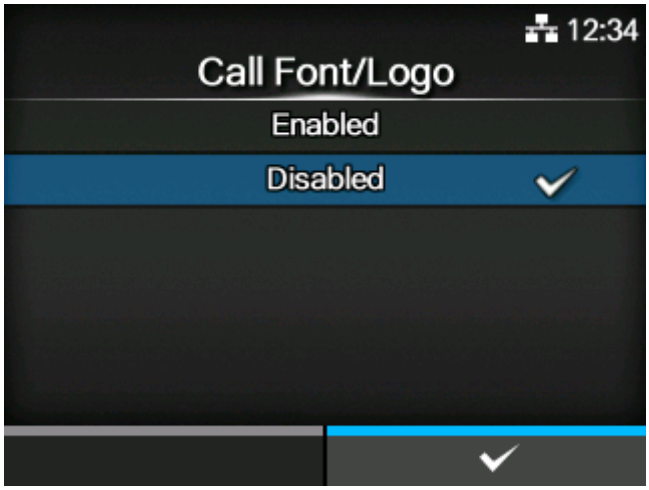

Set how to process the character code specified in Recall font & logo command (ESC+RF).

The options are as follows:

Enabled

Character codes are processed in little-endian format.

Disabled

Character codes are processed in big-endian format.

[SZPL]

To use SZPL as a printer command, set the following items:

Label

Set the print position.

Caret

Set the caret (^) code.

Delimiter

Set the delimiter (,) code.

Tilde

Set the tilde (~) code.

Clock Format

Set the date format.

Default Font

Select the default font for when printing using a multilingual font contained in the product.

[Label]

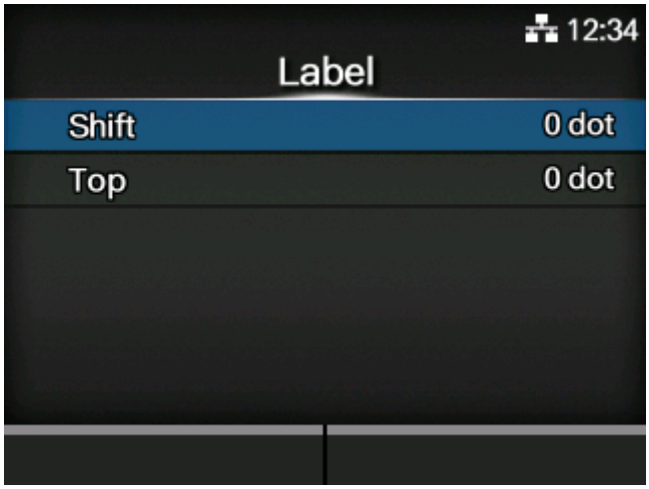

Set the print position.

The setting items are as follows:

Shift

Set the shift offset position of the label.

Top

Set the top offset position of the label.

[Shift]

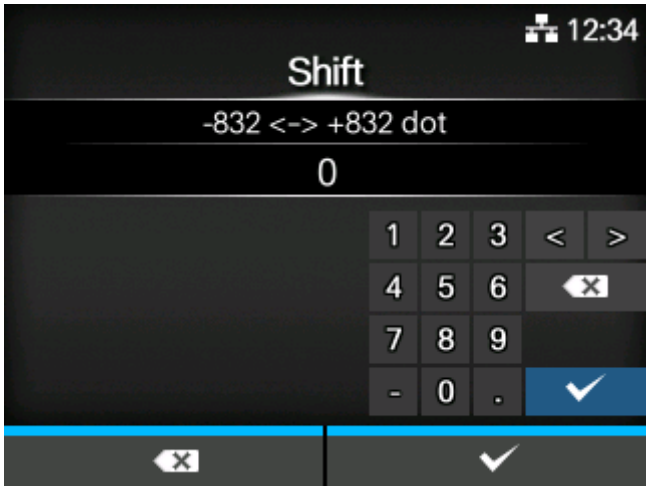

Set the shift offset position of the label.

The setting range varies depending on the print resolution of the product.

The setting range is as follows:

Resolution	Setting range
203 dpi (1 dot = 0.125 mm (0.0049"))	-832 to 0 to 832 dots
305 dpi (1 dot = 0.083 mm (0.0033"))	-1248 to 0 to 1248 dots

[Top]

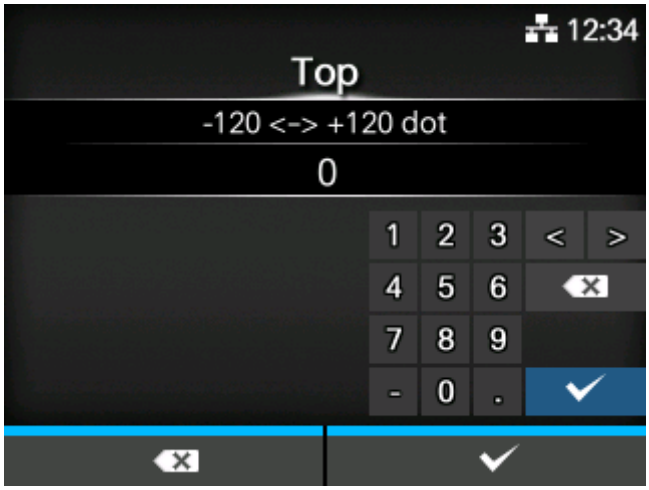

Set the top offset position of the label.

The setting range is from -120 to 0 to 120 dots.

- The length of 1 dot varies depending on the print resolution of the product.
  - 203 dpi : 1 dot = 0.125 mm (0.0049")
  - 305 dpi : 1 dot = 0.083 mm (0.0033")

[Caret]

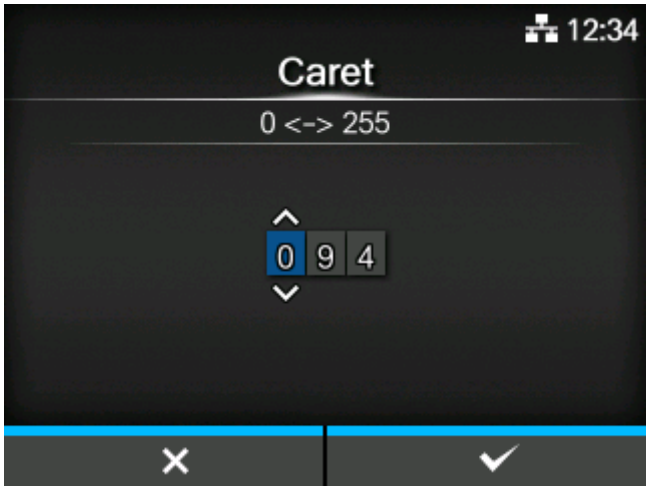

Set the caret (^) code.

The setting range is from 0 to 255.

[Delimiter]

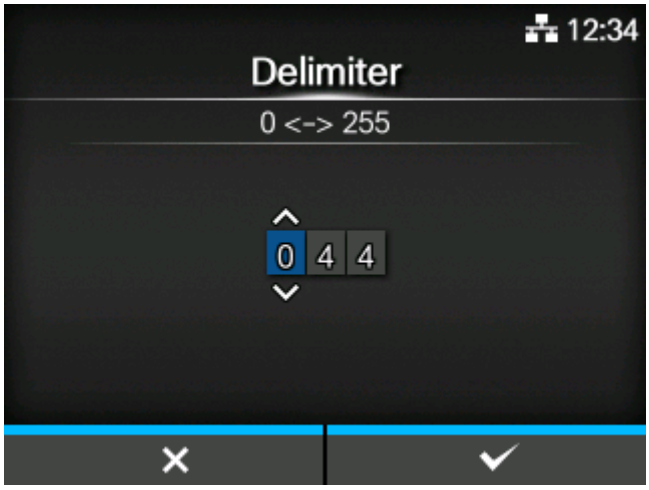

Set the delimiter (,) code.

The setting range is from 0 to 255.

[Tilde]

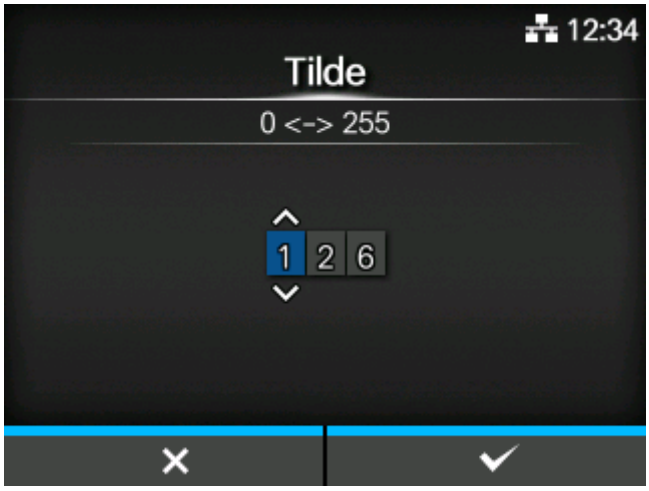

Set the tilde (~) code.

The setting range is from 0 to 255.

[Clock Format]

Set the date format.

The options are as follows (January 24, 2017, at 1:45 pm, for example):

- [(none)]
- [MM/DD/YY (24-hour clock)](Example: 01/24/17 (13:45))
- [MM/DD/YY (12-hour clock)](Example: 01/24/17 (01:45))
- [DD/MM/YY (24-hour clock)](Example: 24/01/17 (13:45))
- [DD/MM/YY (12-hour clock)](Example: 24/01/17 (01:45))

[Default Font]

Select a default font from the list for when printing using a multilingual font contained in the product.

[SIPL]

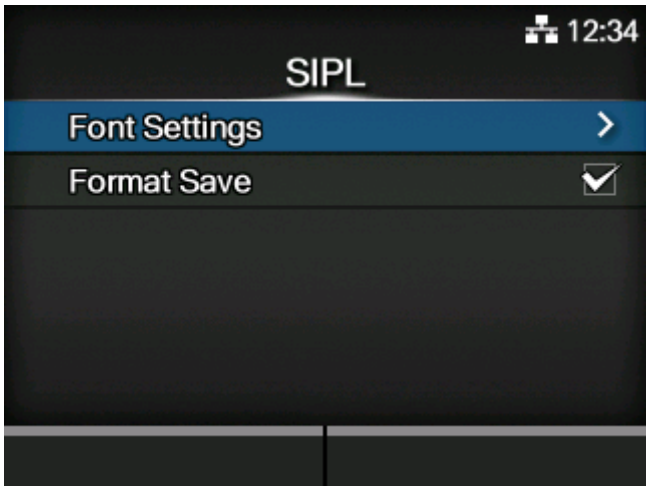

To use SIPL as a printer command, set the following items:

Font Settings

Set the font.

Format Save

Set whether to save the user format data registered at printing in the product.

[Font Settings]

Set the font.

The setting items are as follows:

Code Page

Set the code page to be used.

New Font Encoding

Enable or disable new font encoding.

c20 Proportional Pitch

Set the character pitch for printing.

Zero Slash

Set the type for printing zero.

[Code Page]

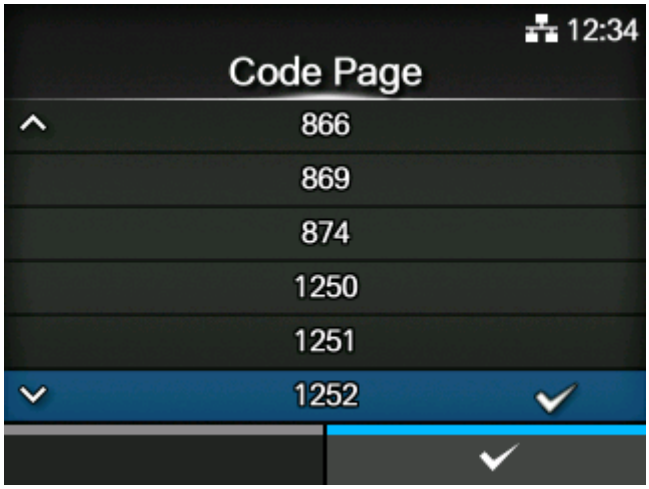

Select the code page to be used from the list.

[New Font Encoding]

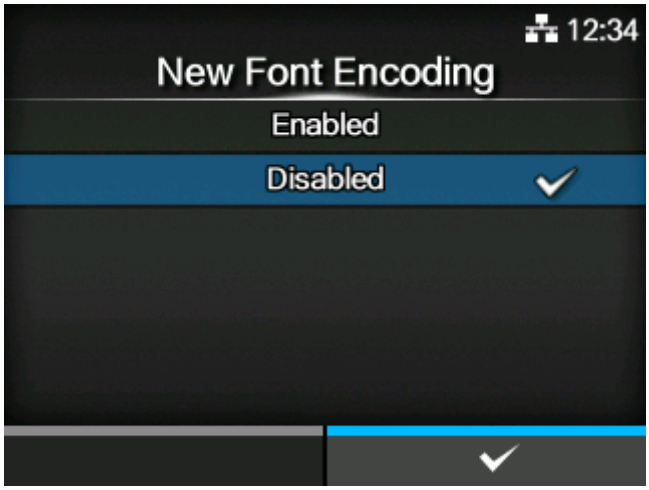

Enable or disable new font encoding.

The options are as follows:

Enabled

Enable new font encoding.

Disabled

Disable new font encoding.

- Contact your SATO sales representative for more information about the new font.

[c20 Proportional Pitch]

Set whether to print each character using a proportional pitch or fixed pitch.

The options are as follows:

Enabled

Print each character with a proportional pitch.

Disabled

Print all characters with a fixed pitch.

[Zero Slash]

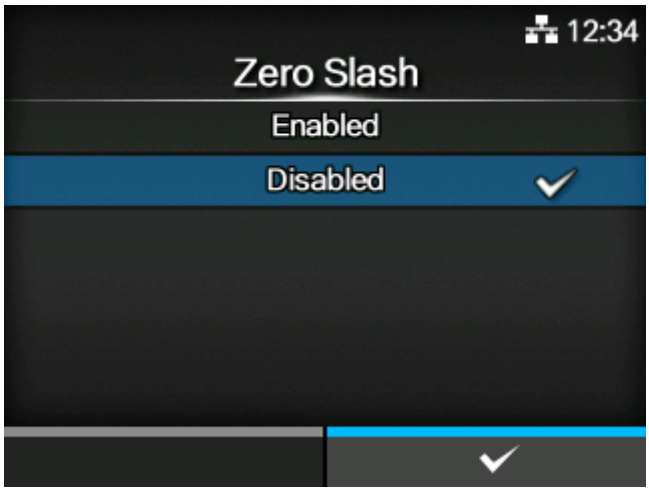

Set whether to print the number zero (0) with or without a slash (/).

The options are as follows:

Enabled

Print zero with a slash.

Disabled

Print zero without a slash.

[Format Save]

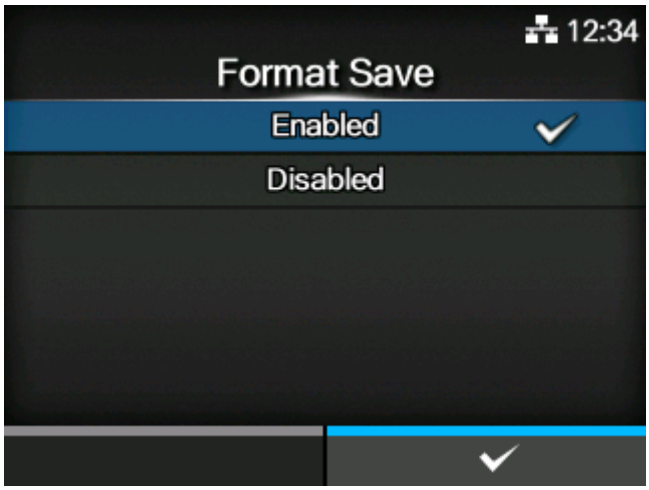

Set whether to save the user format data registered at printing in the product.

The options are as follows:

Enabled

Save the user format data registered at printing in the product.

Disabled

Do not save the user format data registered at printing in the product. The user format data remains in the product memory after printing until the product is powered off. You need to register a user format again after reboot.

[STCL]

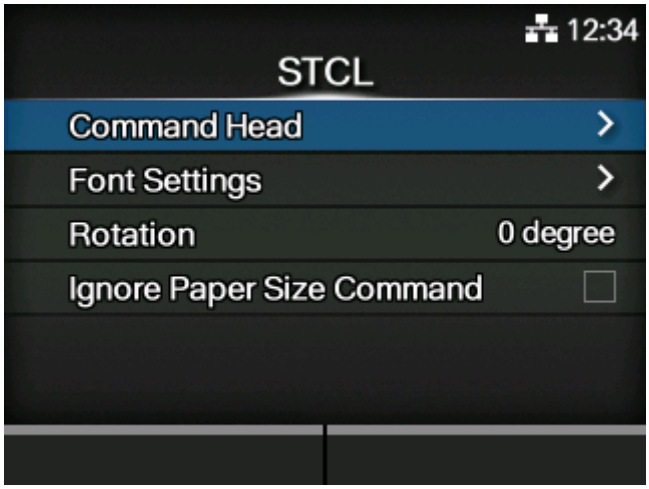

To use STCL as a printer command, set the following items:

Command Head

Set the command head.

Font Settings

Set the font.

Rotation

Set the page orientation for label printing.

Ignore Paper Size Command

Set whether to ignore a paper size command in the print data.

[Command Head]

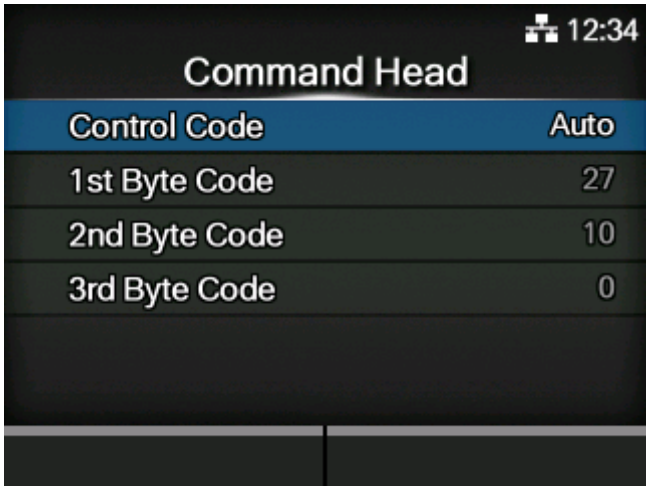

Set the command head.

The setting items are as follows:

Control Code

Set the control code.

1st Byte Code

Set the first byte code.

2nd Byte Code

Set the second byte code.

3rd Byte Code

Set the third byte code.

[Control Code]

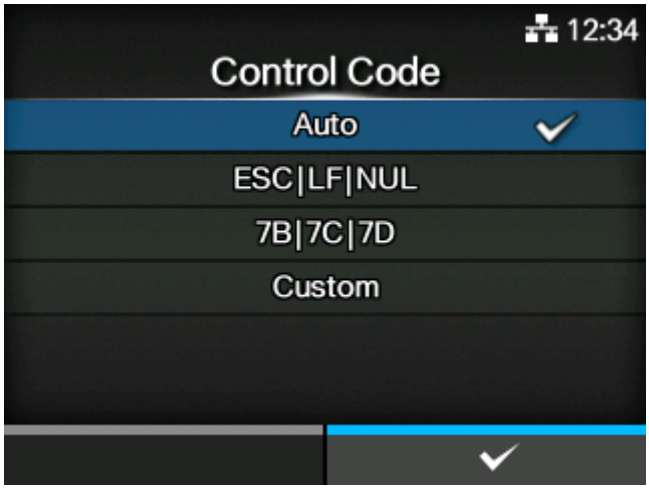

Set the control code.

The options are as follows:

Auto

Perform the protocol detection automatically.

ESC|LF|NUL

Set the control code to ESC|LF|NUL.

7B|7C|7D

Set the control code to 7B|7C|7D.

Custom

Change the first to third byte codes.

[1st Byte Code]

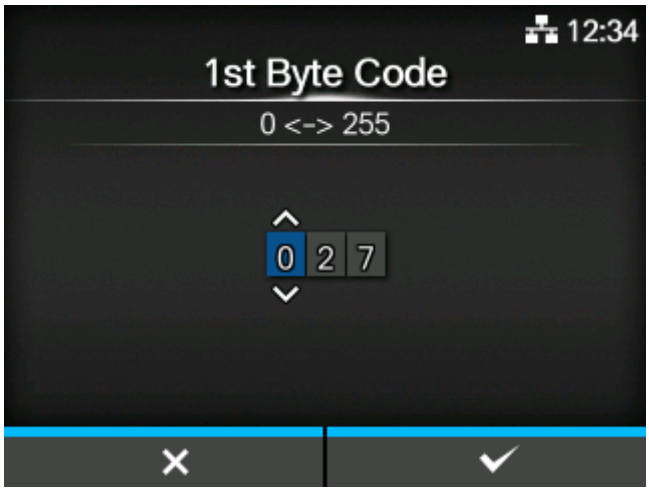

Set the first byte code.

You can change this only if you have selected [Custom] in the [Control Code] menu.

The setting range is from 0 to 255.

[2nd Byte Code]

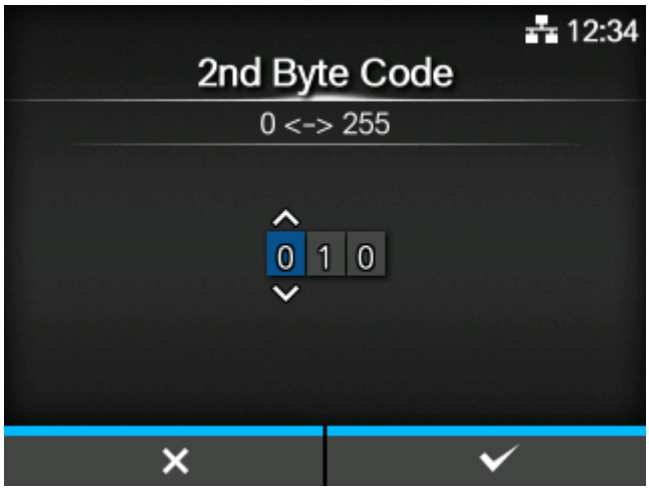

Set the second byte code.

You can change this only if you have selected [Custom] in the [Control Code] menu.

The setting range is from 0 to 255.

[3rd Byte Code]

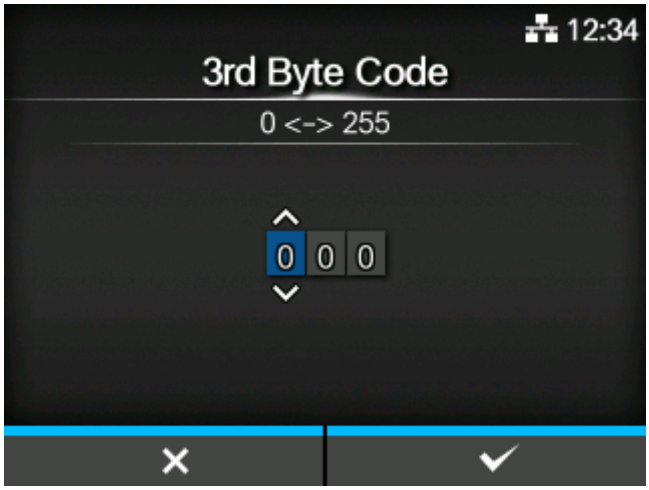

Set the third byte code.

You can change this only if you have selected [Custom] in the [Control Code] menu.

The setting range is from 0 to 255.

[Font Settings]

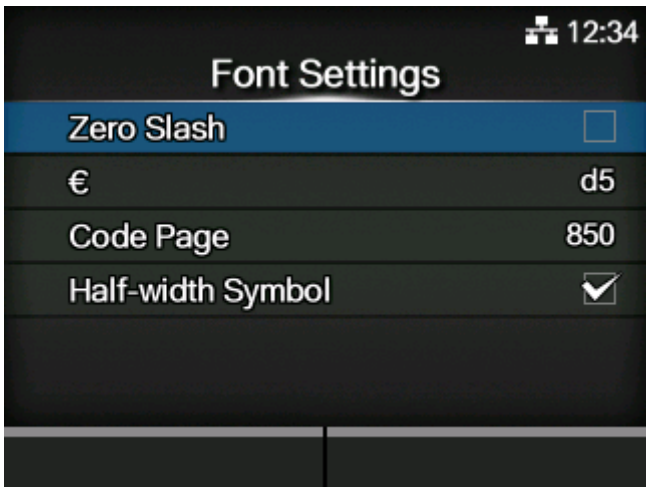

Set the font.

The setting items are as follows:

Zero Slash

Set the type for printing zero.

€

Set the European currency symbol to the ASCII code.

Code Page

Set the code page to be used.

Half-width Symbol

Set whether to print symbols with half-width characters.

[Zero Slash]

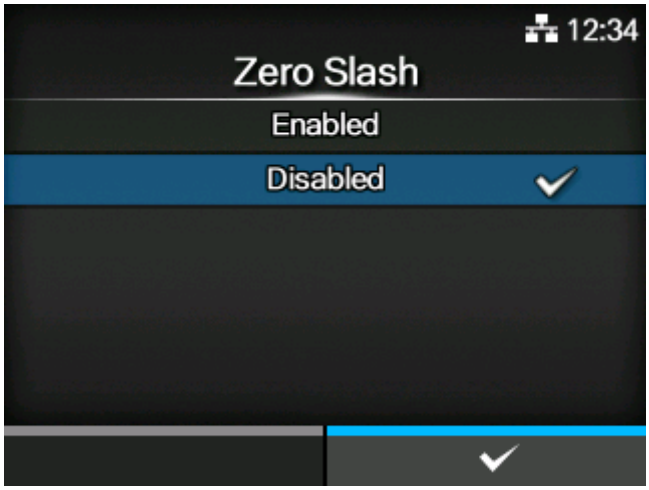

Set whether to print the number zero (0) with or without a slash (/).

The options are as follows:

Enabled

Print zero with a slash.

Disabled

Print zero without a slash.

[€]

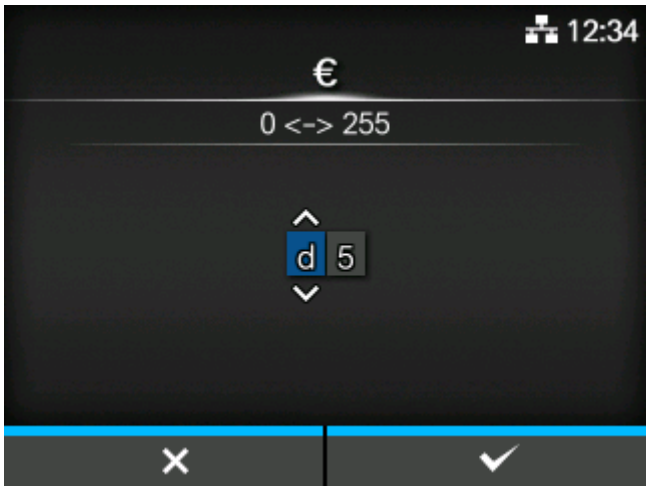

Set the European currency symbol to the ASCII code.

The setting range is from 00 to ff (hexadecimal).

[Code Page]

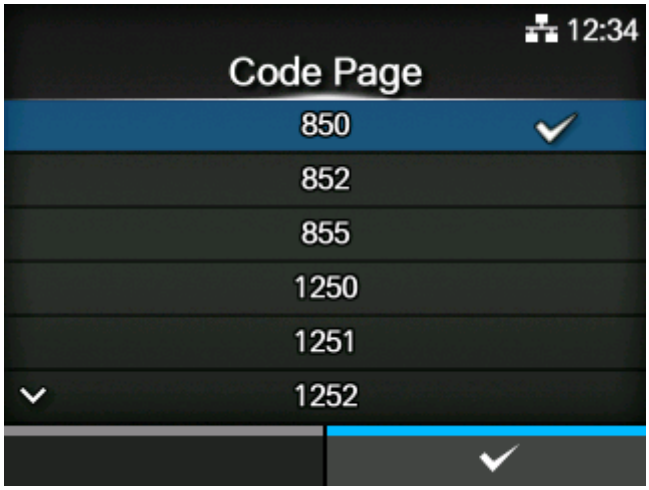

Select the code page to be used from the list.

[Half-width Symbol]

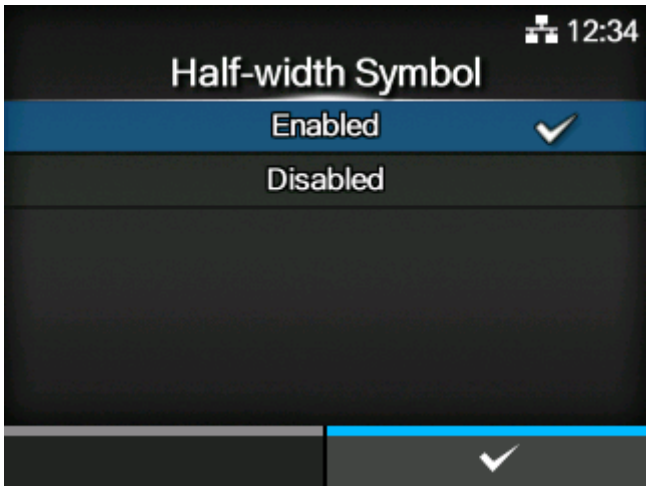

Set whether to print symbols with half-width characters.

The options are as follows:

Enabled

Print symbols with half-width characters.

Disabled

Do not print symbols with half-width characters.

[Rotation]

Set the page orientation for label printing.

The options are as follows:

0 degree

Labels are printed in portrait orientation.

90 degree

Labels are printed in landscape orientation.

[Ignore Paper Size Command]

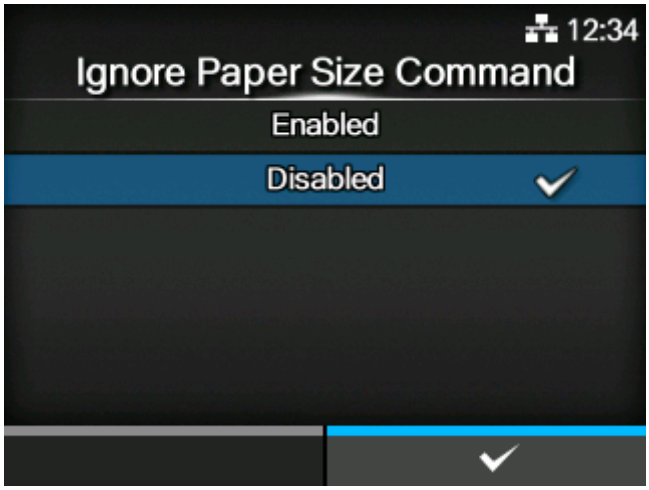

Set whether to ignore a paper size command in the print data.

The options are as follows:

Enabled

Ignore a paper size command in the print data.

Disabled

Do not ignore a paper size command in the print data.

[SDPL]

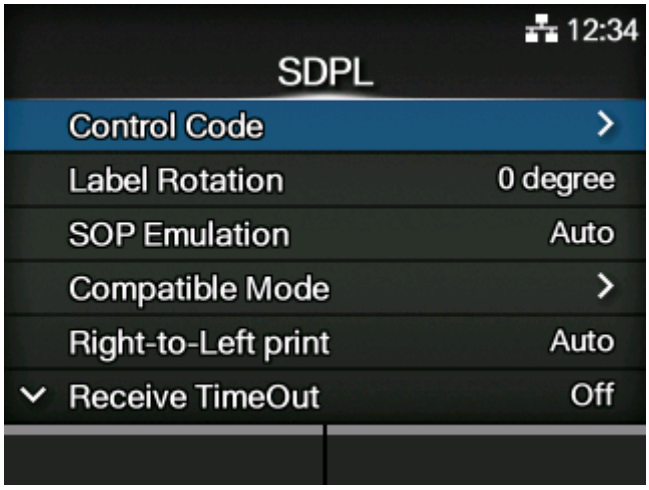

To use SDPL as a printer command, set the following items:

Control Code

Set the control code.

Label Rotation

Set the page orientation for label printing.

SOP Emulation

Set the SOP emulation.

Compatible Mode

Set the compatible mode for SDPL.

Right-to-Left print

Set the Right-to-Left printing function.

Receive TimeOut

Set a period of time the product stays in binary data receiving mode.

Blank Item Feed

Set whether to feed a label with nothing printed on it when the product receives label formatting commands that do not generate any printable image.

Prioritize

Select the settings to be prioritized for the SDPL command.

Format Attribute

Set the format attribute.

Pause Mode

Enable or disable the pause mode.

1 Byte Codepage

Select the code page to be used for one-byte characters.

SDPL Measure Unit

Set the measurement unit.

Scalable Font Style

Set the style of the scalable fonts.

Feedback Character

Enable or disable the <STX>a command.

SOH Commands

Set the SOH commands.

- [Format Attribute], [Pause Mode], [1 Byte Codepage], [SDPL Measure Unit], [Scalable Font Style], [Feedback Character] and [SOH Commands] are available only if [Settings] is selected for the corresponding setting item under the [Prioritize] menu.

[Control Code]

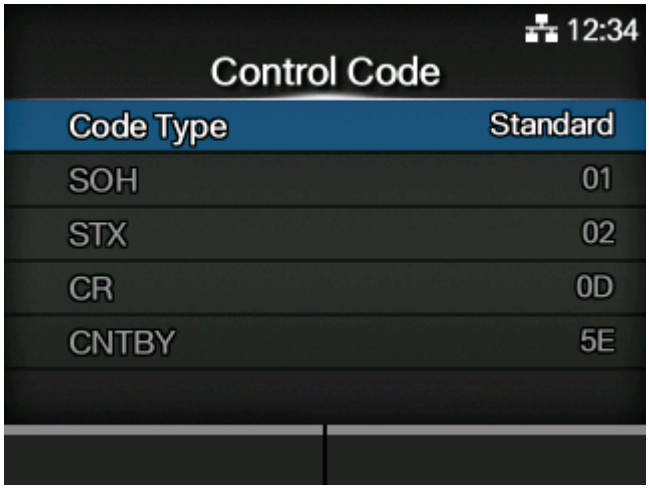

Set the control code.

The setting items are as follows:

Code Type

Set the type of the control code.

SOH

Set the SOH code.

STX

Set the STX code.

CR

Set the CR code.

CNTBY

Set the CNTBY code.

[Code Type]

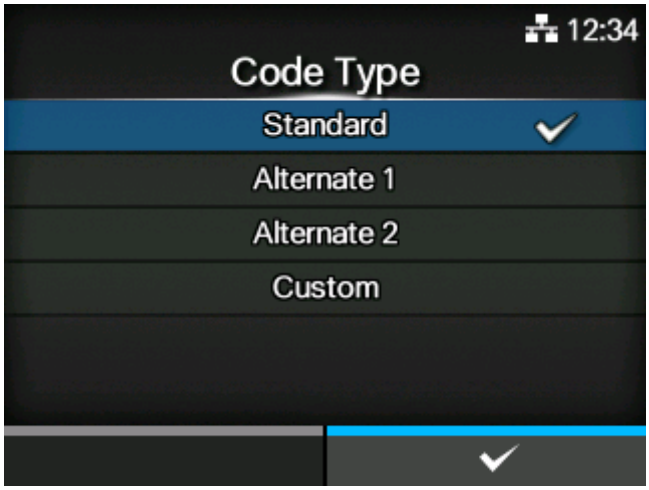

Set the type of the control code.

The options are as follows:

- [Standard]
- [Alternate 1]
- [Alternate 2]
- [Custom]

[SOH]

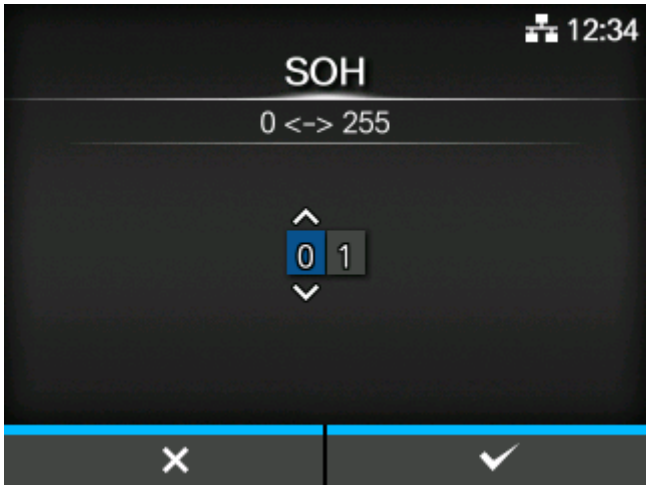

Set the SOH code.

You can change this setting if you have selected [Custom] in the [Code Type] menu.

The setting range is from 00 to ff (hexadecimal).

[STX]

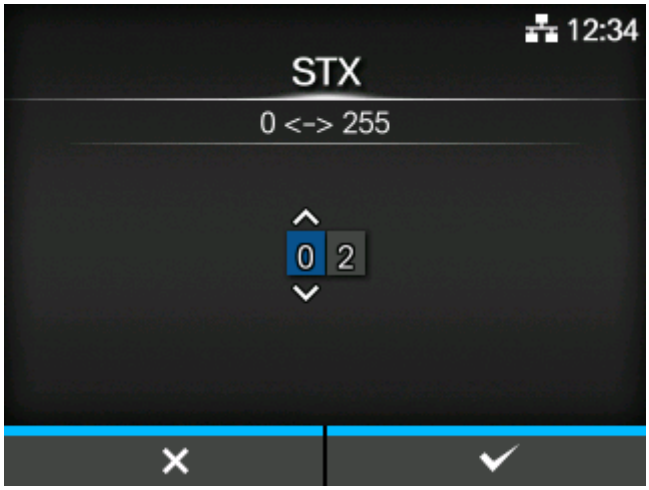

Set the STX code.

You can change this setting if you have selected [Custom] in the [Code Type] menu.

The setting range is from 00 to ff (hexadecimal).

[CR]

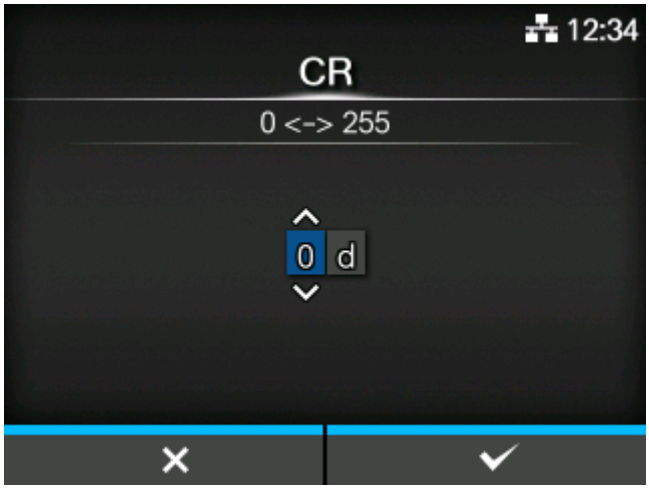

Set the CR code.

You can change this setting if you have selected [Custom] in the [Code Type] menu.

The setting range is from 00 to ff (hexadecimal).

[CNTBY]

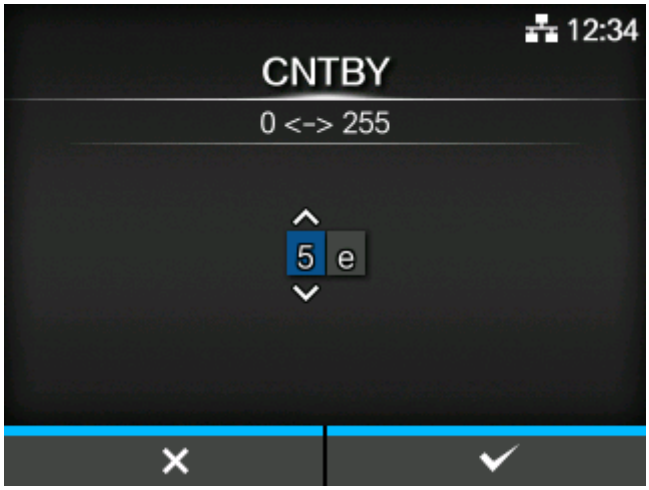

Set the CNTBY code.

You can change this setting if you have selected [Custom] in the [Code Type] menu.

The setting range is from 00 to ff (hexadecimal).

[Label Rotation]

Set the page orientation for label printing.

The label size set in the product is used as a reference of rotation.

The options are as follows:

0 degree

Labels are printed in portrait orientation.

90 degree

Labels are printed in landscape orientation.

180 degree

Labels are printed in inverse-portrait orientation.

270 degree

Labels are printed in inverse-landscape orientation.

[SOP Emulation]

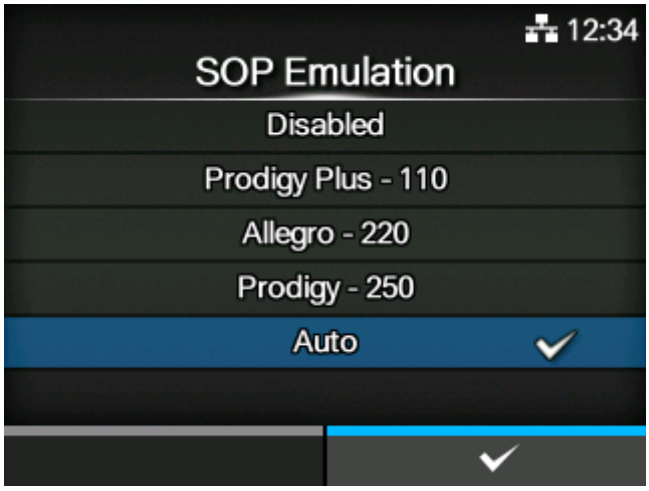

Set the SOP emulation.

The options are as follows:

- [Disabled]
- [Prodigy Plus - 110]
- [Allegro - 220]
- [Prodigy - 250]
- [Auto]

[Compatible Mode]

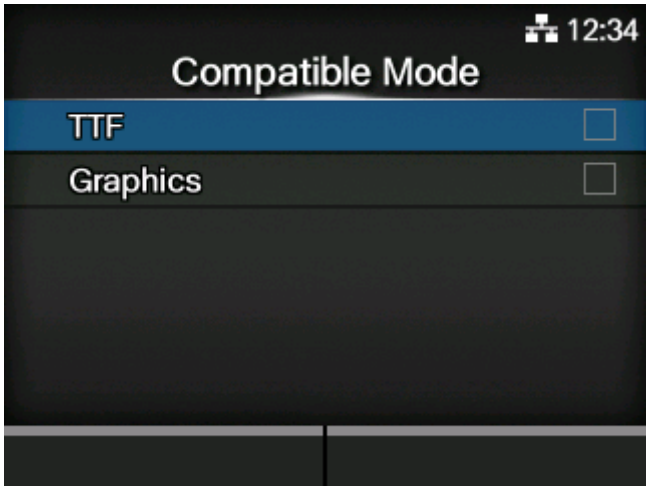

Set the compatible mode for SDPL.

The setting items are as follows:

TTF

Enable or disable TrueType font compatible mode.

Graphics

Set whether to allow the registration of graphic data even if a line feed code is omitted.

[TTF]

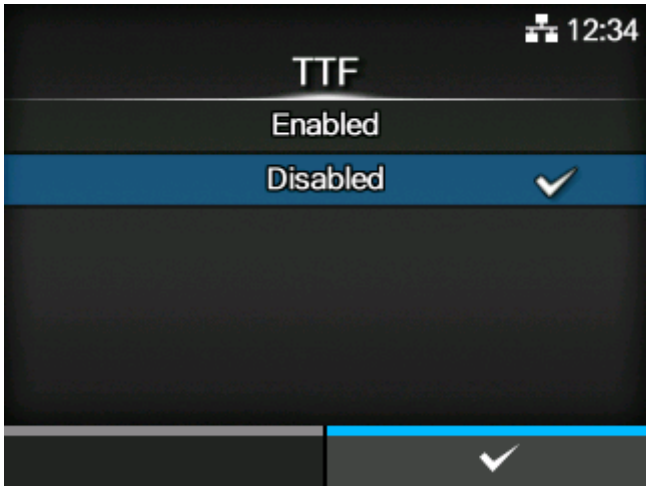

Enable or disable TrueType font compatible mode.

The options are as follows:

Enabled

Enable TrueType font compatible mode. The bold TrueType fonts are printed in smaller pitch.

Disabled

Disable TrueType font compatible mode.

[Graphics]

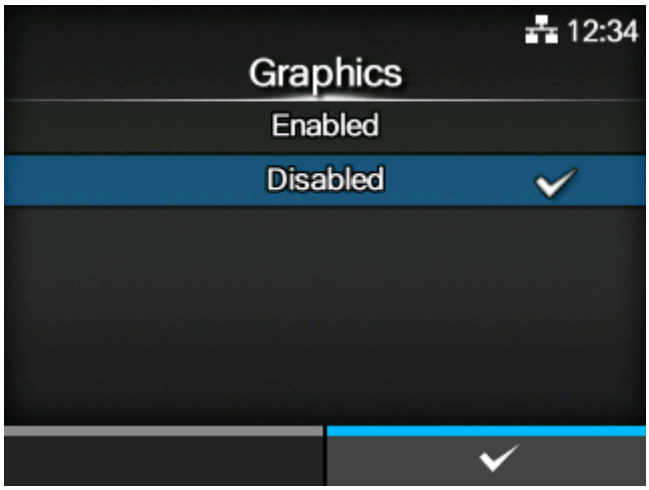

Set whether to allow the registration of graphic data even if a line feed code is omitted.

The options are as follows:

Enabled

Allow the registration of graphic data even when a line feed code is omitted.

Disabled

Do not allow the registration of graphic data when a line feed code is omitted.

[Right-to-Left print]

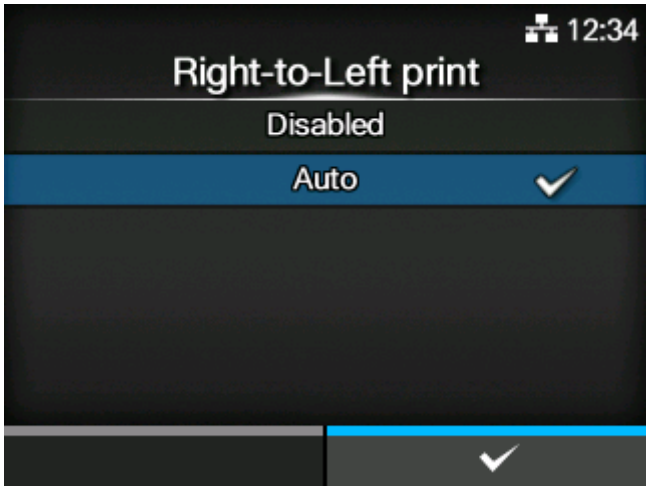

Set the Right-to-Left printing function.

The options are as follows:

Disabled

All texts are printed from left to right.

Auto

When an Arabic font is detected, the Arabic text is printed from right to left.

[Receive TimeOut]

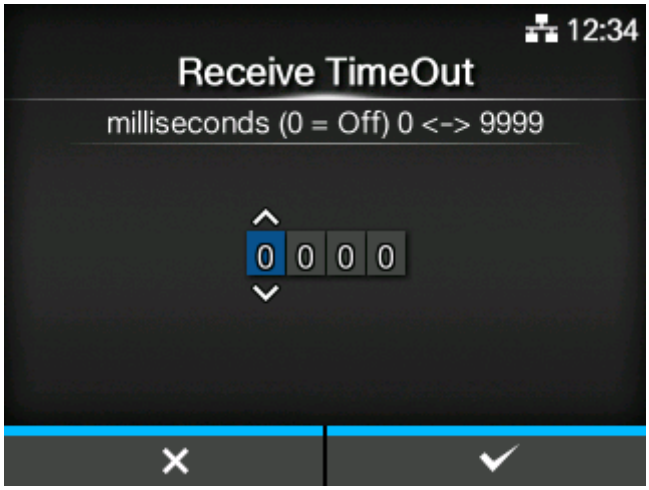

Set a period of time the product stays in binary data receiving mode.

When the specified period of type passes, the product exits from binary receiving mode and scans for SDPL commands.

The setting range is from 0 (off) to 9999 ms.

[Blank Item Feed]

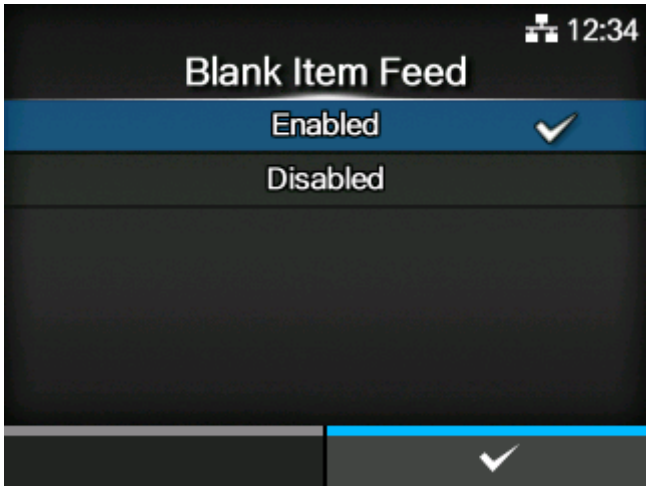

Set whether to feed a label with nothing printed on it when the product receives label formatting commands that do not generate any printable image.

The options are as follows:

Enabled

Feeds a label with nothing printed on it.

Disabled

Does not feed a label with nothing printed on it.

[Prioritize]

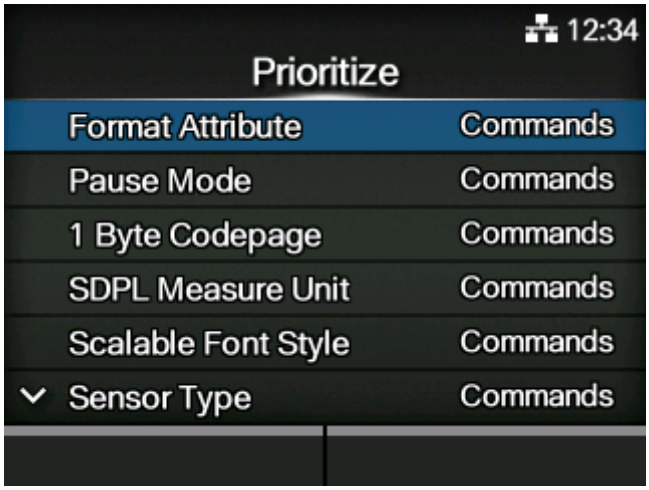

Select the settings to be prioritized for each setting item of the SDPL command. You can set whether to prioritize settings through the product or through commands.

When you select [Settings] for an item, the setting specified in the [SDPL] menu of the product will be used.

The setting items are as follows:

Format Attribute

Select the setting to be prioritized for the format attribute.

Pause Mode

Select the setting to be prioritized for pause mode.

1 Byte Codepage

Select the setting to be prioritized for the 1 byte code page.

SDPL Measure Unit

Select the setting to be prioritized for the measurement unit.

Scalable Font Style

Select the setting to be prioritized for the scalable font style.

Sensor Type

Select the setting to be prioritized for the sensor type.

Feedback Character

Select the setting to be prioritized for the feedback character.

SOH Commands

Select the setting to be prioritized for the SOH commands.

Darkness

Factory Offset

Speed

The option selected in the [Printing] > [Advanced] > [Prioritize] menu is applied to these three settings and shown on this screen.

[Format Attribute]

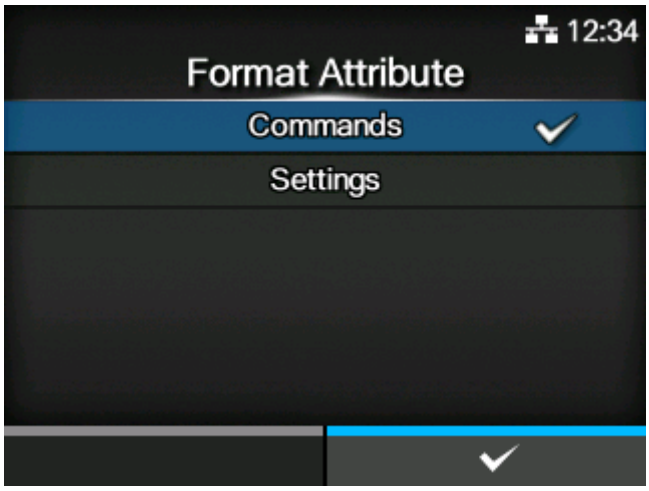

Set whether to prioritize the settings through the product or through commands for the format attribute setting.

The options are as follows:

Commands

Prioritize the settings through commands.

Settings

Prioritize the settings that are done through the product.

[Pause Mode]

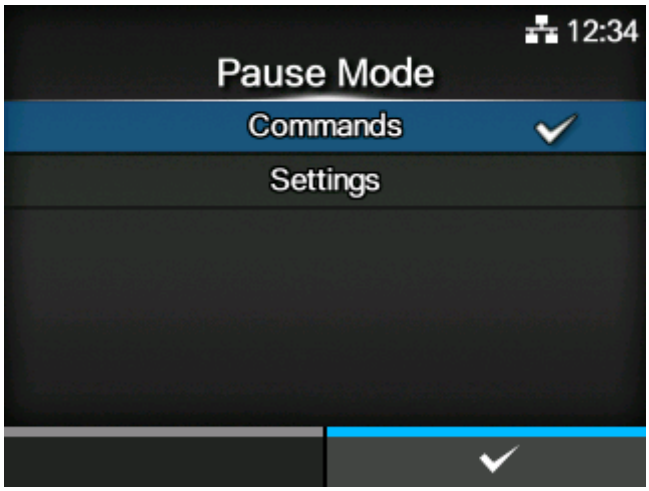

Set whether to prioritize the settings through the product or through commands for the pause mode setting.

The options are as follows:

Commands

Prioritize the settings through commands.

Settings

Prioritize the settings that are done through the product.

[1 Byte Codepage]

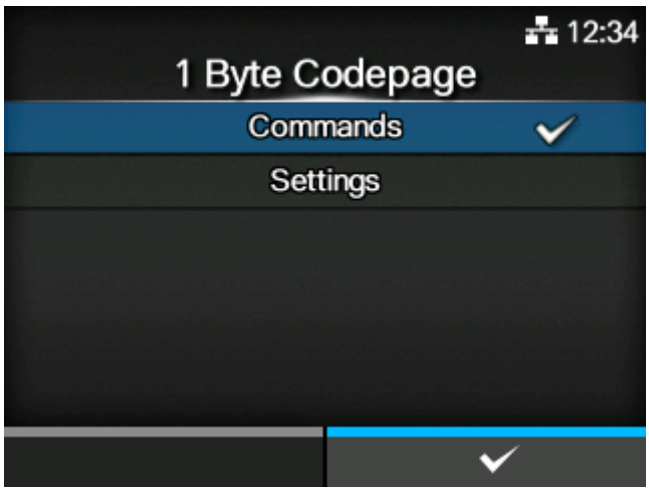

Set whether to prioritize the settings through the product or through commands for the 1 byte code page setting.

The options are as follows:

Commands

Prioritize the settings through commands.

Settings

Prioritize the settings that are done through the product.

[SDPL Measure Unit]

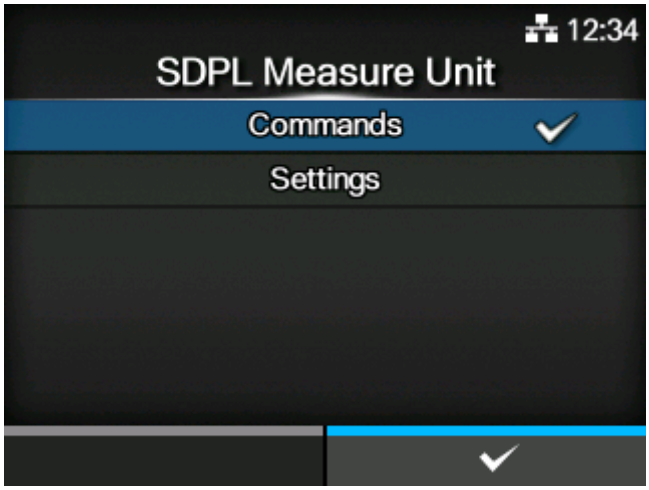

Set whether to prioritize the settings through the product or through commands for the measurement unit setting.

The options are as follows:

Commands

Prioritize the settings through commands.

Settings

Prioritize the settings that are done through the product.

[Scalable Font Style]

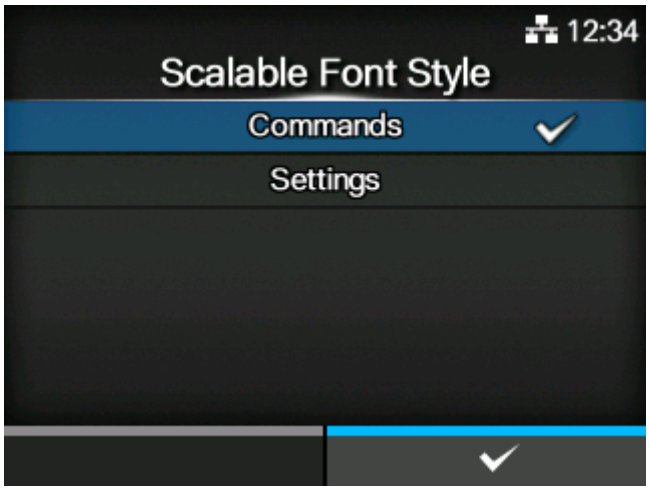

Set whether to prioritize the settings through the product or through commands for the scalable font style settings.

The options are as follows:

Commands

Prioritize the settings through commands.

Settings

Prioritize the settings that are done through the product.

[Sensor Type]

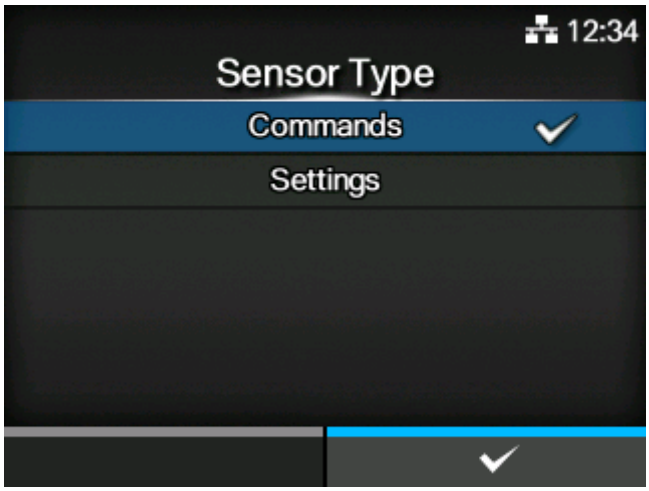

Set whether to prioritize the settings through the product or through commands for the sensor type setting.

The options are as follows:

Commands

Prioritize the settings through commands.

Settings

Prioritize the settings that are done through the product.

[Feedback Character]

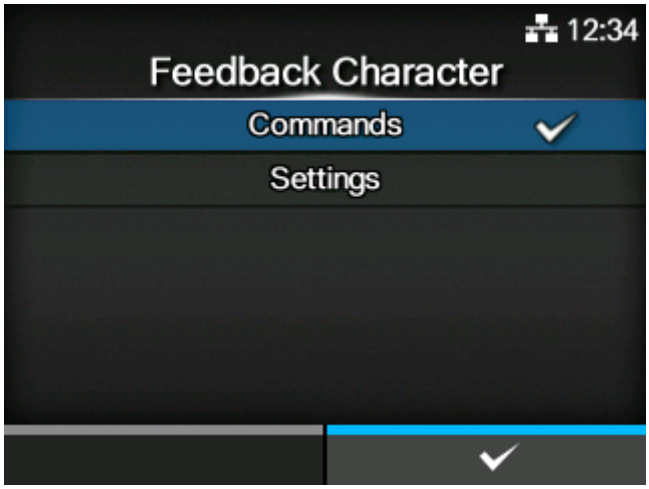

Set whether to prioritize the settings through the product or through commands for the feedback character setting.

The options are as follows:

Commands

Prioritize the settings through commands.

Settings

Prioritize the settings that are done through the product.

[SOH Commands]

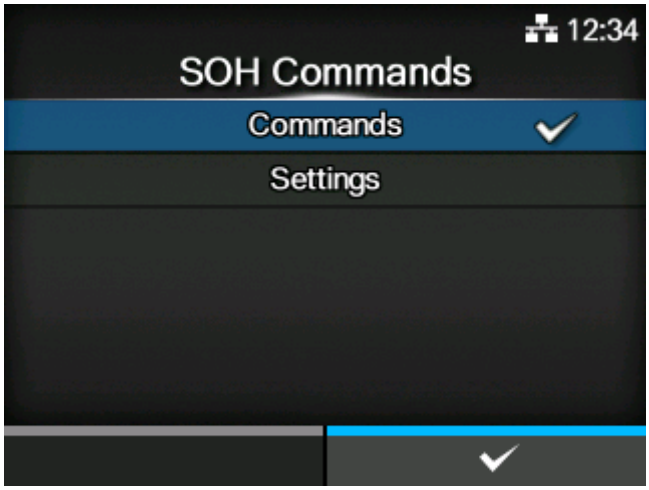

Set whether to prioritize the settings through the product or through commands for the SOH Commands settings.

The options are as follows:

Commands

Prioritize the settings through commands.

Settings

Prioritize the settings that are done through the product.

[Format Attribute]

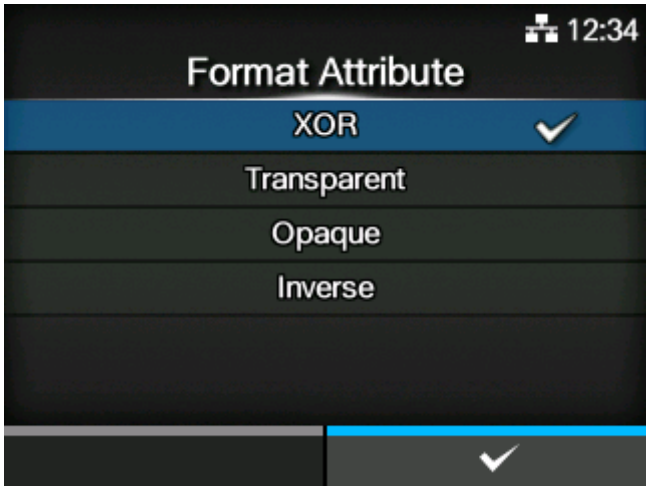

Set the format attribute.

You can change this setting if you have selected [Settings] in the [Prioritize] > [Format Attribute] menu.

The options are as follows:

- [XOR]
- [Transparent]
- [Opaque]
- [Inverse]

[Pause Mode]

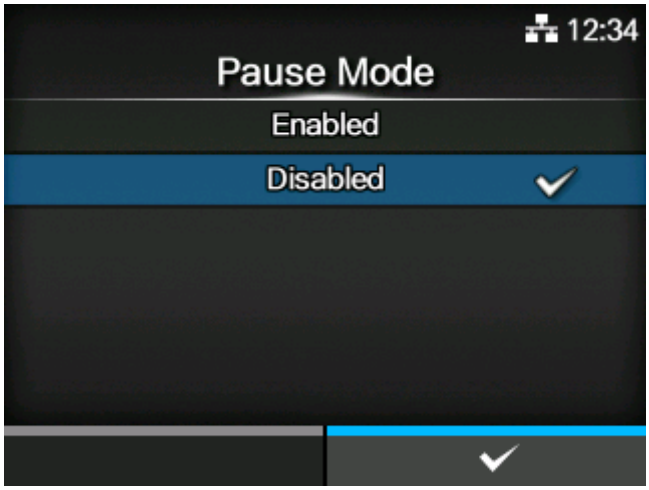

Enable or disable the pause mode.

You can change this setting if you have selected [Settings] in the [Prioritize] > [Pause Mode] menu.

The options are as follows:

Enabled

Enable the pause mode.

Disabled

Disable the pause mode.

[1 Byte Codepage]

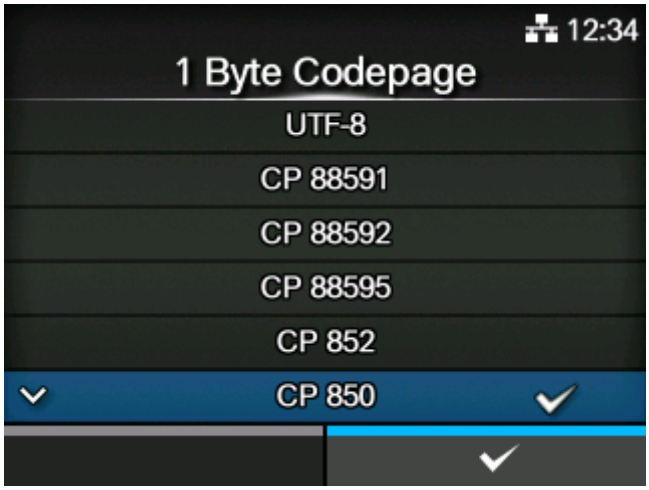

Select the code page to be used for one-byte characters from the list.

You can change this setting if you have selected [Settings] in the [Prioritize] > [1 Byte Codepage] menu.

[SDPL Measure Unit]

Set the measurement unit.

You can change this setting if you have selected [Settings] in the [Prioritize] > [SDPL Measure Unit] menu.

The options are as follows:

- [Inch]
- [Millimeter]

[Scalable Font Style]

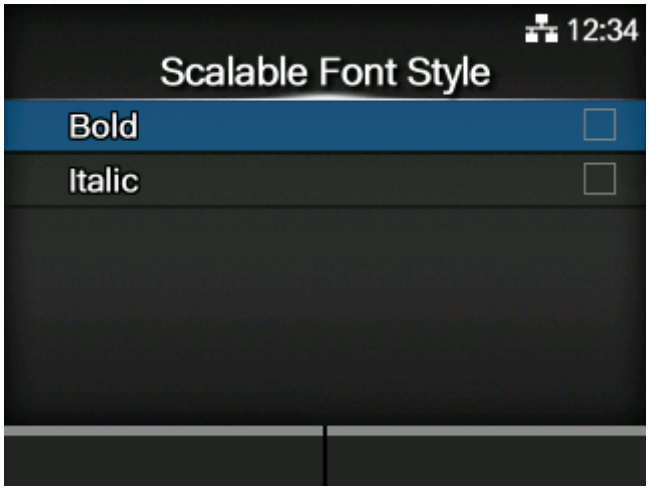

Set the style of the scalable fonts.

You can change this setting if you have selected [Settings] in the [Prioritize] > [Scalable Font Style] menu.

The setting items are as follows:

Bold

Set whether to use bold.

Italic

Set whether to use italics.

[Bold]

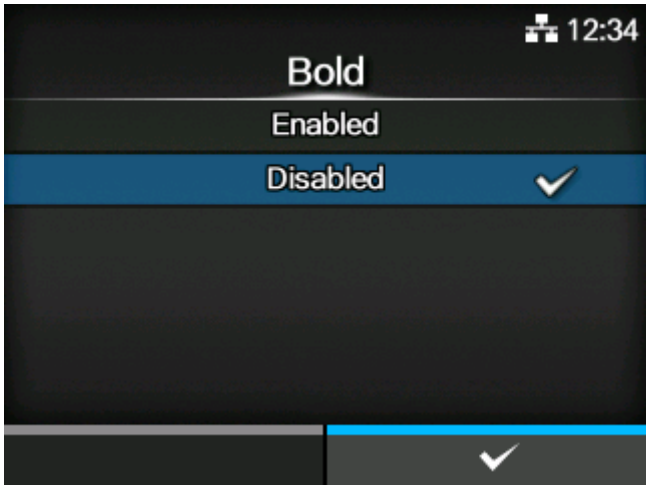

Set whether to use bold for the scalable fonts.

The options are as follows:

Enabled

Use bold.

Disabled

Do not use bold.

[Italic]

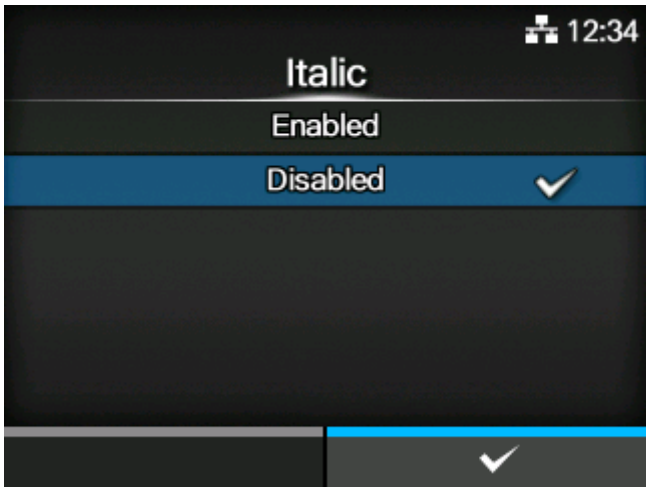

Set whether to use italics for the scalable fonts.

The options are as follows:

Enabled

Use italics.

Disabled

Do not use italics.

[Feedback Character]

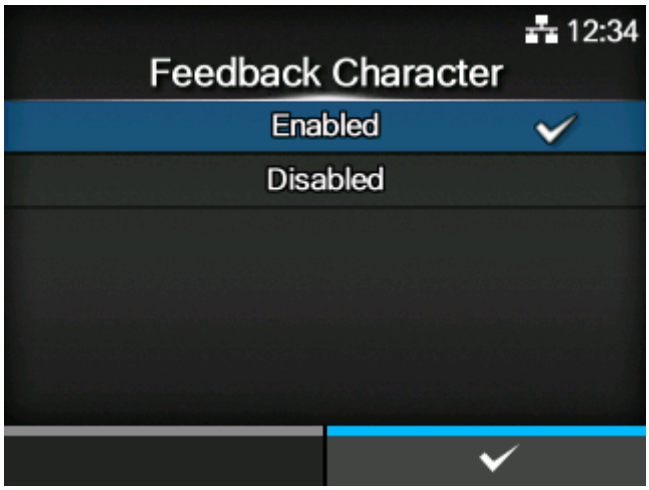

Enable or disable the <STX>a command.

You can change this setting only if you have selected [Settings] in the [Prioritize] > [Feedback Character] menu.

The options are as follows:

Enabled

Enable the <STX>a command.

Disabled

Disable the <STX>a command.

[SOH Commands]

Set the SOH commands.

You can change this setting only if you have selected [Settings] in the [Prioritize] > [SOH Commands] menu.

The setting items are as follows:

All Commands

Enable or disable all the SOH commands. You can also select to set each command individually.

SOH-B Command

Enable or disable the SOH-B command.

- Available only if you have selected [Custom] in the [All Commands] menu.

SOH-C Command

Enable or disable the SOH-C command.

- Available only if you have selected [Custom] in the [All Commands] menu.

Others

Enable or disable the SOH commands other than the SOH-B and SOH-C commands.

- Available only if you have selected [Custom] in the [All Commands] menu.

[All Commands]

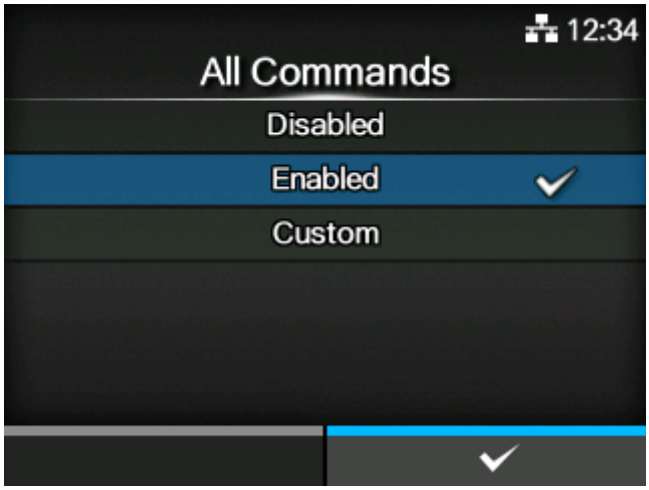

Enable or disable all the SOH commands. You can also select to set each command individually.

The options are as follows:

Disabled

Disable all the SOH commands.

Enabled

Enable all the SOH commands.

Custom

Enable or disable each type of the SOH commands individually.

[SOH-B Command]

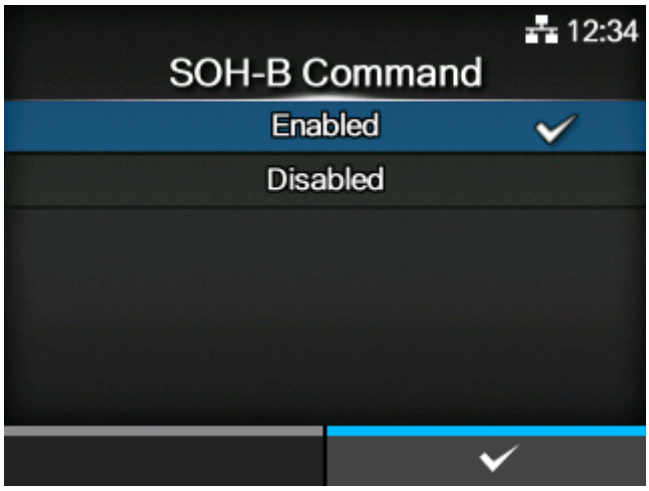

Enable or disable the SOH-B command.

Available only if you have selected [Custom] in the [All Commands] menu.

The options are as follows:

Enabled

Enable the SOH-B command.

Disabled

Disable the SOH-B command.

[SOH-C Command]

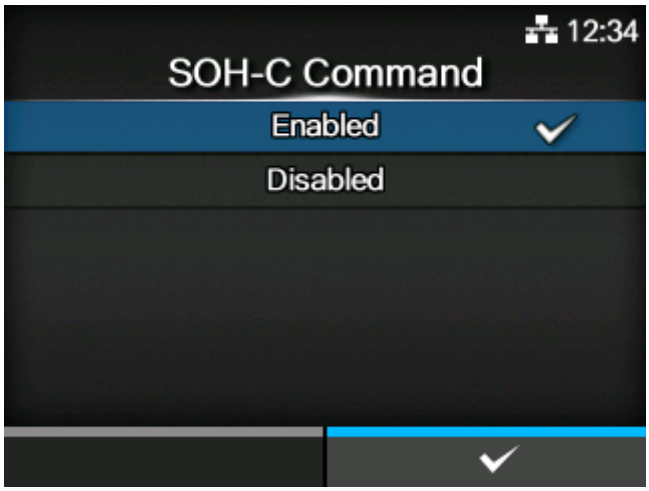

Enable or disable the SOH-C command.

Available only if you have selected [Custom] in the [All Commands] menu.

The options are as follows:

Enabled

Enable the SOH-C command.

Disabled

Disable the SOH-C command.

[Others]

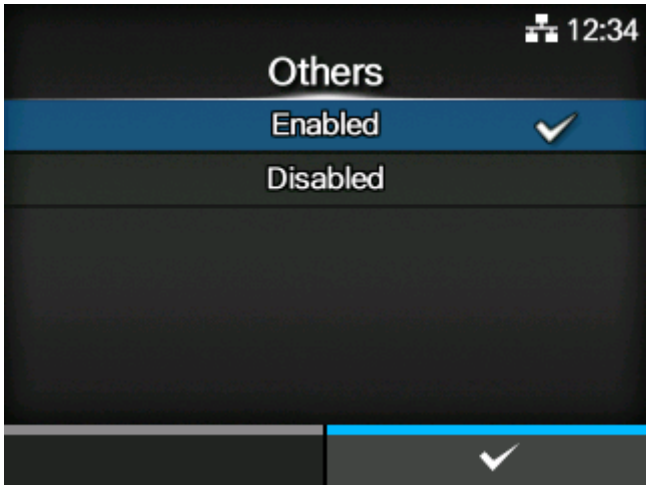

Enable or disable the SOH commands other than the SOH-B and SOH-C commands.

Available only if you have selected [Custom] in the [All Commands] menu.

The options are as follows:

Enabled

Enable the SOH commands other than the SOH-B and SOH-C commands.

Disabled

Disable the SOH commands other than the SOH-B and SOH-C commands.

[SEPL]

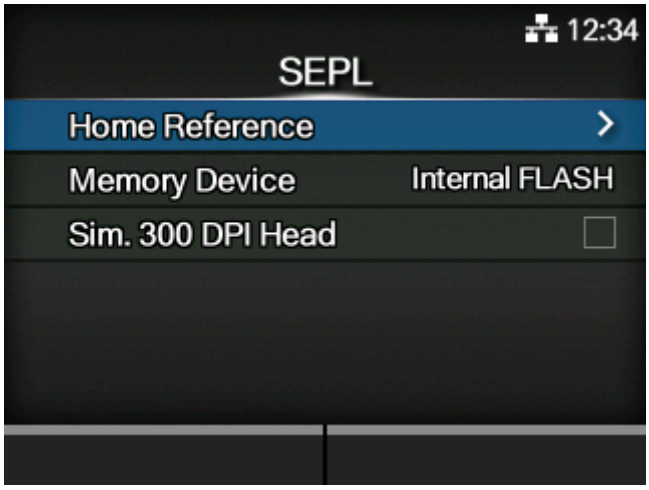

To use SEPL as a printer command, set the following items:

Home Reference

Adjust the print reference position by specifying the offset position in the horizontal and vertical directions.

Memory Device

Select the product's memory space in which to store forms, graphics and fonts.

Sim. 300 DPI Head

When you are using the product with 305 dpi resolution, enable or disable 300 dpi simulation mode.

[Home Reference]

Adjust the print reference position by specifying the offset position in the horizontal and vertical directions.

The setting items are as follows:

Horz. Offset

Specify the offset position in the horizontal direction.

Vert. Offset

Specify the offset position in the vertical direction.

[Horz. Offset]

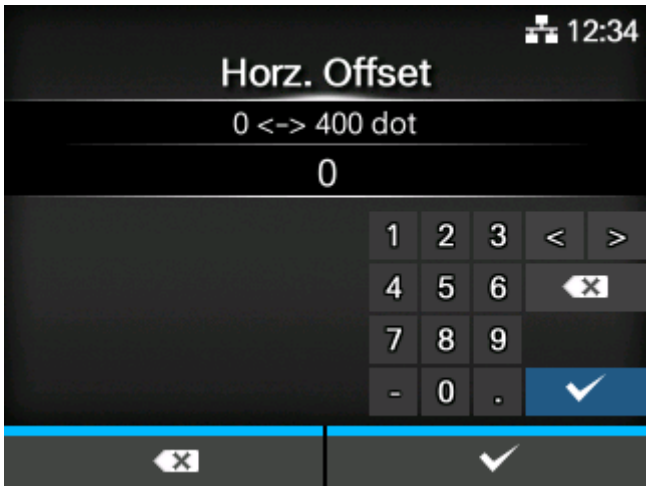

Specify the offset position in the horizontal direction.

The setting range is from 0 to 400 dots.

- The length of 1 dot varies depending on the print resolution of the product.
  - 203 dpi : 1 dot = 0.125 mm (0.0049")
  - 305 dpi : 1 dot = 0.083 mm (0.0033")

[Vert. Offset]

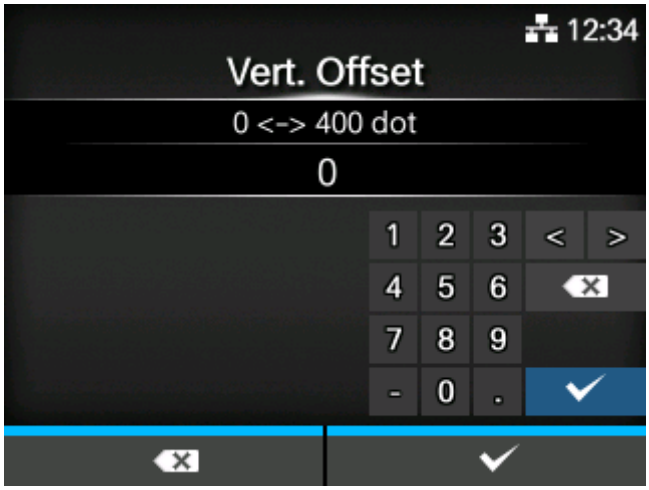

Specify the offset position in the vertical direction.

The setting range is from 0 to 400 dots.

- The length of 1 dot varies depending on the print resolution of the product.
  - 203 dpi : 1 dot = 0.125 mm (0.0049")
  - 305 dpi : 1 dot = 0.083 mm (0.0033")

[Memory Device]

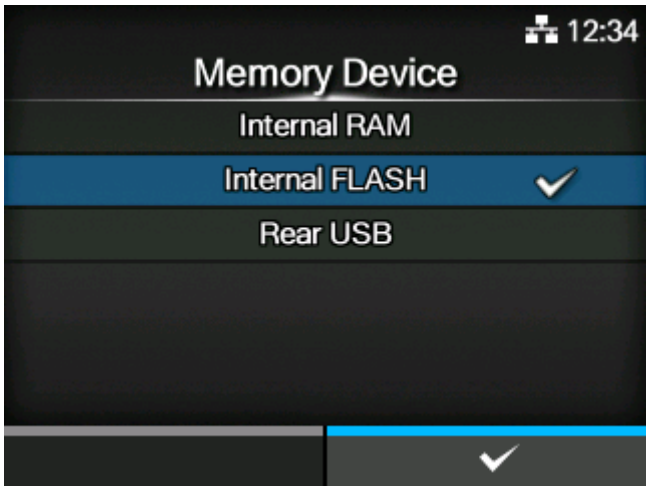

Select the product's memory space in which to store forms, graphics and fonts.

The options are as follows:

Internal RAM

Use the product's internal RAM. The data will be lost if you power off the product.

Internal FLASH

Use the product's internal ROM.

Rear USB

Use the USB memory connected to the USB connector (Type A) on the rear side of the product.

- Be sure to perform a virus check for the USB memory before connecting it to the product. SATO Corporation shall not be held responsible for any product malfunctions caused by a virus spread via USB memory.

[Sim. 300 DPI Head]

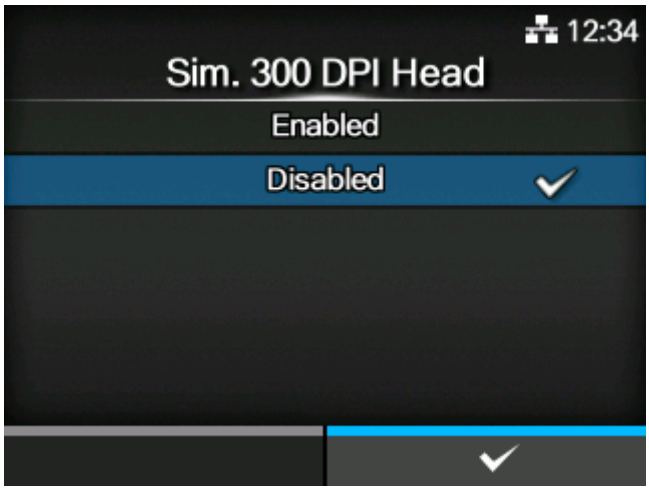

When you are using the product with 305 dpi resolution, enable or disable 300 dpi simulation mode.

The options are as follows:

Enabled

Enable 300 dpi simulation mode. The sizes and positions of objects such as lines, boxes and barcodes in the print data are automatically adjusted to the equivalent 300 dpi sizes and positions for printing.

Disabled

Disable 300 dpi simulation mode.

[AEP]

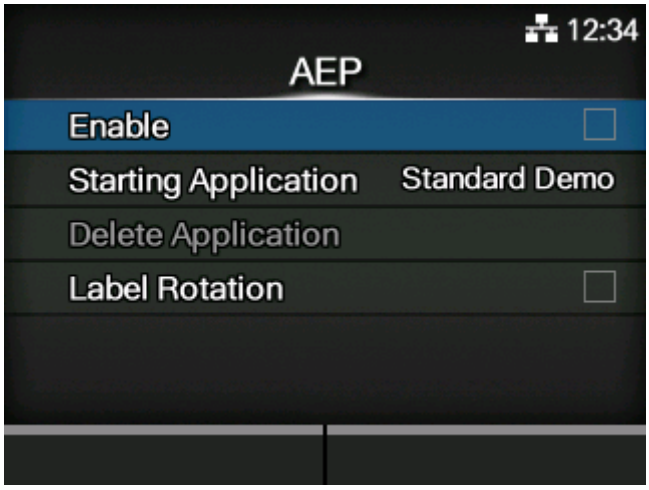

Set the functions for AEP (Application Enabled Printing).

AEP mode allows you to use the product as a stand-alone device by running applications within the product.

Use the standard application, or install custom applications to the product from a USB memory, All-In-One Tool, WebConfig page, etc.

In AEP mode, you can use USB keyboards and barcode scanners to input data.

The setting items are as follows:

Enable

Enable or disable AEP mode.

Starting Application

Select the application to start at product startup in AEP mode.

Delete Application

Delete installed applications.

Label Rotation

Set whether to rotate the page orientation for label printing.

- Contact your SATO sales representative for more information about the use of AEP mode.

[Enable]

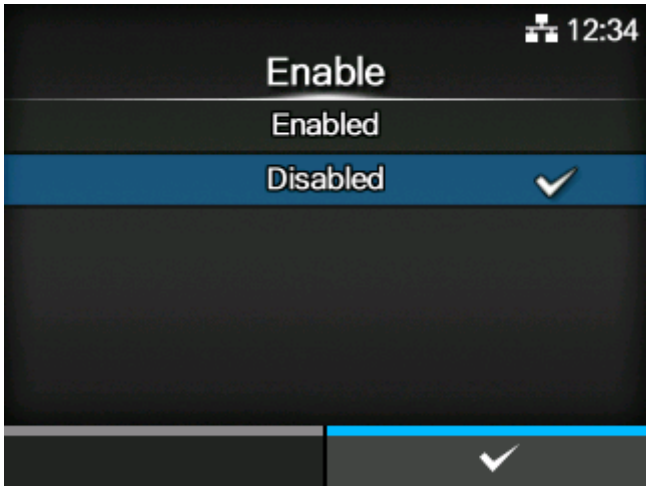

Enable or disable AEP (Application Enabled Printing) mode.

The options are as follows:

Enabled

Enable AEP mode.

Disabled

Disable AEP mode.

- A message prompting you to restart the product will appear on the Online/Offline screen if you have made any changes. In such a case, reboot the product to apply the settings.

[Starting Application]

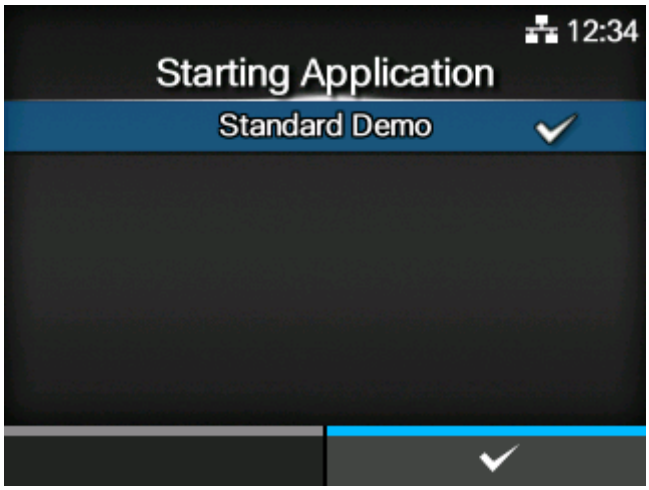

Select the application to start at product startup in AEP (Application Enabled Printing) mode.

Select the application using the / buttons and press the button to confirm.

[Delete Application]

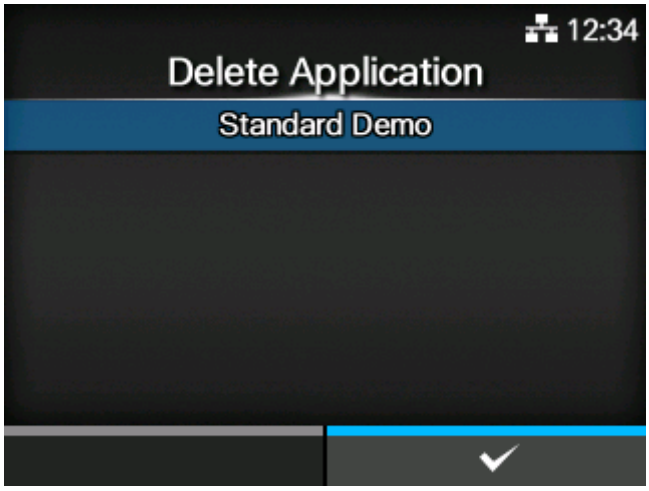

Delete installed applications from the list.

Select the application to be deleted using the / buttons and press the button to confirm.

[Label Rotation]

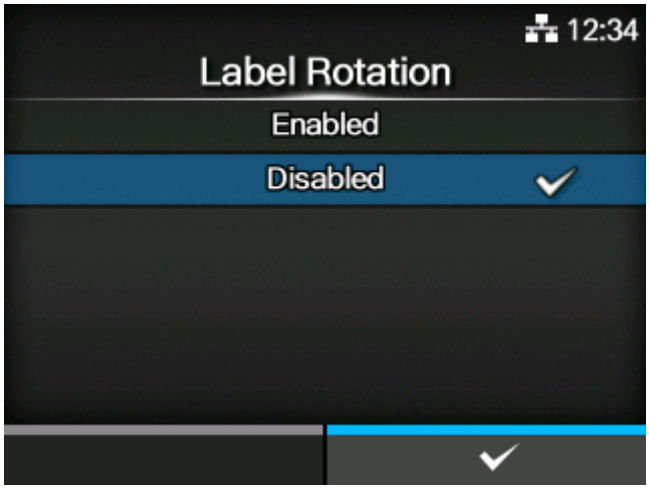

Set whether to rotate the page orientation for label printing.

The options are as follows:

Enabled

Rotates the page orientation 180 degrees.

Disabled

Does not rotate the page orientation.

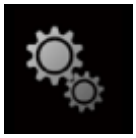

[System] Menu

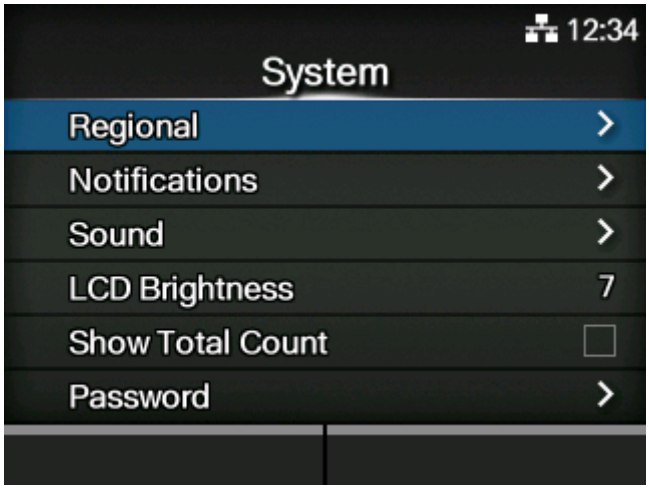

The following settings are available in the [System] menu:

Regional

Set the display language, time zone, calendar (option) and unit.

Notifications

Set the function to notify when to clean and replace parts.

Sound

Set the buzzer sound.

LCD Brightness

Set the brightness of the screen.

Show Total Count

Enable or disable the indication of the total print count.

Password

Set the password.

[Regional]

Set the display language, time zone, calendar (option) and unit.

The setting items are as follows:

Messages

Set the display language of the LCD.

USB Keyboard

Set the language for the USB keyboard connected to the product.

Locale

Set the locale to be used in AEP (Application Enabled Printing) mode.

Unit

Set the unit of length for indication.

Time

Set the time.

- You can set the time only if you have installed the optional battery for the calendar.

Date

Set the date.

- You can set the date only if you have installed the optional battery for the calendar.

Time Zone

Set the time zone.

Display Language Icon

Set whether to display the [Language] icon on the top screen of the [Settings] menu.

[Messages]

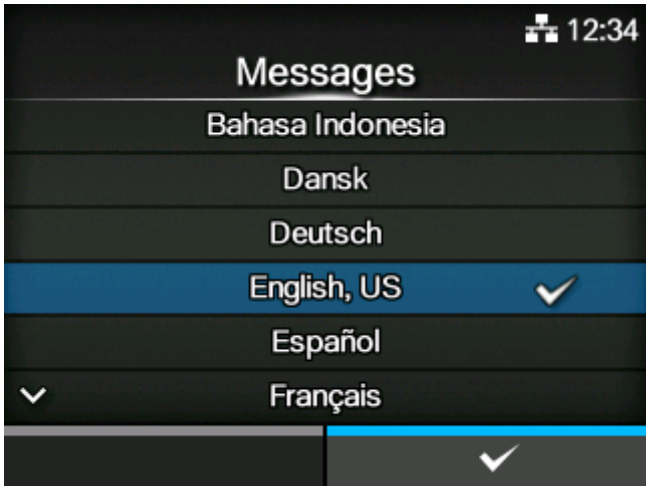

Set the display language of the LCD.

Select the display language from the list.

[USB Keyboard]

Set the language for the USB keyboard connected to the product.

Select the USB keyboard layout from Western and Eastern European languages, Japanese, Chinese and Korean.

- Japanese, Chinese, and Korean only support a change in the layout of the keyboard. The IME (Input Method Editor) is not compatible, so you cannot input hiragana, katakana, or kanji.

[Locale]

Set the locale to be used in AEP (Application Enabled Printing) mode.

This setting determines the format of time, dates, numbers, prices, names of weekdays, months, etc. in AEP applications.

Select the locale from the list.

[Unit]

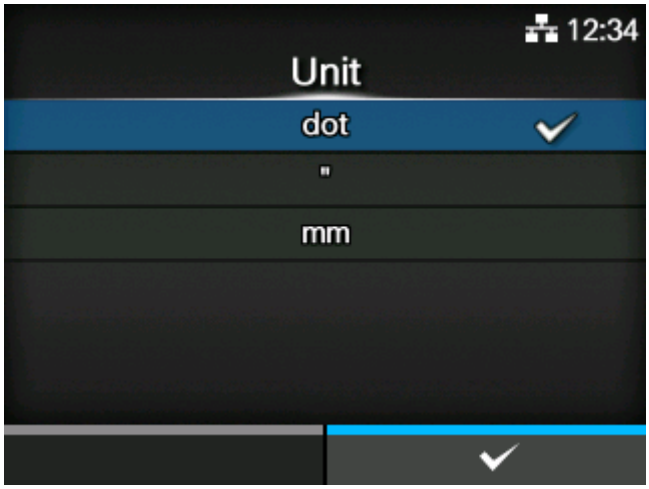

Set the unit of length for indication.

The options are as follows:

- [dot]
- ["](inches)
- [mm]

[Time]

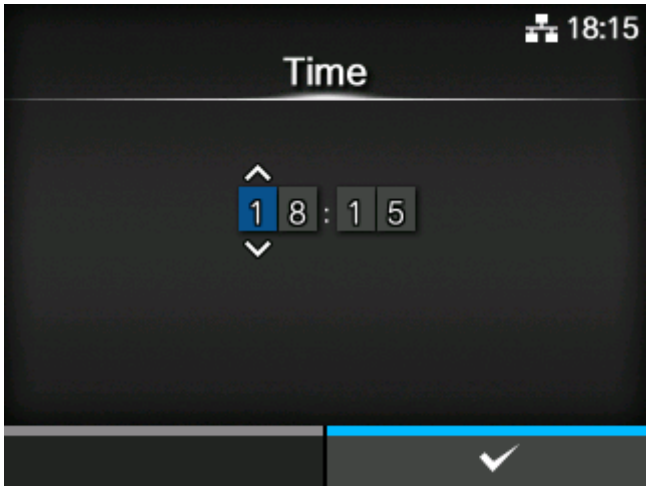

Set the time.

You can set the time only if you have installed the optional battery for the calendar.

After setting the time and pressing the button, the confirmation screen appears.

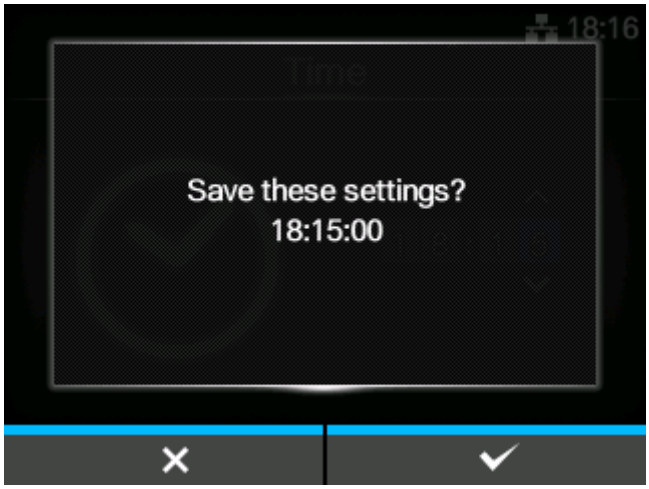

Press the button to cancel, or press the button to confirm the setting.

[Date]

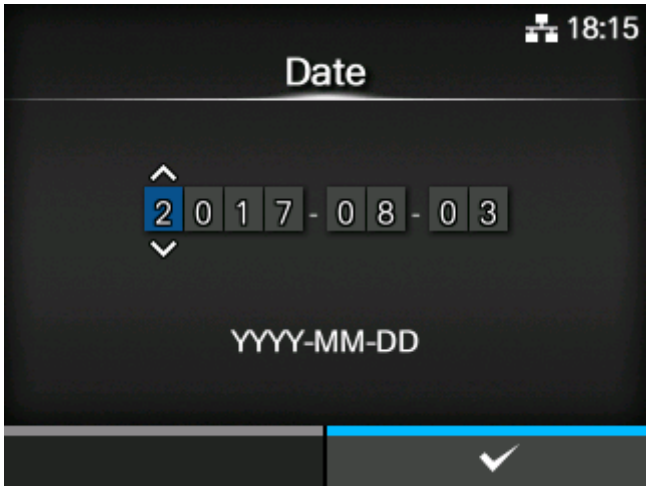

Set the date.

You can set the date only if you have installed the optional battery for the calendar.

The setting range is as follows:

2000-01-01 to 2035-12-31

- The date format is Year - Month - Date.

After setting the date and pressing the button, the confirmation screen appears.

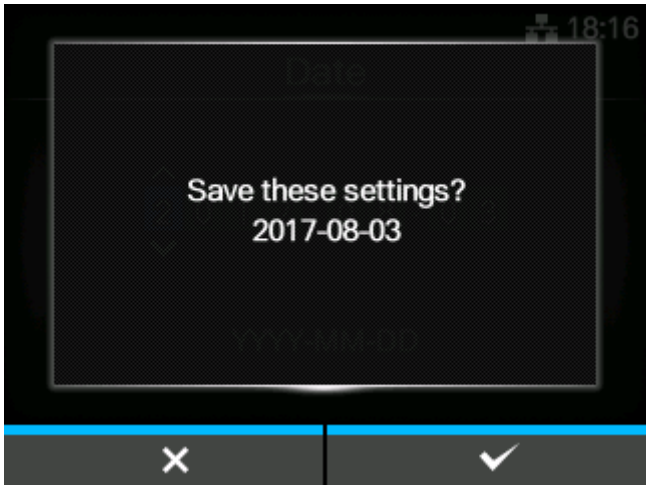

Press the button to cancel, or press the button to confirm the setting.

[Time Zone]

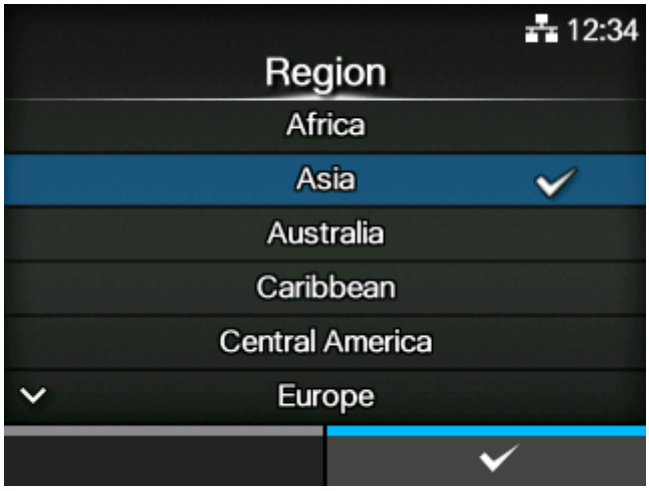

Set the time zone.

First select the region from the [Region] list.

Then select the city from the [City] list.

[Display Language Icon]

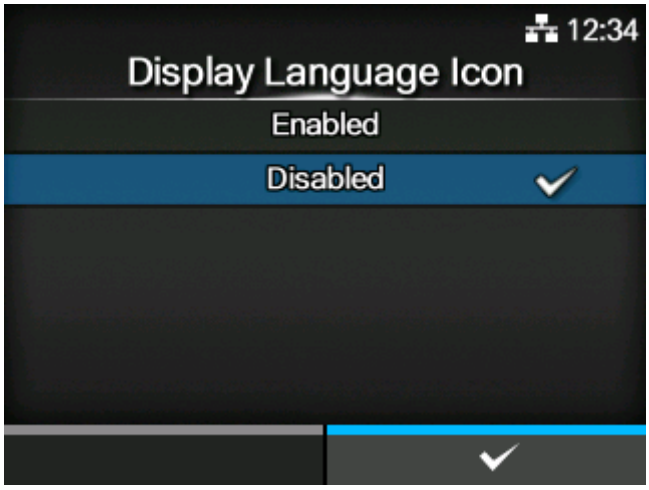

Set whether to display the [Language] icon on the top screen of the [Settings] menu.

The options are as follows:

Enabled

Display the [Language] icon.

Disabled

Do not display the [Language] icon.

By enabling this function, the [Language] icon is added to the [Settings] menu screen as below. You can directly access the display language setting screen.

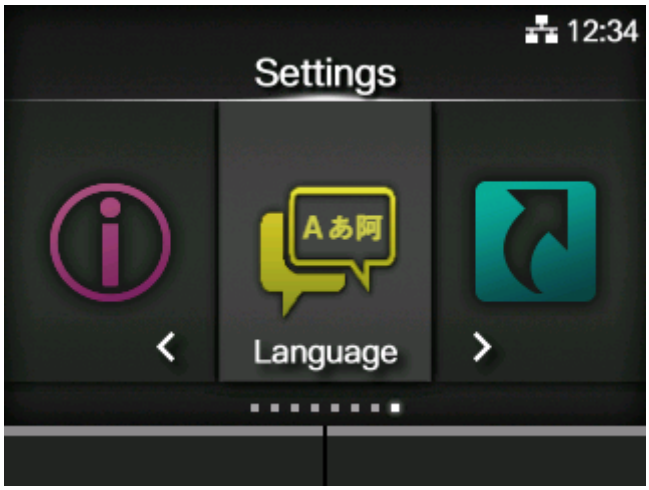

[Notifications]

Set the function to notify when to clean and replace parts.

The setting items are as follows:

Clean Printhead

Notify when the print head needs to be cleaned.

Change Printhead

Notify when the print head needs to be replaced.

Change Platen

Notify when the platen roller needs to be replaced.

[Clean Printhead]

Notify when the print head needs to be cleaned.

The setting items are as follows:

Clean Printhead

Enable or disable the notification function about when the print head needs to be cleaned.

Cleaning Interval

Set the notification interval about when the print head needs to be cleaned.

Clean Counter

Shows the current print distance.

[Clean Printhead]

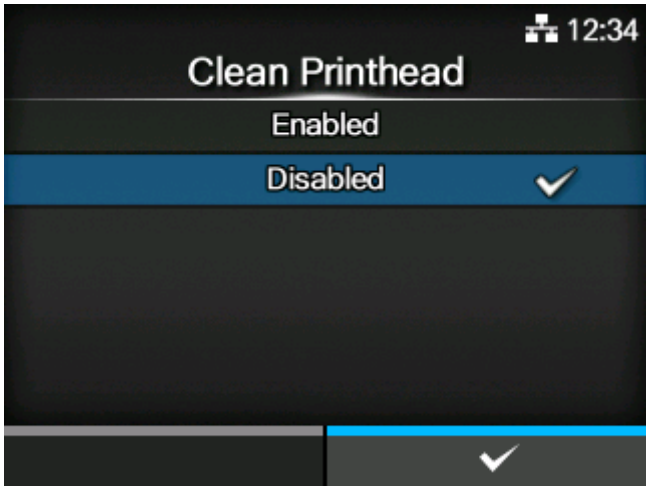

Enable or disable the notification function about when the print head needs to be cleaned.

The options are as follows:

Enabled

Enable the notification function.

Disabled

Disable the notification function.

[Cleaning Interval]

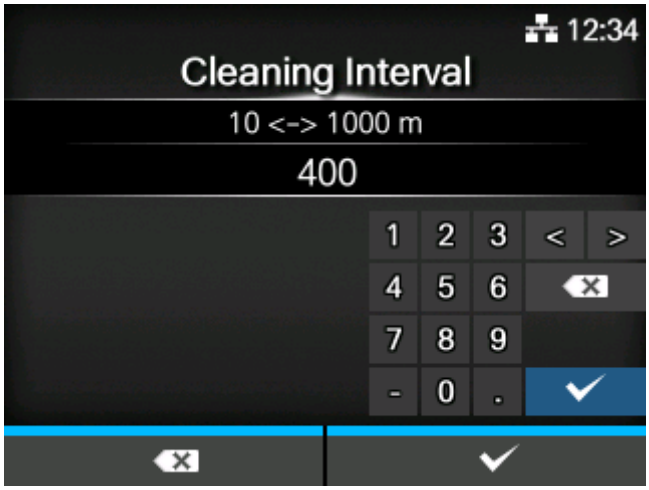

Set the notification interval about when the print head needs to be cleaned.

You can change this setting if you have selected [Enabled] in the [Clean Printhead] menu.

The product shows the print distance as a set value. The setting range is from 10 to 1000 meters.

[Change Printhead]

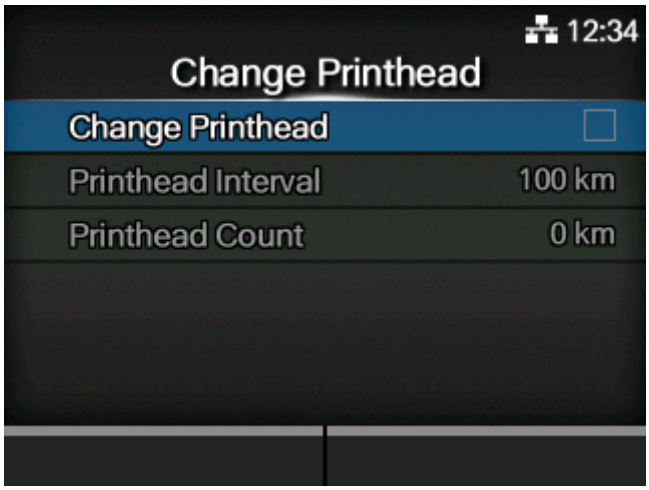

Notify when the print head needs to be replaced.

The setting items are as follows:

Change Printhead

Enable or disable the notification function about when the print head needs to be replaced.

Printhead Interval

Set the notification interval about when the print head needs to be replaced.

Printhead Count

Shows the current print distance.

[Change Printhead]

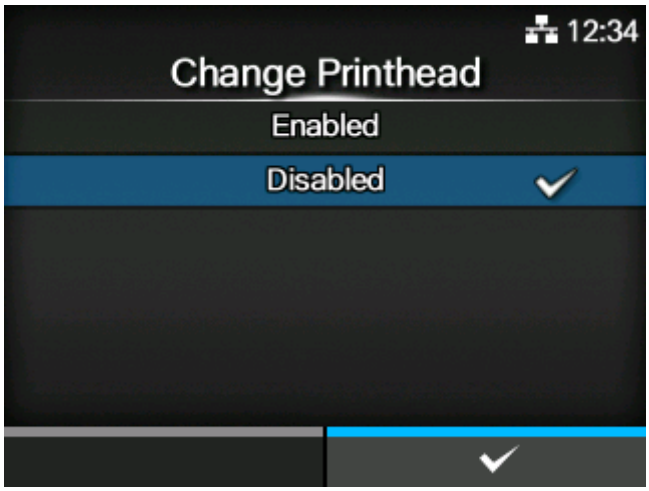

Enable or disable the notification function about when the print head needs to be replaced.

The options are as follows:

Enabled

Enable the notification function.

Disabled

Disable the notification function.

[Printhead Interval]

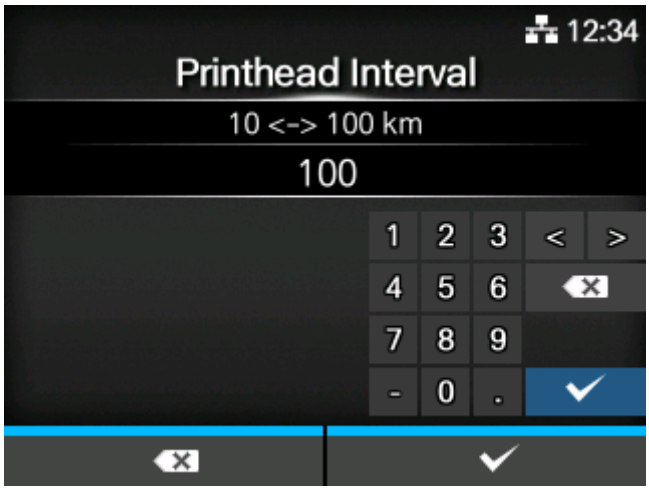

Set the notification interval about when the print head needs to be replaced.

You can change this only if you have selected [Enabled] in the [Change Printhead] menu.

The product shows the print distance as a set value. The setting range is from 10 to 100 km.

[Change Platen]

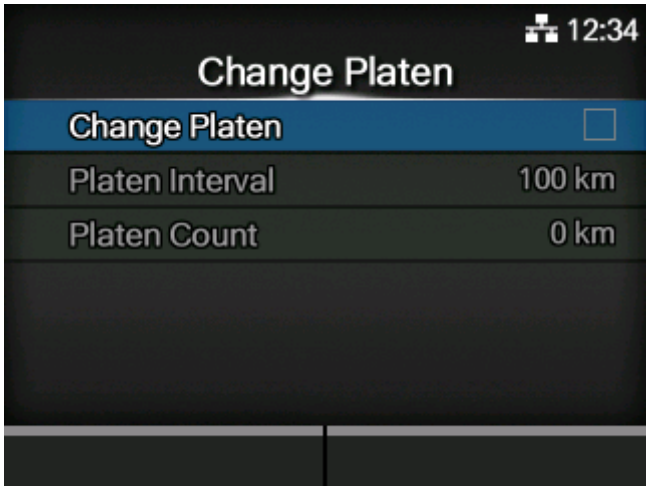

Notify when the platen roller needs to be replaced.

The setting items are as follows:

Change Platen

Enable or disable the notification function about when the platen roller needs to be replaced.

Platen Interval

Set the notification interval about when the platen roller needs to be replaced.

Platen Count

Shows the current distance the platen roller has fed.

[Change Platen]

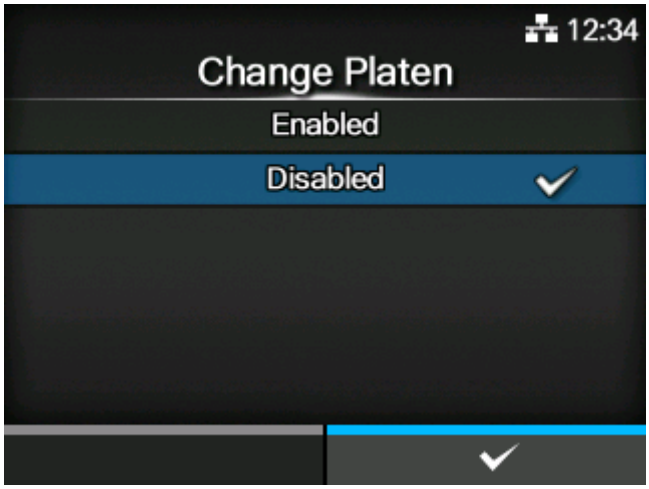

Enable or disable the notification function about when the platen roller needs to be replaced.

The options are as follows:

Enabled

Enable the notification function.

Disabled

Disable the notification function.

[Platen Interval]

Set the notification interval about when the platen roller needs to be replaced.

You can change this only if you have selected [Enabled] in the [Change Platen] menu.

The product shows the fed distance as the setting value. The setting range is from 10 to 100 km.

[Sound]

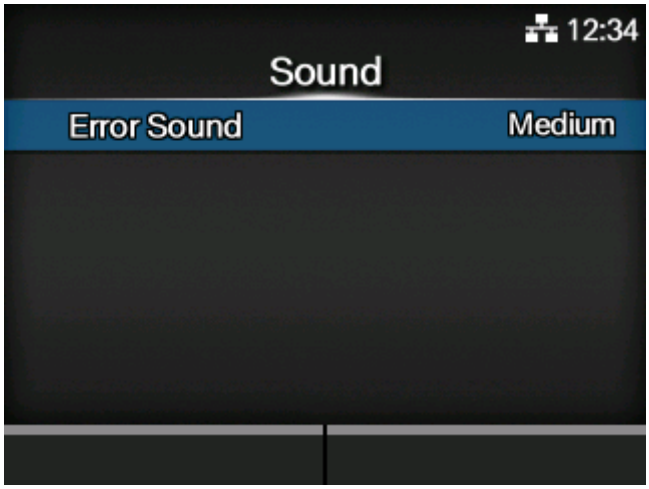

Set the buzzer sound.

The setting item is as follows:

Error Sound

Set the buzzer volume for the error sound.

[Error Sound]

Set the buzzer volume for the error sound.

The options are as follows:

Off

Mute the sound.

Low

Low volume.

Medium

Medium volume.

High

High volume.

[LCD Brightness]

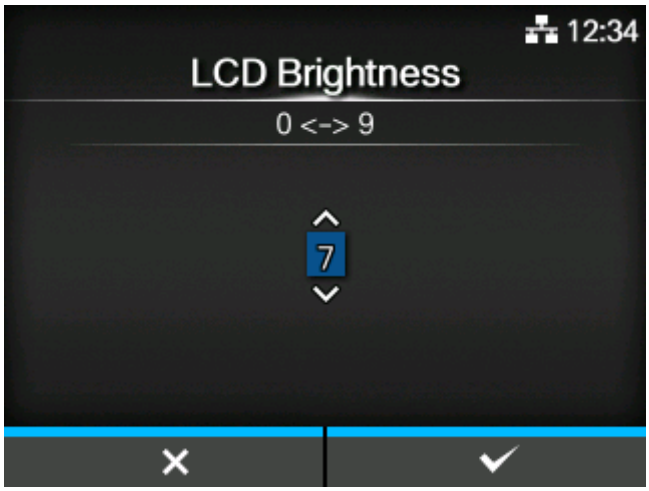

Set the brightness of the screen.

The setting range is from 0 to 9.

0 is the darkest and 9 is the brightest.

Press the button to complete the setting.

- The product has a built-in energy saving function, which will decrease the brightness of the screen when you have not operated it for a specified period.

[Show Total Count]

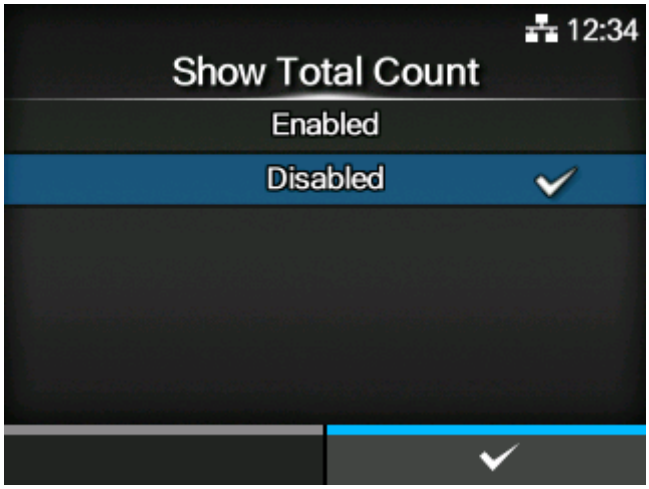

Enable or disable the indication of the total print count.

If set to [Enabled], the total print count appears on both the Online and Offline screens.

The number in the brackets to the right of [QTY] on the Online and Offline screens is the total print count.

The options are as follows:

Enabled

Enable the indication of the total print count.

Disabled

Disable the indication of the total print count.

- Shows the total print count from the time the product is on until it is off.

  When you power off the product, the count is reset to [0].

[Password]

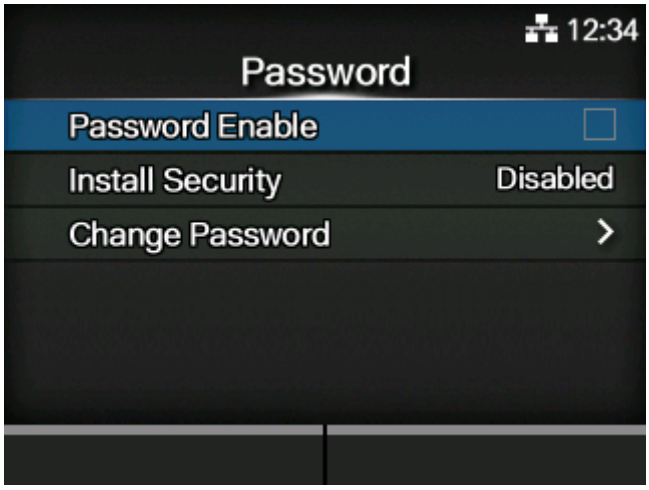

The setting items are as follows:

Password Enable

Enable or disable the password setting.

Install Security

Enable or disable the password input for the package file download.

Change Password

Change the password.

[Password Enable]

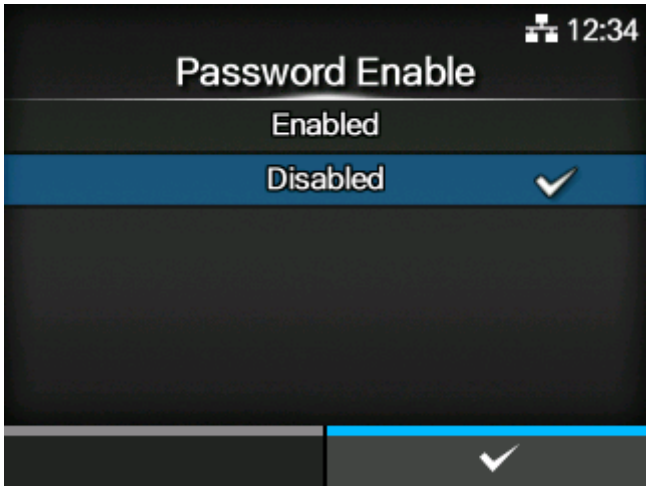

Enable or disable the password setting.

If you have set the password to [Enabled], the product requires you to enter the password set in the [Password] screen before you enter the [Settings] menu.

The options are as follows:

Enabled

Enable the password setting.

Disabled

Disable the password setting.

- The default password is 0310. You can change the password in [Password] > [Change Password] > [level1].

[Install Security]

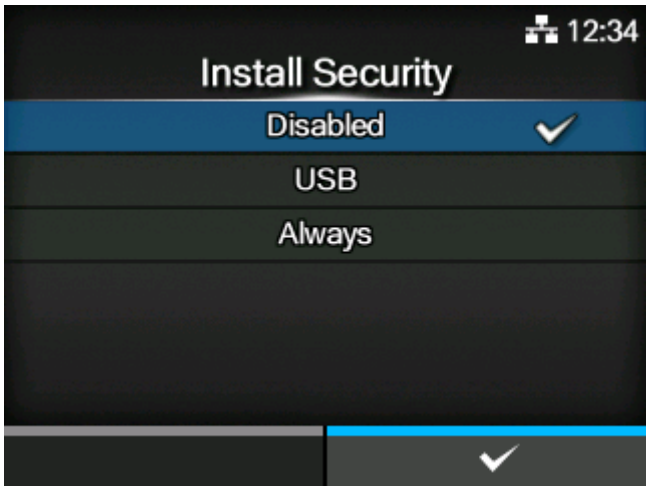

Enable or disable the password input for installing the pkg file to the product.

If you have enabled the password input, the product requires you to enter the password set in the [Password] screen before you can download the package file.

The options are as follows:

Disabled

No password is required to install a pkg file.

USB

Password is required to install a pkg file from the USB memory.

Always

Password is required to install a pkg file from the USB memory or downloaded from computer.

- The password used for installing a pkg file can be any passwords set in the [System] > [Password].

  Contact your SATO reseller or technical support center for more information of the pkg file.

[Change Password]

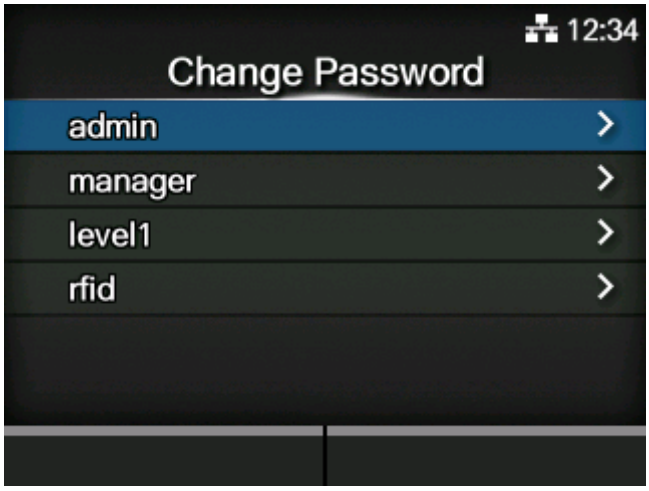

Change the password.

You can enter 4 to 32 characters. Alphabets (capital and small letters), numbers and symbols can be used.

The setting items are as follows:

admin

This is the setting item for factory.

Strictly for SATO authorized personnel use.

manager

The password for accessing the [Service] menu.

Strictly for SATO authorized personnel use.

level1

The password for accessing the [Settings] menu.

rfid

This is the setting item for factory.

Strictly for SATO authorized service personnel use.

- The [admin], [manager] and [rfid] passwords are for factory and maintenance personnel. You cannot change these passwords.

Reset Passwords

If you have forgotten the customized password, you can reset it back to the default password.

1. Turn off the power to the product.
2. Turn on the power switch while pressing and holding the button, button and button simultaneously until the Online/Offline screen appears.
   All the passwords are reset to default passwords.

- This key sequence allows users to access the [Settings] menu with the default passwords as a temporary solution.

  After accessing the [Settings] menu with the default password, you must customize the password again.

[Tools] Menu

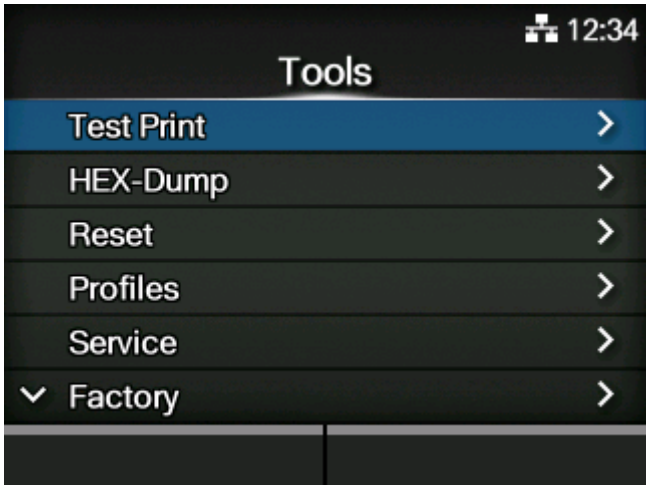

The following settings are available in the [Tools] menu:

Test Print

Perform a test print.

HEX-Dump

Switches to the HEX Dump Mode, saves the received data and the applicator's log files, and manages the product's log files.

Reset

Initialize the settings and counters on the product.

Profile

Save the product's settings as a profile to be loaded as needed.

Service

These are the setting items for service.

Strictly for SATO authorized service personnel use.

Factory

These are the setting items for factory.

Strictly for SATO authorized service personnel use.

Certificates

Install certificates used for HTTPS.

- Available only if you have installed the USB memory.

Clone

Copy the current product settings and data to the USB memory.

- Available only if you have installed the USB memory.

Support Info

Save various information about the product in a text file to the USB memory.

- Available only if you have installed the USB memory.

Startup Guide

Enable or disable the startup guide.

[Test Print]

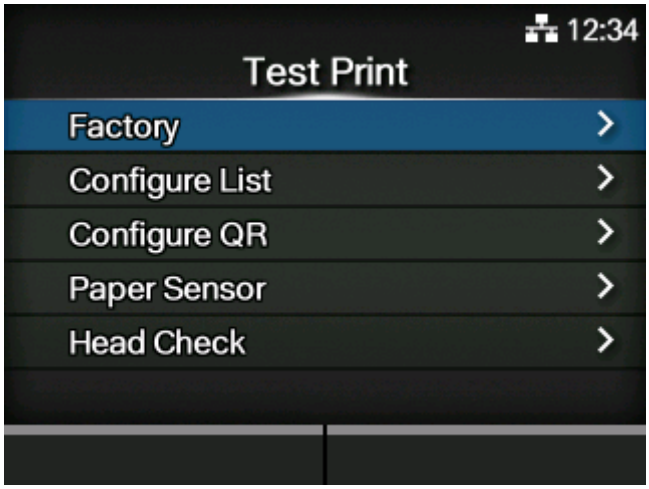

Perform a test print.

The setting items are as follows:

Factory

Perform the factory test print.

Configure List

Print the product's settings information.

Configure QR

Print the product's settings information as a QR code.

Paper Sensor

Print the detection result of the media sensor level.

Head Check

Print a head check.

[Factory]

Perform the factory test print.

1. Check and set the items as listed on the [Factory] menu.
2. Press the button to start the test print. Press the button again to pause the print.

To stop the test print, first pause the print and then press the button.

The setting items are as follows:

Label Width

Set the media width used for the test print.

The options are [Large] (101.6 mm (4”)) and [Small] (50.8 mm (2”)).

Pitch

Set the print position in the vertical direction.

The setting range varies depending on the print resolution of the product.

The setting range is as follows:

Resolution	Setting range
203dpi (1dot = 0.125 mm (0.0049"))	-30 to 0 to 30 dots
305dpi (1dot = 0.083 mm (0.0033"))	-45 to 0 to 45 dots

When you decrease the setting value, the print position moves in the feed direction (toward the front part of the media).

When you increase the setting value, the print position moves opposite the feed direction (toward the end part of the media).

Offset

Set the stop position of the media.

The setting range varies depending on the print resolution of the product.

The setting range is as follows:

Resolution	Setting range
203dpi (1dot = 0.125 mm (0.0049"))	-30 to 0 to 30 dots
305dpi (1dot = 0.083 mm (0.0033"))	-45 to 0 to 45 dots

When you decrease the setting value, the stop position moves in the feed direction (toward the front part of the media).

When you increase the setting value, the stop position moves opposite the feed direction (toward the end part of the media).

Darkness Adjust

Fine tune the print darkness of the test print.

0 is the lightest and 99 is the darkest.

- The value of [Pitch], [Offset] and [Darkness Adjust] set in the [Factory] menu will be reflected to the same item settings in the [Configure List] menu, [Configure QR] menu, [Paper Sensor] menu and [Head Check] menu.

[Configure List]

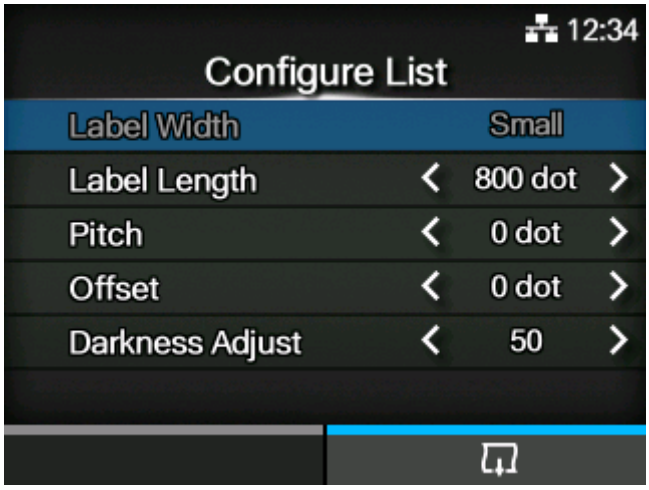

Print the product's settings information.

1. Check and set the items as listed on the [Configure List] menu.
2. Press the button to start the test print. Press the button again to pause the print.

To stop the test print, first pause the print and then press the button.

The setting items are as follows:

Label Width

Shows the necessary media width of the test print.

The necessary media width is 50.8 mm (2") for [Small].

Label Length

Set the length of one piece of the media used for the test print.

The setting range varies depending on the print resolution of the product.

The setting range is as follows:

Resolution	Setting range
203 dpi (1 dot = 0.125 mm (0.0049"))	400 to 1600 dots
305 dpi (1 dot = 0.083 mm (0.0033"))	600 to 2400 dots

Pitch

Set the print position in the vertical direction.

The setting range varies depending on the print resolution of the product.

The setting range is as follows:

Resolution	Setting range
203 dpi (1 dot = 0.125 mm (0.0049"))	-30 to 0 to 30 dots
305 dpi (1 dot = 0.083 mm (0.0033"))	-45 to 0 to 45 dots

When you decrease the setting value, the print position moves in the feed direction (toward the front part of the media).

When you increase the setting value, the print position moves opposite the feed direction (toward the end part of the media).

Offset

Set the stop position of the media.

The setting range varies depending on the print resolution of the product.

The setting range is as follows:

Resolution	Setting range
203 dpi (1 dot = 0.125 mm (0.0049"))	-30 to 0 to 30 dots

Resolution	Setting range
305 dpi (1 dot = 0.083 mm (0.0033"))	-45 to 0 to 45 dots

When you decrease the setting value, the stop position moves in the feed direction (toward the front part of the media).

When you increase the setting value, the stop position moves opposite the feed direction (toward the end part of the media).

Darkness Adjust

Fine tune the print darkness of the test print.

0 is the lightest and 99 is the darkest.

- The value of [Label Length], [Pitch], [Offset] and [Darkness Adjust] set in the [Configure List] menu will be reflected to the same item settings in the [Factory] menu, [Configure QR] menu, [Paper Sensor] menu and [Head Check] menu.

[Configure QR]

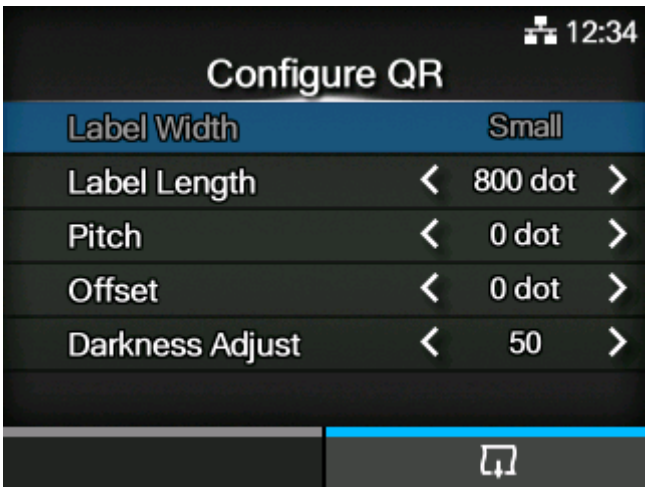

Print the product's settings information as a QR code.

1. Check and set the items as listed on the [Configure QR] menu.
2. Press the button to start the test print. Press the button again to pause the print.

To stop the test print, first pause the print and then press the button.

The setting items are as follows:

Label Width

Shows the necessary media width of the test print.

The necessary media width is 50.8 mm (2") for [Small].

Label Length

Set the length of one piece of the media used for the test print.

The setting range varies depending on the print resolution of the product.

The setting range is as follows:

Resolution	Setting range
203 dpi (1 dot = 0.125 mm (0.0049"))	400 to 1600 dots
305 dpi (1 dot = 0.083 mm (0.0033"))	600 to 2400 dots

Pitch

Set the print position in the vertical direction.

The setting range varies depending on the print resolution of the product.

The setting range is as follows:

Resolution	Setting range
203 dpi (1 dot = 0.125 mm (0.0049"))	-30 to 0 to 30 dots
305 dpi (1 dot = 0.083 mm (0.0033"))	-45 to 0 to 45 dots

When you decrease the setting value, the print position moves in the feed direction (toward the front part of the media).

When you increase the setting value, the print position moves opposite the feed direction (toward the end part of the media).

Offset

Set the stop position of the media.

The setting range varies depending on the print resolution of the product.

The setting range is as follows:

Resolution	Setting range
203 dpi (1 dot = 0.125 mm (0.0049"))	-30 to 0 to 30 dots
305 dpi (1 dot = 0.083 mm (0.0033"))	-45 to 0 to 45 dots

When you decrease the setting value, the stop position moves in the feed direction (toward the front part of the media).

When you increase the setting value, the stop position moves opposite the feed direction (toward the end part of the media).

Darkness Adjust

Fine tune the print darkness of the test print.

0 is the lightest and 99 is the darkest.

- The value of [Label Length], [Pitch], [Offset] and [Darkness Adjust] set in the [Configure QR] menu will be reflected to the same item settings in the [Factory] menu, [Configure List] menu, [Paper Sensor] menu and [Head Check] menu.

[Paper Sensor]

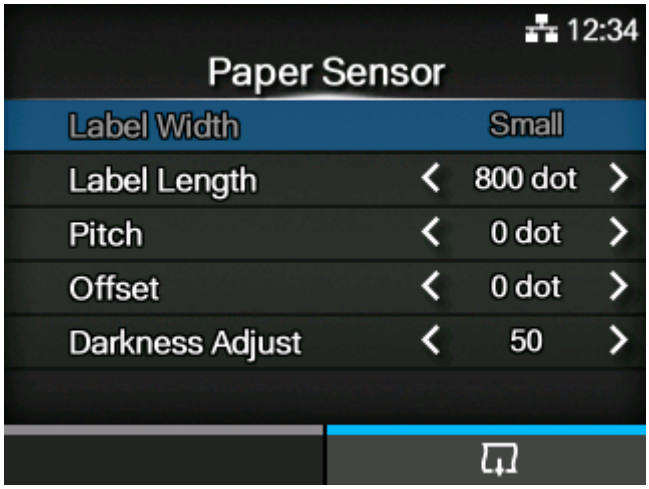

Print the detection result of the media sensor level.

1. Check and set the items as listed on the [Paper Sensor] menu.
2. Press the button to start the test print. Press the button again to pause the print.

To stop the test print, first pause the print and then press the button.

The setting items are as follows:

Label Width

Shows the necessary media width of the test print.

The necessary media width is 101.6 mm (4") for [Large] and 50.8 mm (2") for [Small].

Label Length

Set the length of one piece of the media used for the test print.

The setting range varies depending on the print resolution of the product.

The setting range is as follows:

Resolution	Setting range
203 dpi (1 dot = 0.125 mm (0.0049"))	400 to 1600 dots

Resolution	Setting range
305 dpi (1 dot = 0.083 mm (0.0033"))	600 to 2400 dots

Pitch

Set the print position in the vertical direction.

The setting range varies depending on the print resolution of the product.

The setting range is as follows:

Resolution	Setting range
203 dpi (1 dot = 0.125 mm (0.0049"))	-30 to 0 to 30 dots
305 dpi (1 dot = 0.083 mm (0.0033"))	-45 to 0 to 45 dots

When you decrease the setting value, the print position moves in the feed direction (toward the front part of the media).

When you increase the setting value, the print position moves opposite the feed direction (toward the end part of the media).

Offset

Set the stop position of the media.

The setting range varies depending on the print resolution of the product.

The setting range is as follows:

Resolution	Setting range
203 dpi (1 dot = 0.125 mm (0.0049"))	-30 to 0 to 30 dots
305 dpi (1 dot = 0.083 mm (0.0033"))	-45 to 0 to 45 dots

When you decrease the setting value, the stop position moves in the feed direction (toward the front part of the media).

When you increase the setting value, the stop position moves opposite the feed direction (toward the end part of the media).

Darkness Adjust

Fine tune the print darkness of the test print.

0 is the lightest and 99 is the darkest.

- The value of [Label Length], [Pitch], [Offset] and [Darkness Adjust] set in the [Paper Sensor] menu will be reflected to the same item settings in the [Factory] menu, [Configure List] menu, [Configure QR] menu and [Head Check] menu.

[Head Check]

Print a head check.

1. Check and set the items as listed on the [Head Check] menu.
2. Press the button to start printing the head check. Press the button again to pause the print.

To stop printing the head check, first pause the print and then press the button.

The setting items are as follows:

Label Width

Set the width of the media used to print the head check.

The setting range varies depending on the print resolution of the product.

The setting range is as follows:

Resolution	Setting range
203 dpi (1 dot = 0.125 mm (0.0049"))	320 to 832 dots
305 dpi (1 dot = 0.083 mm (0.0033"))	480 to 1248 dots

Label Length

Set the length of one piece of the media used for the head check.

The setting range varies depending on the print resolution of the product.

The setting range is as follows:

Resolution	Setting range
203 dpi (1 dot = 0.125 mm (0.0049"))	40 to 240 dots
305 dpi (1 dot = 0.083 mm (0.0033"))	60 to 360 dots

Pitch

Set the print position in the vertical direction.

The setting range varies depending on the print resolution of the product.

The setting range is as follows:

Resolution	Setting range
203 dpi (1 dot = 0.125 mm (0.0049"))	-30 to 0 to 30 dots
305 dpi (1 dot = 0.083 mm (0.0033"))	-45 to 0 to 45 dots

When you decrease the setting value, the print position moves in the feed direction (toward the front part of the media).

When you increase the setting value, the print position moves opposite the feed direction (toward the end part of the media).

Offset

Set the stop position of the media.

The setting range varies depending on the print resolution of the product.

The setting range is as follows:

Resolution	Setting range
203 dpi (1 dot = 0.125 mm (0.0049"))	-30 to 0 to 30 dots
305 dpi (1 dot = 0.083 mm (0.0033"))	-45 to 0 to 45 dots

When you decrease the setting value, the stop position moves in the feed direction (toward the front part of the media).

When you increase the setting value, the stop position moves opposite the feed direction (toward the end part of the media).

Darkness Adjust

Fine tune the print darkness of the head check.

0 is the lightest and 99 is the darkest.

[HEX-Dump]

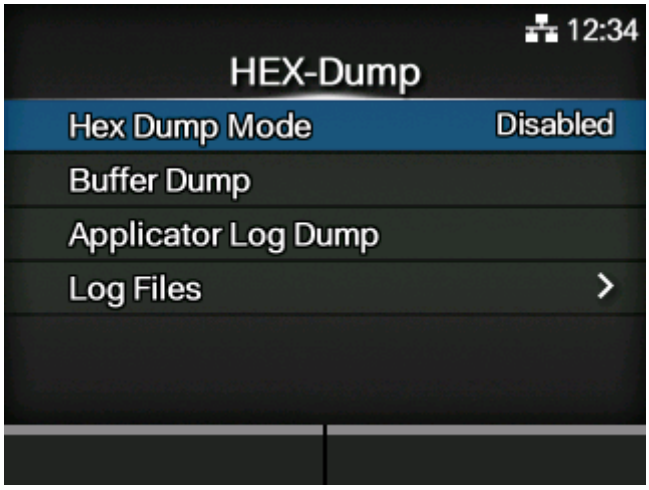

Switches to the HEX Dump Mode, saves the received data and the applicator's log files, and manages the product's log files.

The setting items are as follows:

Hex Dump Mode

Enable or disable the Hex Dump mode.

Buffer Dump

Save the receive buffer data to the product.

Applicator Log Dump

Save the log files of the applicator to the product.

Log Files

Manage the log files of the product.

[Hex Dump Mode]

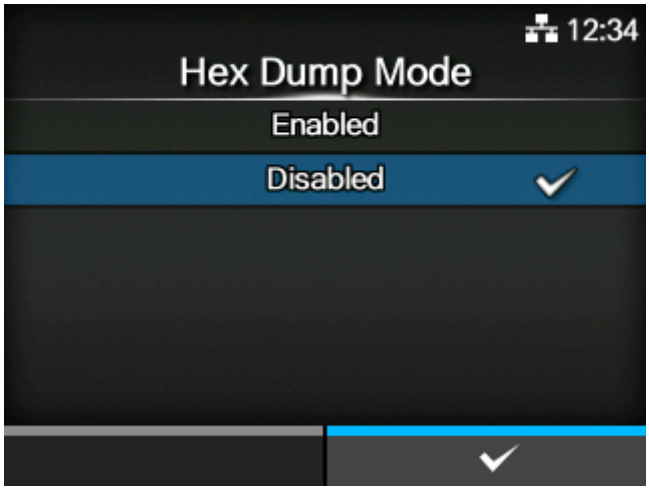

Enable or disable the Hex Dump mode.

If you set [Hex Dump Mode] to [Enabled], the product prints the received data and at the same time creates a file of the received data inside "hexdump/".

When you return the setting to [Disabled], you can check the file on the screen.

- If you set [Hex Dump Mode] to [Enabled], the design of the Online/Offline screen changes.
- You can save a maximum of 10 received data files for each type of interface. Depending on the file size, the number of files you can save will be less than 10.
- The details of the files created in "hexdump/" in the product are as follows:

LAN00xx.bin

Received data through LAN.

LPT00xx.bin

Received data through IEEE1284.

PIPE00xx.bin

Received data through pipe.

SCI00xx.bin

Received data through RS-232C.

[Buffer Dump]

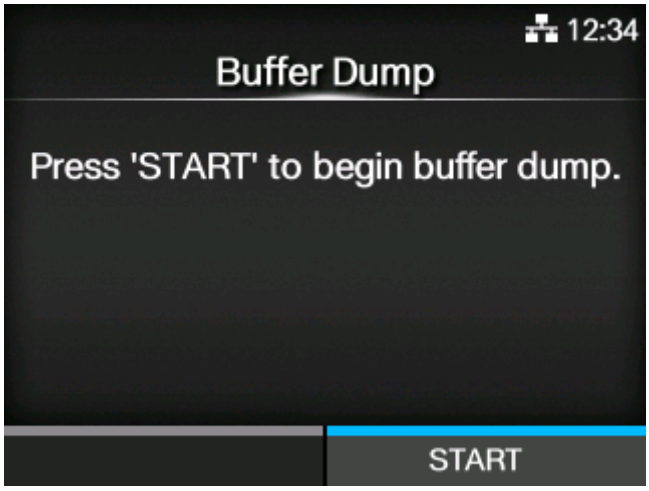

Save the receive buffer data to the product.

Available only if you have set to [Disabled] in the [Hex Dump Mode] menu.

Press the [START] button (button) on the startup screen to save the data to the product.

Save the receive buffer data to "buff/" in the product.

- The data files of the receive buffer are created for each type of interface.
- The details of the files created in "buff/" in the product are as follows:

LAN0001.bin

The contents of the receive buffer for LAN.

LPT0001.bin

The contents of the receive buffer for IEEE1284.

PIPE0001.bin

The contents of the receive buffer for pipe.

SCI0001.bin

The contents of the receive buffer for RS-232C.

- If you perform the [Buffer Dump] again, the existing file will be overwritten.

[Applicator Log Dump]

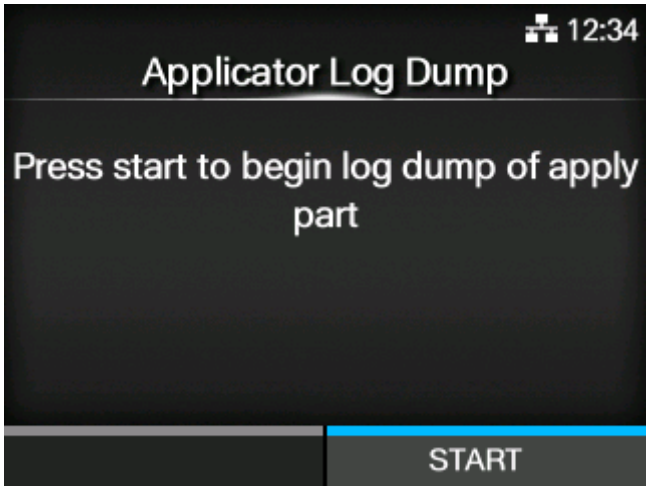

Save the log files of the applicator to the product.

Press the [START] button (button) on the startup screen to save the data to the product.

Save the log data of the applicator to the "hexdump/" in the product.

- If you perform the [Applicator Log Dump] again, the existing file will be overwritten.

[Log Files]

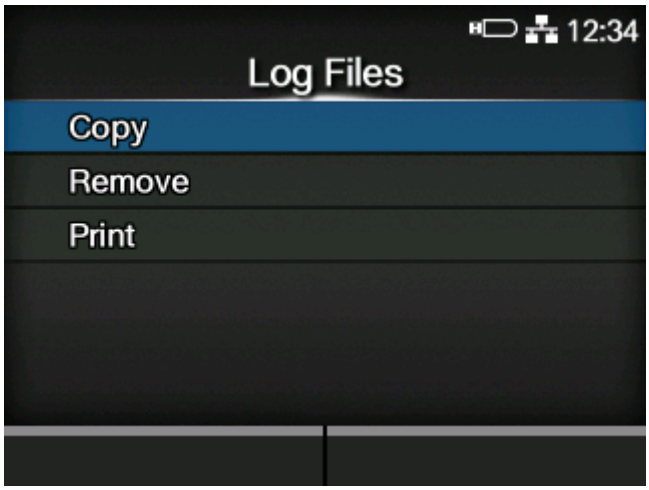

The setting items are as follows:

Copy

Copies the product's log files to USB memory.

- Available only if you have installed the USB memory.

Remove

Delete the log files of the product.

Print

Print a hex dump of the log files of the product.

[Copy]

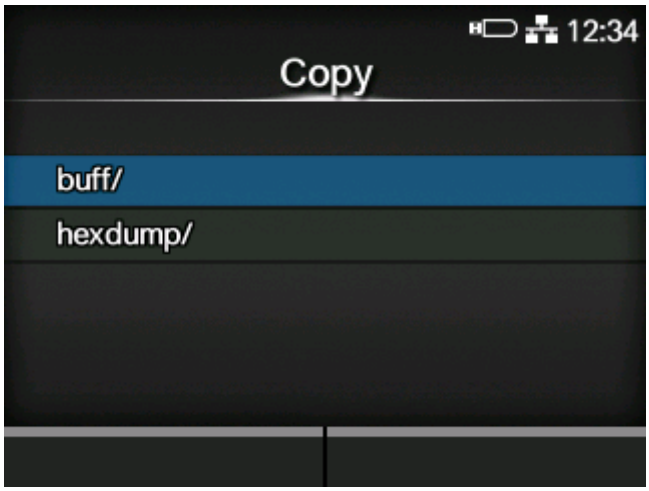

Copies the product's log files to USB memory.

Available only if you have installed the USB memory.

- Be sure to perform a virus check for the USB memory before connecting it to the product. SATO Corporation shall not be held responsible for any product malfunctions caused by a virus spread via USB memory.

The procedure to copy the log files is as follows:

1. Select the file type to copy and press the button.
   - **buff/**

     The buffer data saved when you perform the [Buffer Dump].
   - **hexdump/**

     The receive data created in [Hex Dump Mode] or the receive log data saved when you perform [Applicator Log Dump].

2. Select the file to copy and press the button. A check mark is shown on the right side of the file name.

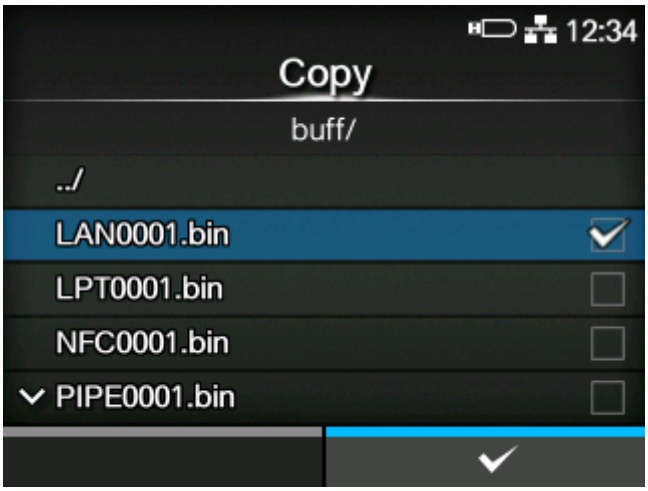

3. After you select the file, press the button to copy the selected file to the USB memory.

- When [Hex Dump Mode] is set to [Enabled], it may take some time before the files appear.

[Remove]

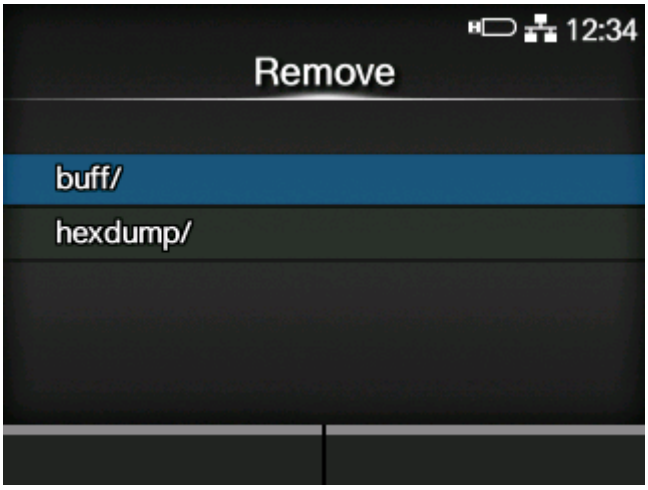

Delete the log files of the product.

The procedure to delete the log files is as follows:

1. Select the file type to delete and press the button.
   - **buff/**

     The buffer data saved when you perform the [Buffer Dump].
   - **hexdump/**

     The receive data created in [Hex Dump Mode] or the receive log data saved when you perform [Applicator Log Dump].

2. Select the file to delete and press the button. A checkmark appears on the right side of the file name.

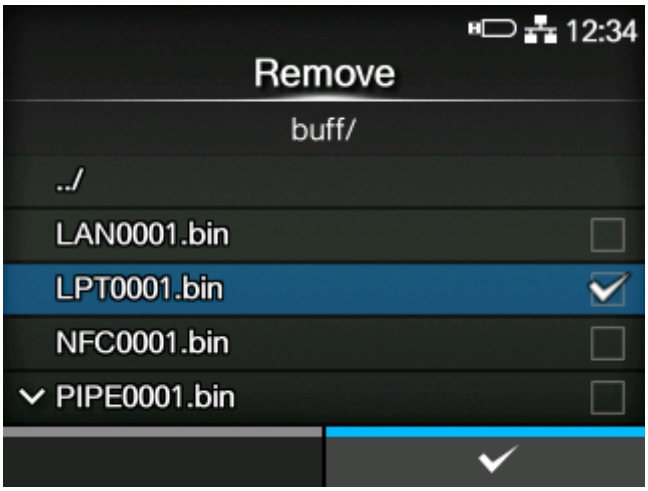

3. After you select the file, press the button to delete the selected file.

- When [Hex Dump Mode] is set to [Enabled], it may take some time before the files appear.

[Print]

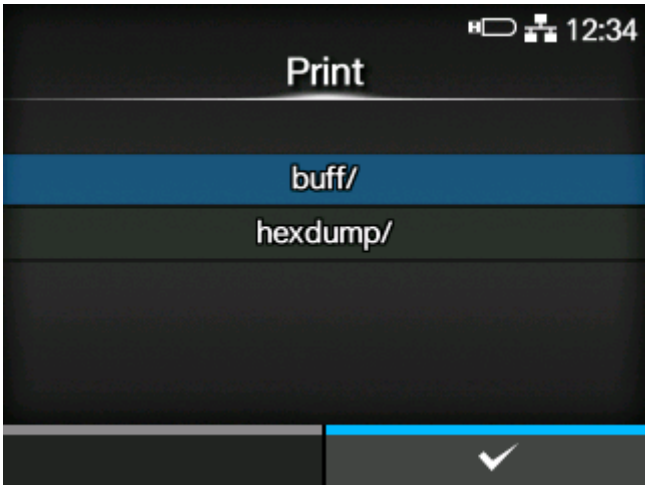

Print a hex dump of the log files of the product.

The procedure to print the log files is as follows:

1. Select the file type to print and press the button.
   - **buff/**

     The buffer data saved when you perform the [Buffer Dump].
   - **hexdump/**

     The receive data created in [Hex Dump Mode] or the receive log data saved when you perform [Applicator Log Dump].

2. Select the file to print and press the button or button to perform the dump print.

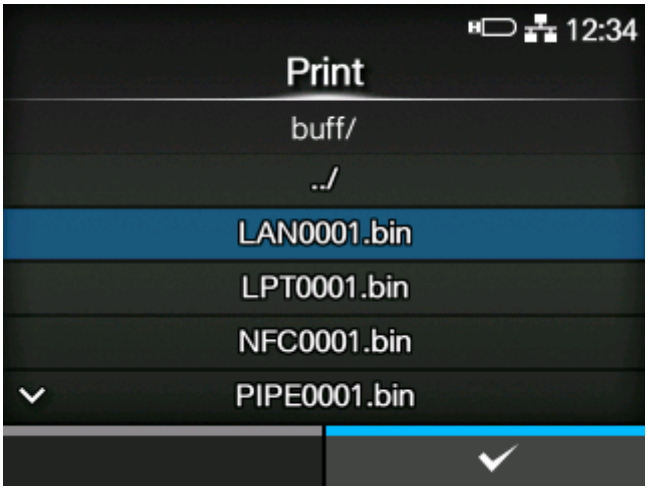

- Printing the contents of the file may use a lot of media.

- When [Hex Dump Mode] is set to [Enabled], it may take some time before the files appear.

[Reset]

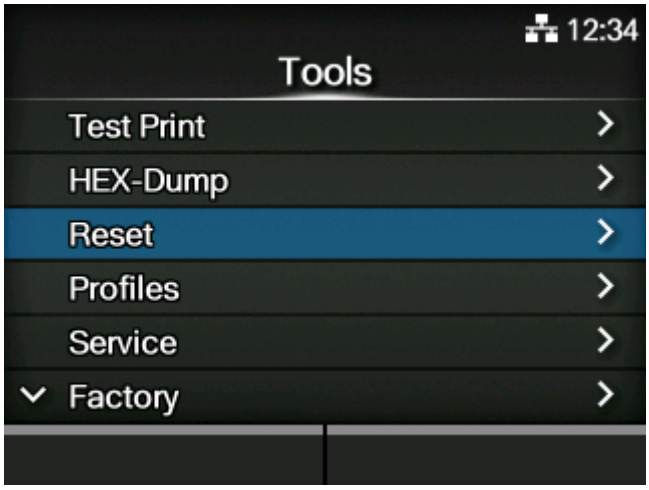

Initialize the setting values and data saved on the product.

Press button to show the [Select] menu.

[Select]

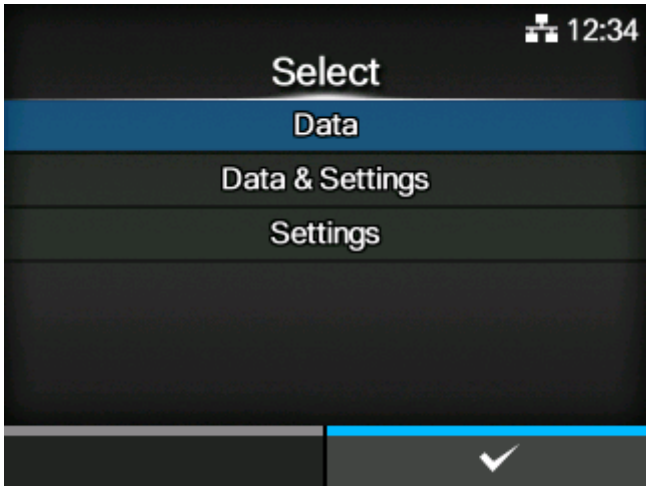

Select the items to be initialized.

The items are as follows:

Data

Initialize the data saved on the product.

Data & Settings

Initialize the data and setting values on the product.

Settings

Initialize the setting values on the product.

[Data]

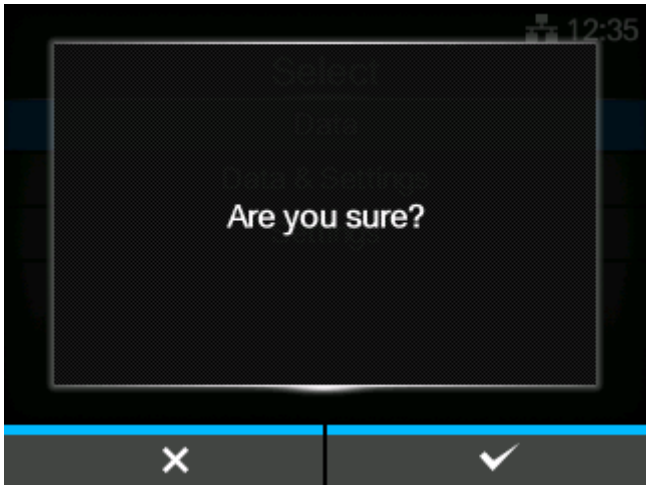

Initialize the data saved on the product.

The data to be initialized are the fonts and graphics registered in the product.

When you select [Data], the confirmation screen appears.

Press the button to cancel or button to perform the initialization.

The product will reboot after the initialization.

- Normally, it is not necessary to perform the initialization. Doing so could change the print conditions.

[Data & Settings]

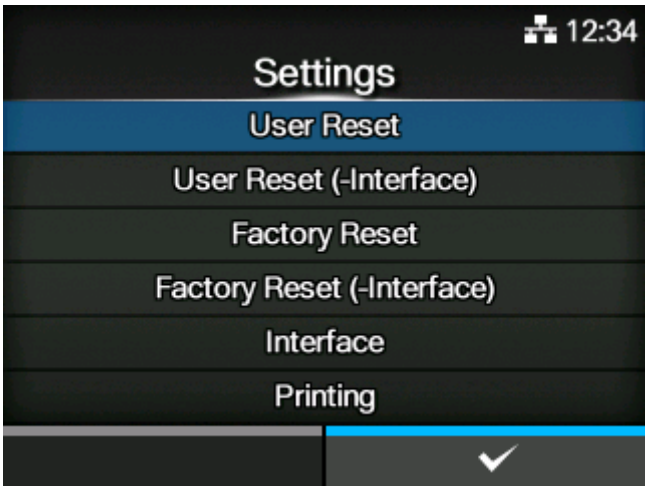

Initialize the data and setting values on the product.

Select the setting items to be initialized.

The options are as follows:

User Reset

Initialize the data and setting values.

User Reset (-Interface)

Initialize the data and setting values that are not included in the [Interface] menu.

Factory Reset

Initialize to the status after factory shipment.

Factory Reset (-Interface)

Initialize the items that are not included in the [Interface] menu to the status after factory shipment.

Interface

Initialize the data and setting values in the [Interface] menu.

Printing

Initialize the data and setting values in the [Printing] menu.

Select the item to be initialized using the ▲/▼ buttons and then press the button to show the confirmation screen.

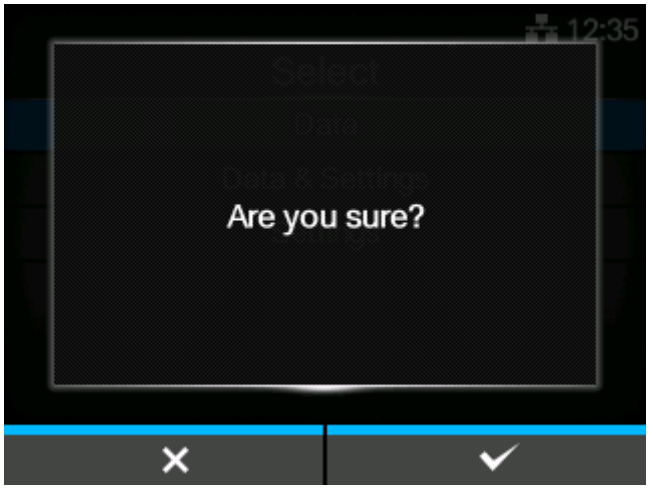

Press the button to cancel or button to perform the initialization.

The product will reboot after the initialization.

- The data to be initialized are the fonts and graphics registered in the product.

[Settings]

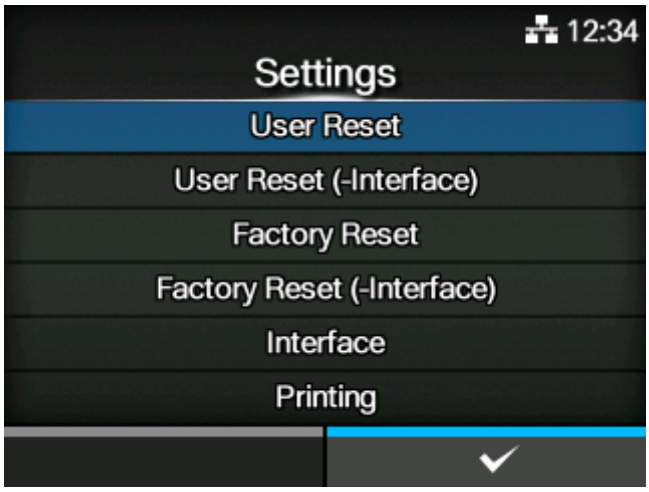

Select the setting items to be initialized.

The options are as follows:

User Reset

Initialize the setting values.

User Reset (-Interface)

Initialize the setting values that are not included in the [Interface] menu.

Factory Reset

Initialize to the status after factory shipment.

Factory Reset (-Interface)

Initialize the items that are not included in the [Interface] menu to the status after factory shipment.

Interface

Initialize the setting values in the [Interface] menu.

Printing

Initialize the setting values in the [Printing] menu.

Select the item to be initialized using the / buttons and then press the button to show the confirmation screen.

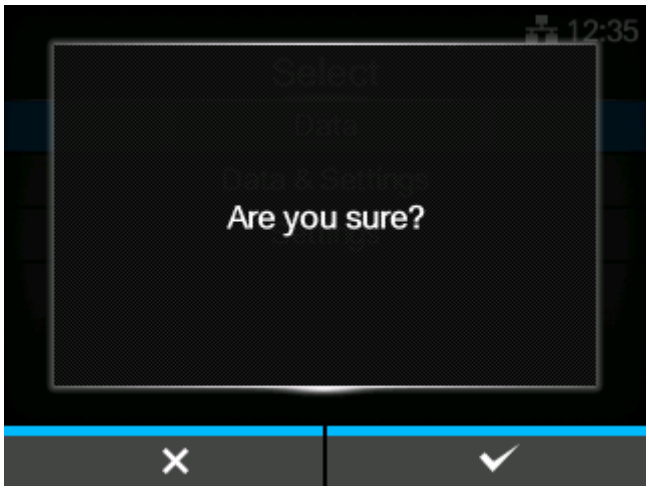

Press the button to cancel or button to perform the initialization.

After initialization, if a message prompting you to restart the product appears on the Online/Offline screen, reboot the product to apply the settings.

[Profile]

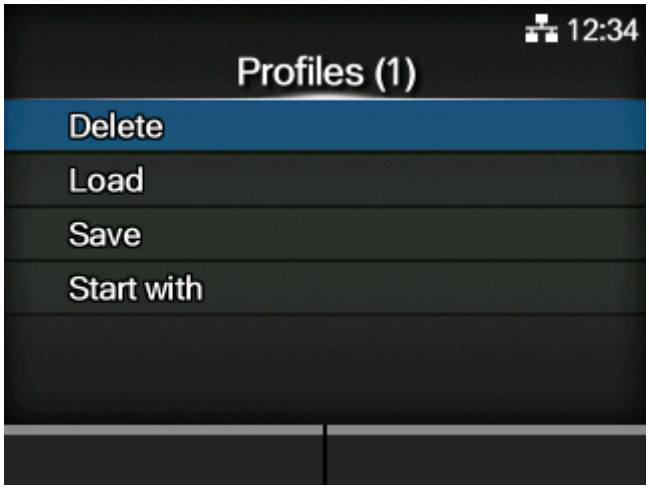

Maintain the customized profile of the product settings.

The name of the last loaded profile appears in the parentheses.

The setting items are as follows:

Delete

Delete the profile of the product.

- Not available if no profile is saved.

Load

Load the profile of the product.

- Not available if no profile is saved.

Save

Save the current product settings as a new profile.

Start with

Select the profile to be loaded at product startup.

- Not available if no profile is saved.

[Delete]

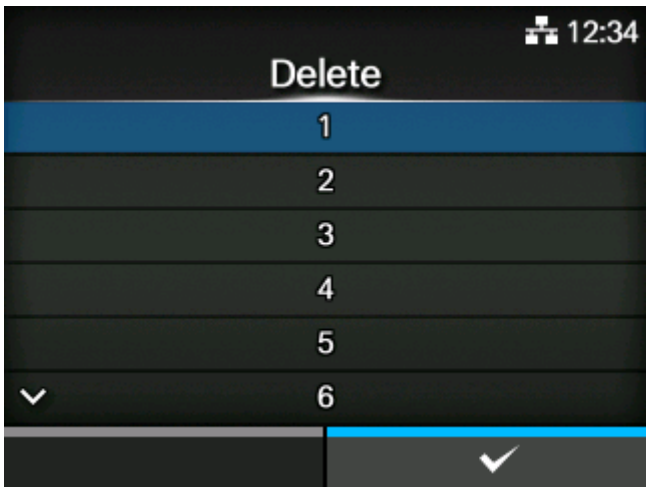

Delete the profile of the product.

The procedure to delete the profile is as follows:

1. Select the profile to be deleted using the / buttons.
2. Press the button or press the button to confirm.
   The profile name is deleted from the list.

[Load]

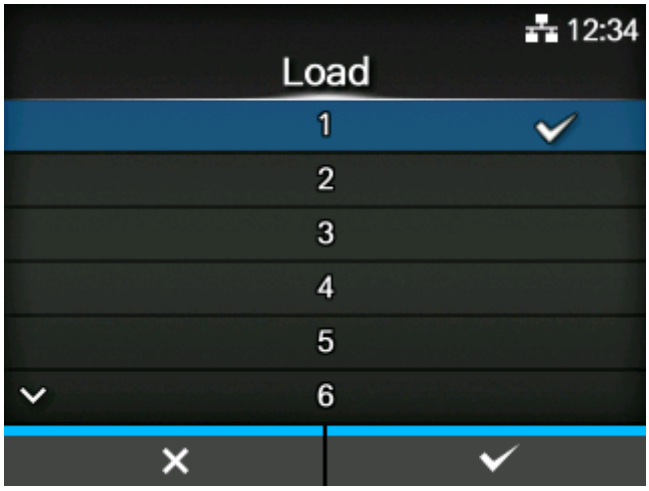

Load the profile of the product.

The procedure to load the profile is as follows:

1. Select the profile to be loaded using the / buttons.
2. Press the button or press the button to confirm.

   A checkmark appears on the right side of the loaded profile name. And the name of the loaded profile appears on the [Profile] menu in the parentheses.

[Save]

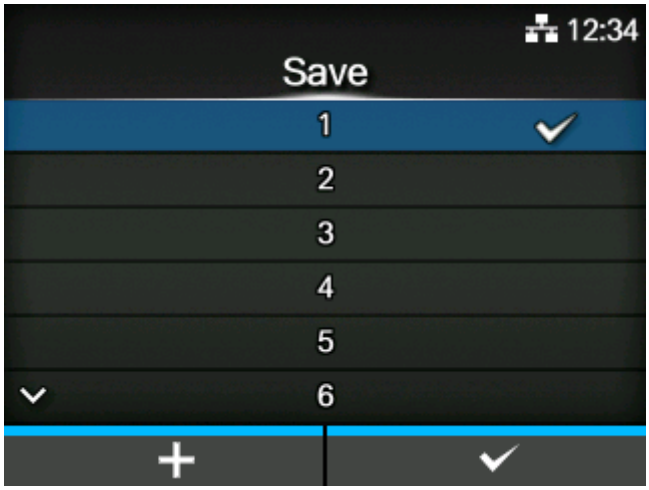

Save the current product settings as a new profile.

The screen shows a list of the profiles saved in the product. If no profile is saved, the screen shows an empty list.

To save the current product settings as a new profile, press the button and enter the name of the profile.

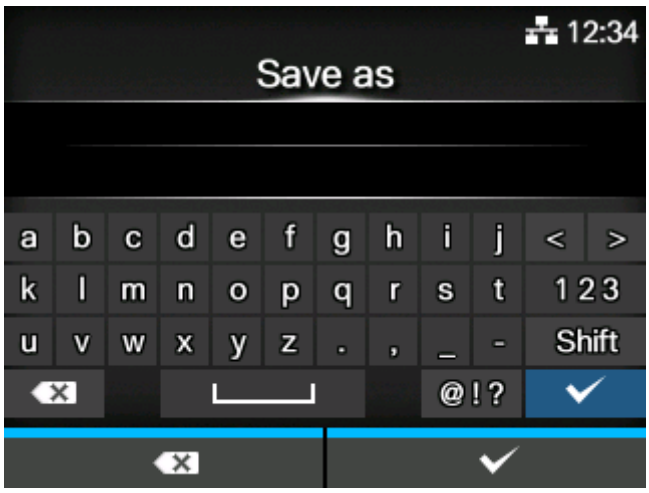

You can enter a maximum of 32 characters. You can use letters (upper and lower case), numbers and symbols.

Press the button to confirm.

The new profile name appears on the list and is loaded.

[Start with]

Select the profile to be loaded at product startup.

The procedure to load the profile at product startup is as follows:

1. Select the profile to be loaded at product startup using the / buttons.
2. Press the button or the button to confirm.

[Certificates]

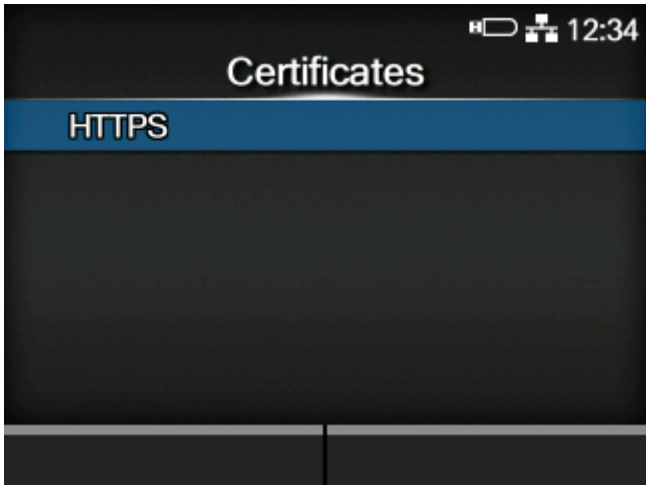

Install certificates used for HTTPS.

Available only if you have installed the USB memory.

- Be sure to perform a virus check for the USB memory before connecting it to the product. SATO Corporation shall not be held responsible for any product malfunctions caused by a virus spread via USB memory.

The setting items are as follows:

HTTPS

Installs the HTTPS certificates from the USB memory.

The procedure to install the certificates is as follows:

1. Save the certificate files to the USB thumb drive memory's root folder.
   Acceptable file extensions are as follows:
   - .pem (for PEM format certificates)
2. Insert the USB memory into the USB connector (Type A).
3. Go to the [Settings] > [Tools] > [Certificates] menu.
4. Select the certificate you want to install. Refer to the item description above.

5. Select the certificate file from the list.

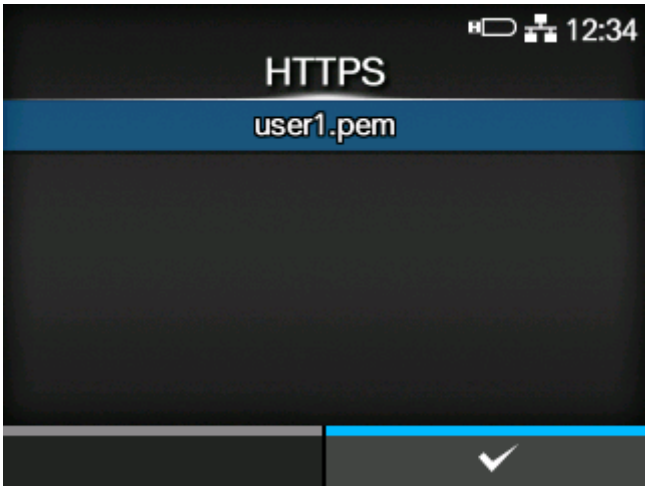

[Clone]

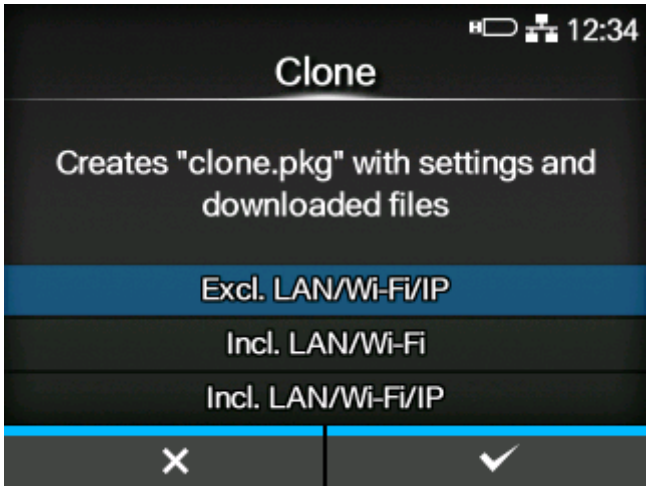

Copy the current product settings and the installed data to the USB memory.

Available only if you have installed the USB memory.

- Be sure to perform a virus check for the USB memory before connecting it to the product. SATO Corporation shall not be held responsible for any product malfunctions caused by a virus spread via USB memory.

This function is useful to transfer the settings of a product you are replacing to continue using them in a new product, or if you are setting up multiple products with the same settings.

The options are as follows:

Excl. LAN/Wi-Fi/IP

Copy the product settings and data, excluding network information, to the USB memory. This is useful when you set up multiple products, that are already connected to a network, with the same settings.

Incl. LAN/Wi-Fi

Copy the product settings and data, including network information (excluding the IP address), to the USB memory. This is useful when you set up multiple products to be connected to the same network with the same settings.

Incl. LAN/Wi-Fi/IP

Copy the product settings and data, including network information (including the IP address), to the USB memory. This is useful when transferring the settings of a product you are replacing to continue using them in a new product.

[Support Info]

Save various information about the product, such as attached options, serial number, application versions and settings configuration, in a text file (.txt) to the USB memory.

Available only if you have installed the USB memory.

- Be sure to perform a virus check for the USB memory before connecting it to the product. SATO Corporation shall not be held responsible for any product malfunctions caused by a virus spread via USB memory.

By selecting [Support Info] and pressing the button, the support information is saved to the USB memory.

After saving is complete, the saved location is displayed.

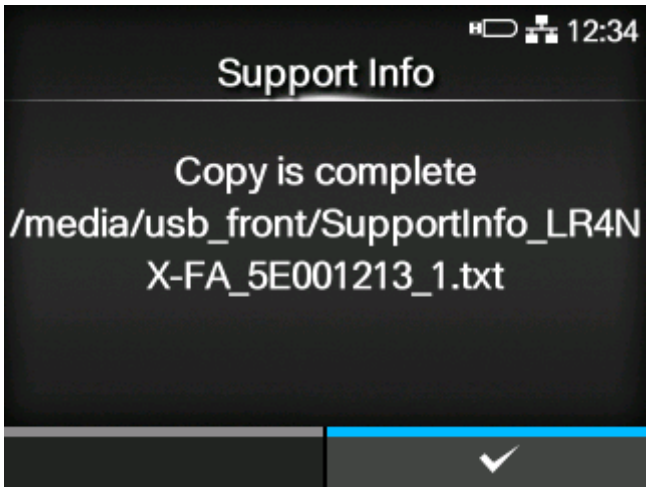

Press the button to complete.

[Startup Guide]

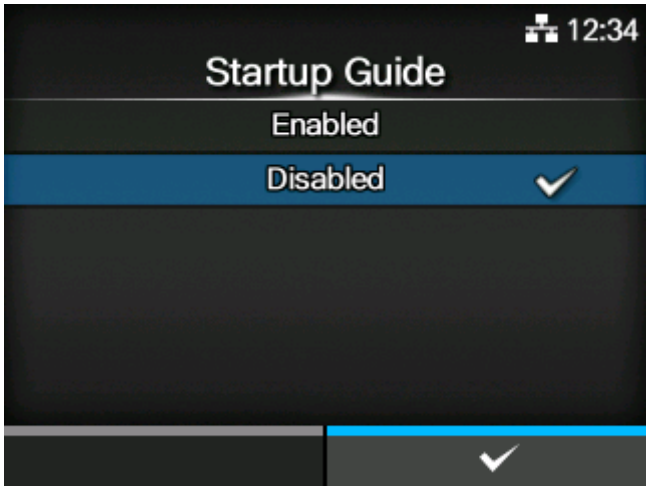

The startup guide is a function to help you through the initial product settings (such as setting date and time, and loading the ribbon and media).

Enable or disable the startup guide.

The options are as follows:

Enabled

Enable the startup guide.

Disabled

Disable the startup guide.

If you have selected [Enabled], the startup guide appears when you power on the product.

- The [Startup Guide] is set to [Disabled] in the initial settings. If you want to easily do the product's basic settings, set [Enabled] and then turn the product's power off and then on again.
- You can set the date and time only if you have installed the optional calendar's battery.

[Information] Menu

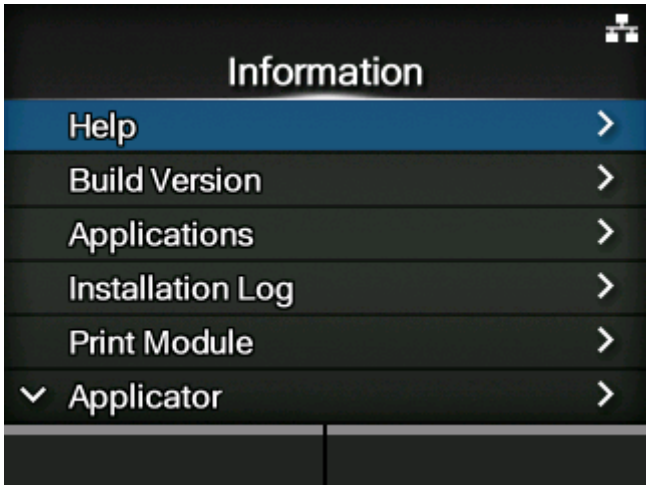

The following settings are available in the [Information] menu:

Help

Shows the guidance video.

Build Version

Shows the firmware version.

Applications

Shows various application versions.

Installation Log

Shows the installation log data.

- Appears only if there is log data in the product.

Print Module

Shows the print module information.

Applicator

Shows information about the applicator.

Counters

Shows the counter information.

IPv4 Address

Shows the IPv4 address.

IPv6 Address

Shows the IPv6 address.

LAN MAC

Shows the MAC address of the LAN.

- Appears only if the LAN interface is selected.

[Help]

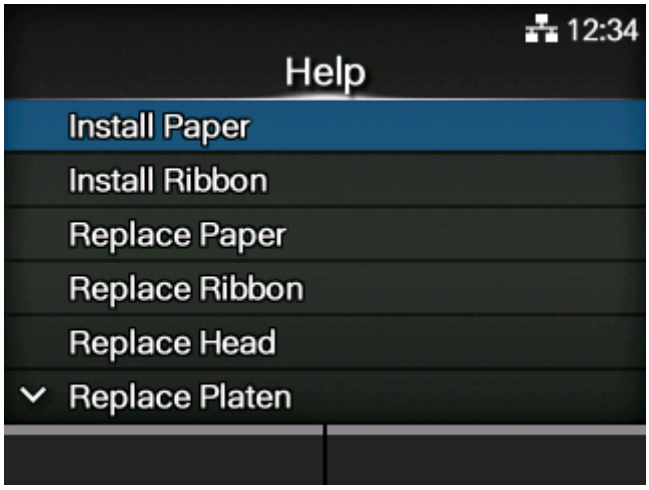

Shows the guidance video.

You can view the video for loading the media and ribbon, the cleaning method and replacement method of consumables.

The list of videos are as follows:

Install Paper

Shows the video for loading the media.

Install Ribbon

Shows the video for loading the ribbon.

Replace Paper

Shows the video for replacing the media.

Replace Ribbon

Shows the video for replacing the ribbon.

Replace Head

Shows the video for replacing the print head.

Replace Platen

Shows the video for replacing the platen roller.

Replace Nip roller

Shows the video for replacing the nip roller.

Replace Pressure nip roller

Shows the video for replacing the pressure nip roller.

Cleaning (print head)

Shows the video for cleaning the print head.

Cleaning (platen rolller)

Shows the video for cleaning the platen roller.

Cleaning (Pressure nip roller)

Shows the video for cleaning the pressure nip roller.

Cleaning (paper & ribbon path)

Shows the video for cleaning the routes for the media and ribbon.

[Build Version]

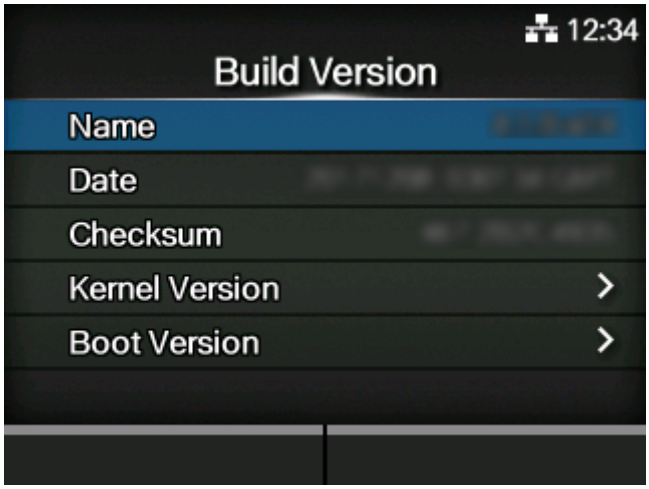

Shows the information and version of the product.

Name

Shows the name of the build version.

Date

Shows the build date.

Checksum

Shows the checksum of the build version.

Kernel Version

Shows the kernel version.

Boot Version

Shows the boot version.

[Kernel Version]

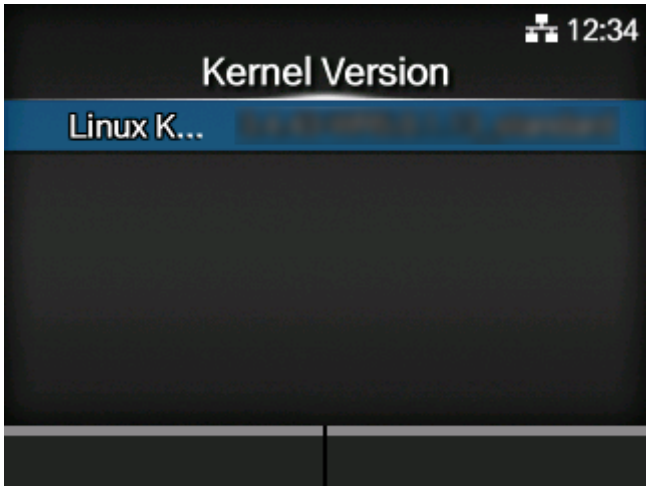

Shows the kernel version of the product.

[Boot Version]

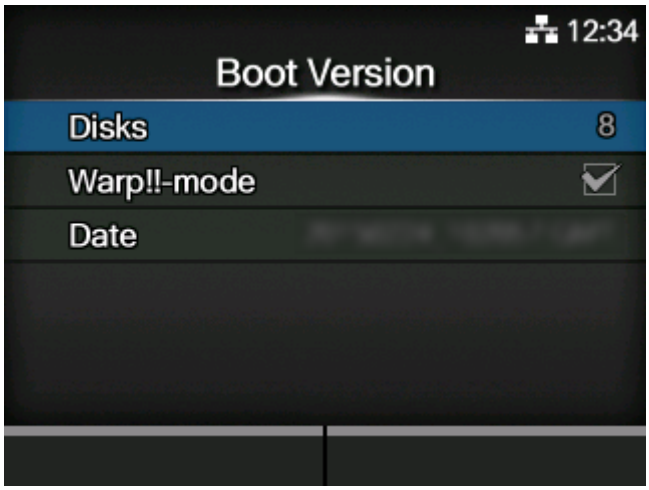

Shows the boot version of the product.

The items are as follows:

Disks

Shows the Disks.

Warp!!-mode

A checked box means enabled. An unchecked box means disabled.

Date

Shows the build date of the boot version.

[Applications]

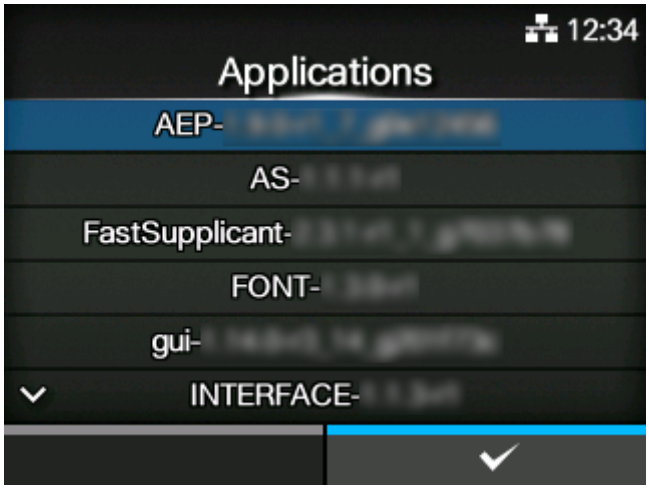

Shows the versions of the applications installed in the product, such as printer languages.

[Installation Log]

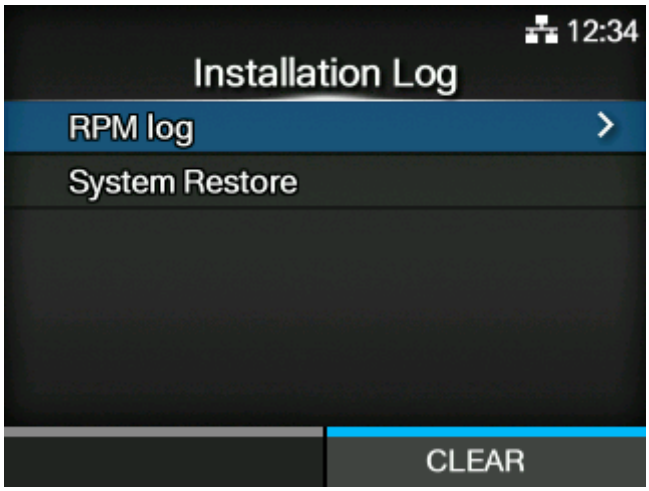

Show or clear the installation log data in the product.

The setting items are as follows:

RPM log

Shows the RPM log data.

System Restore

Shows the system restore log data.

Press the button (CLEAR) to clear the selected log data.

- This screen does not appear if there is no log data in the product.

[RPM log]

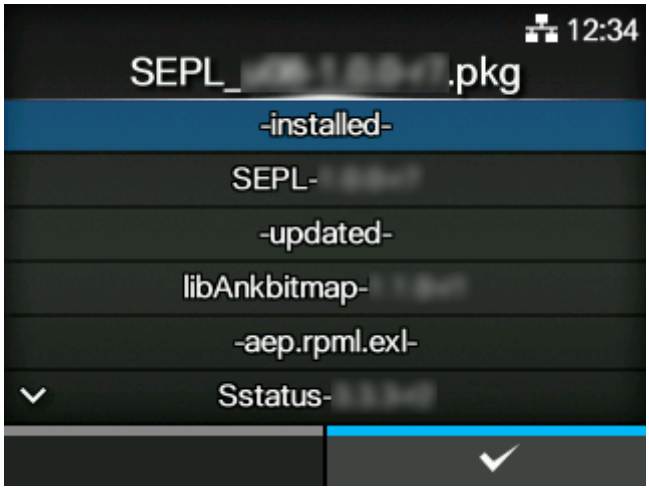

Shows a list of RPM log files containing three sections: installed, updated and obsolete.

The RPM log file is created after installing a pkg-file containing rpm-files.

[System Restore]

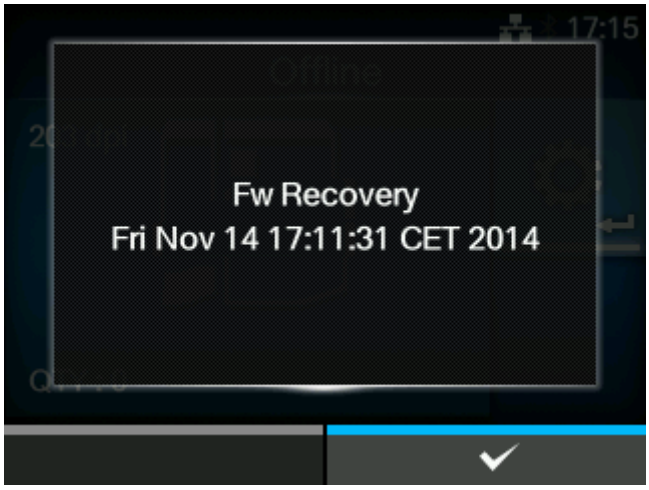

Shows the system restore log.

The system restore log file is created after installing a pkg-file that caused a state in which the product's operator panel cannot be operated.

[Print Module]

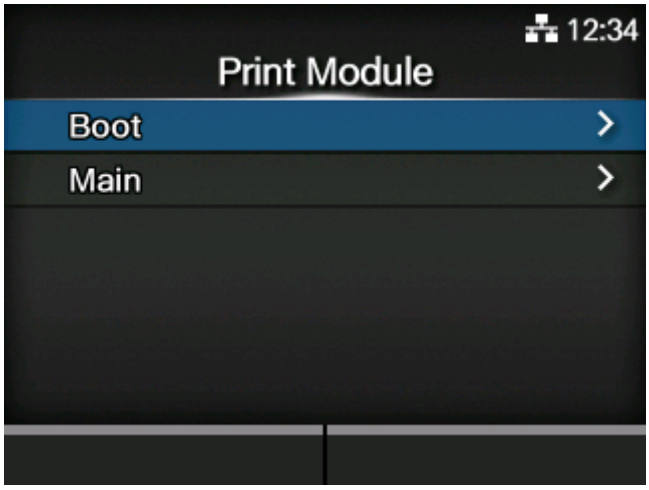

Shows information about the print module on the product.

The items are as follows:

Boot

Shows the Boot firmware version.

Main

Shows the Main firmware version.

[Boot]

Name

Shows the Boot firmware version.

Release Date

Shows the Boot firmware release date.

Checksum

Shows the Boot firmware checksum.

[Main]

Name

Shows the Main firmware version.

Release Date

Shows the Main firmware release date.

Checksum

Shows the Main firmware checksum.

[Applicator]

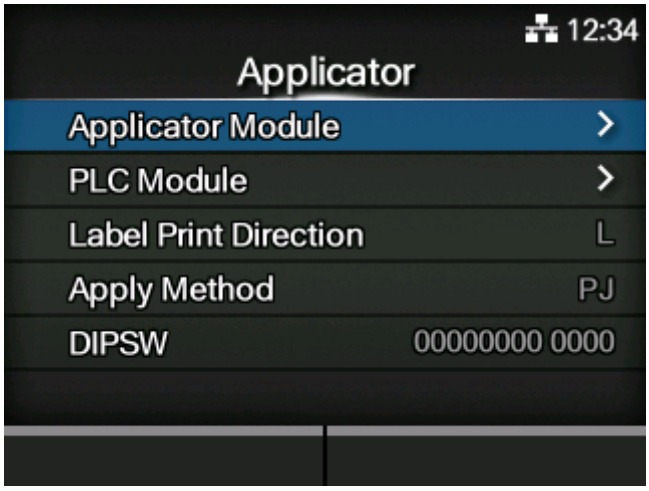

Shows information about the applicator on the product.

The items are as follows:

Applicator Module

Shows the version of the applicator module's firmware.

PLC Module

Shows the version of the PLC module's firmware.

Label Print Direction

Shows the direction the media is feeding.

Apply Method

Shows the application method that is set.

DIPSW

Shows the state of the DIP switches.

[Applicator Module]

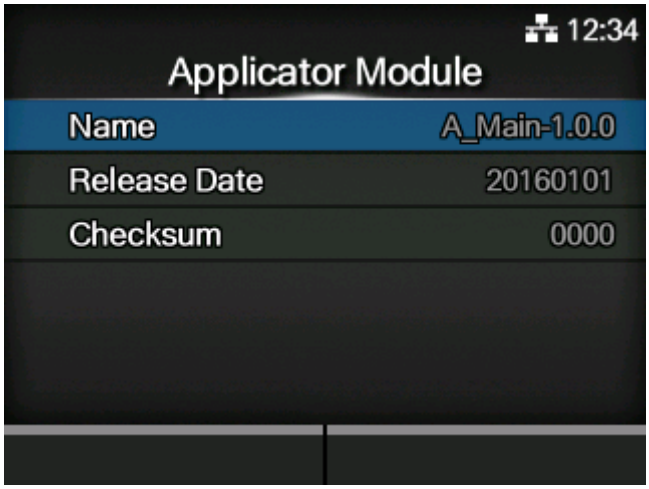

Name

Shows the version of the applicator module's firmware.

Release Date

Shows the release date of the applicator module's firmware.

Checksum

Shows the checksum of the applicator module's firmware.

[PLC Module]

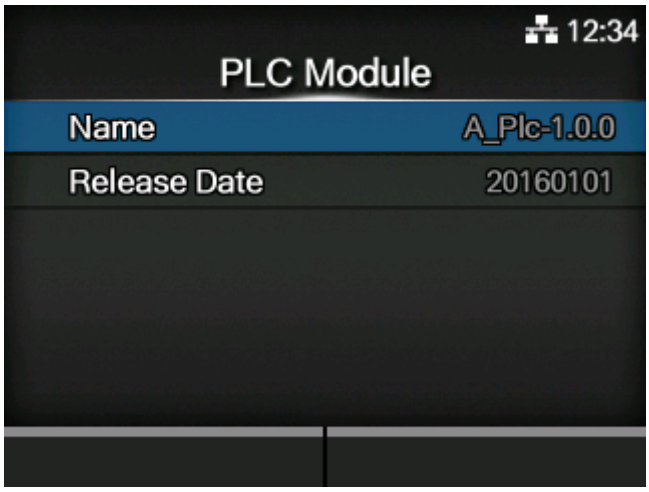

Name

Shows the version of the PLC module's firmware.

Release Date

Shows the release date of the PLC module's firmware.

[Label Print Direction]

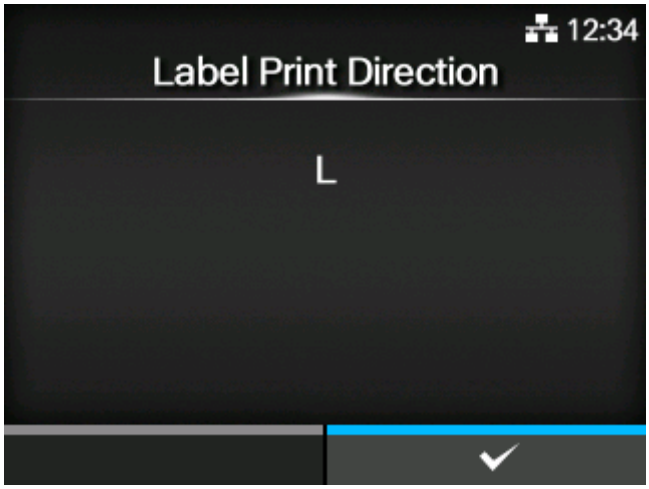

Shows the direction the media is feeding through the product.

[Apply Method]

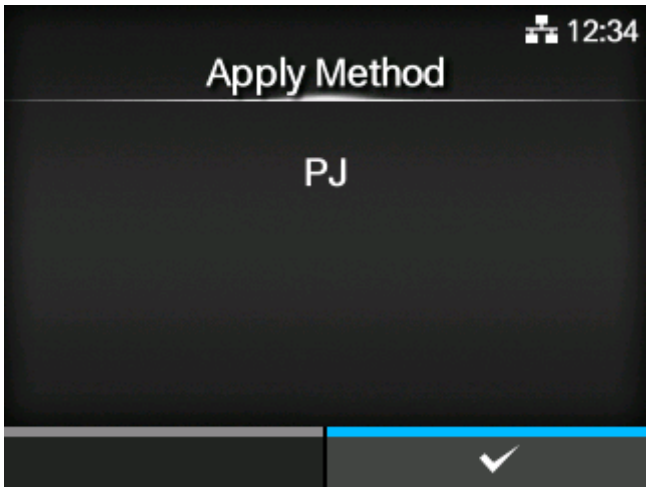

Shows the application method that is set.

[DIPSW]

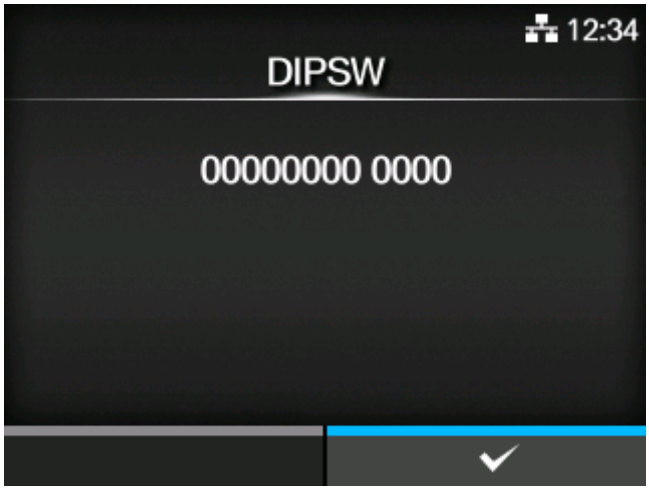

Shows the state of the applicator's DIP switches.

- 0: OFF
- 1: ON

[Counters]

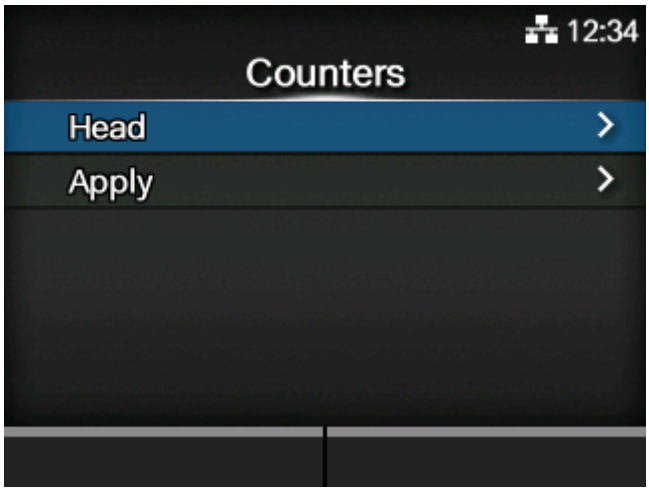

Shows information about the counters on the product.

The setting items are as follows:

Head

Shows information about the head counter on the product.

Apply

Shows information about the applicator's counter on the product.

[Head]

Shows information about the head counter on the product.

Life

Shows the current print distance.

Head 1

Head 2

Head 3

The current print distance is shown in [Head 1]. When you replace the print head and the counter is cleared, the value of [Head 2] appears in [Head 3] and the value of [Head 1] appears in [Head 2]. [Head 1] will start to count from 0 again.

[Apply]

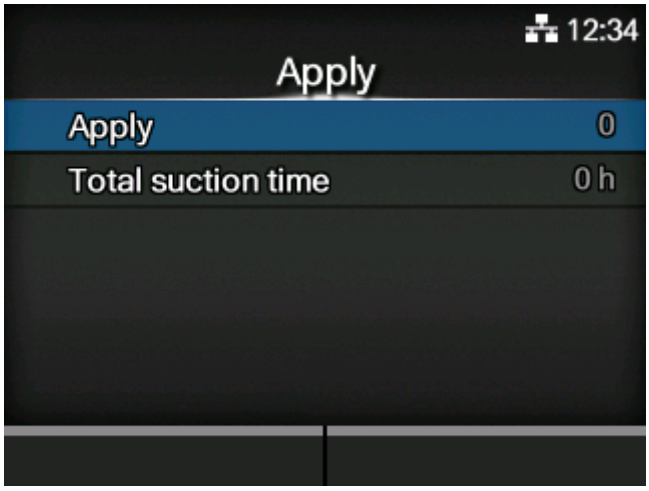

Shows information about the applicator's counter on the product.

Apply

Shows the current total number of applications.

Total suction time

Shows the current total amount of suction time.

[IPv4 Address]

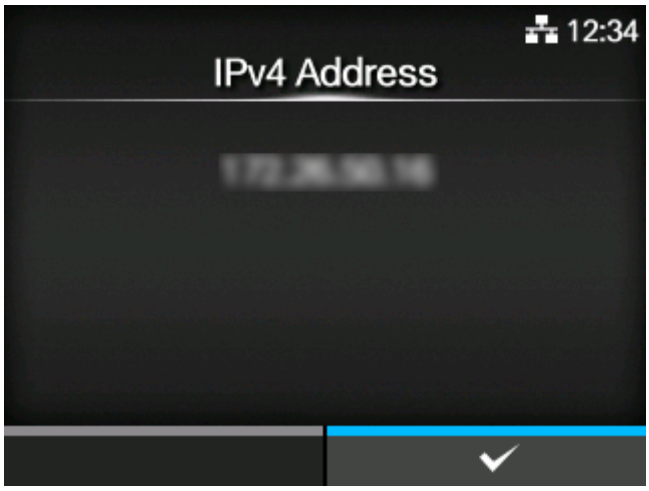

Shows the IPv4 address.

[IPv6 Address]

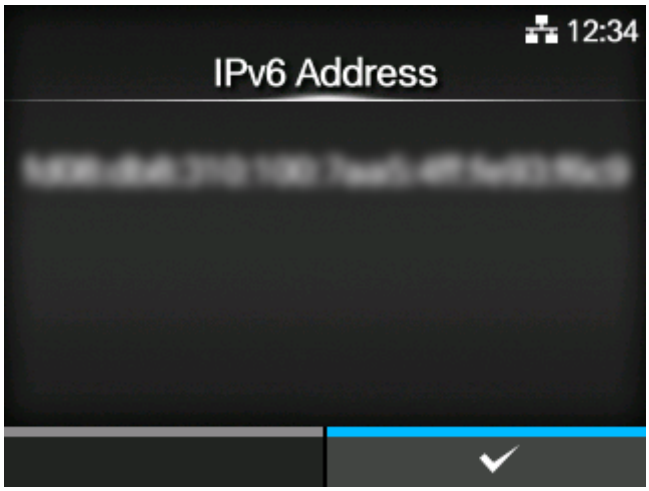

Shows the IPv6 address.

[LAN MAC]

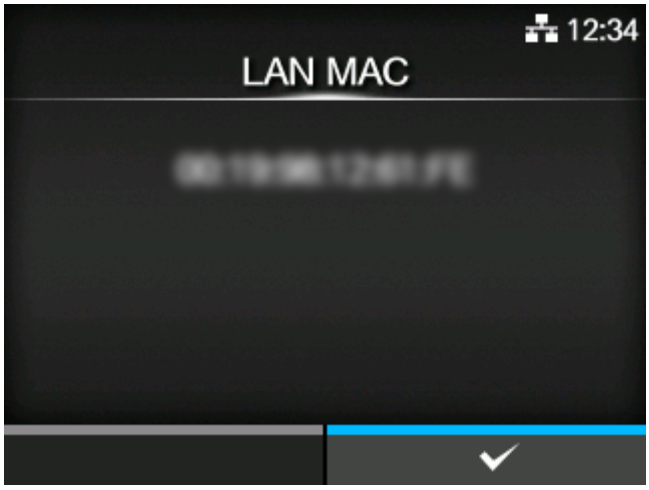

Shows the MAC address of the LAN.

Appears only if LAN is the active interface.

Configuring the Product Settings from a Web Browser

Accessing to the Web Configuration Page

The product can be operated through a web configuration page using any browser.

With an Ethernet LAN connection, users can remotely get information from the product or configure the product's settings.

- You need the product's IP address to access the web configuration page. The product's IP address can be checked in [Settings] > [Information] > [IPv4 Address].

1. Open up the browser and enter the product's URL.

If the product's IP address is 192.168.143.123, enter the following URL: https://192.168.143.123

When a security certificate is prompted, you must acknowledge and click Continue.

The web configuration page for the product appears. On the upper right (1) of each page, the model name, current resolution and MAC address are shown.

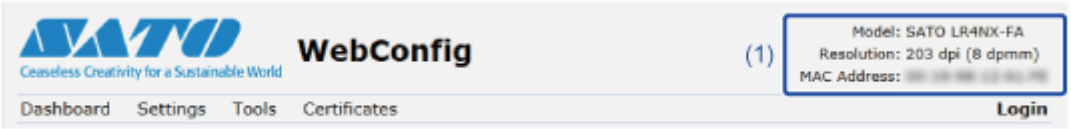

2. Log in to view the [Settings] and [Tools] pages.

You can view [Dashboard] and [Certificates] pages without logging in.

a. Click [Login] (2).

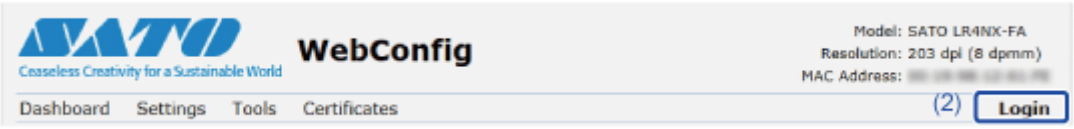

b. Select [settings] for the user, enter the password, and click [Login].

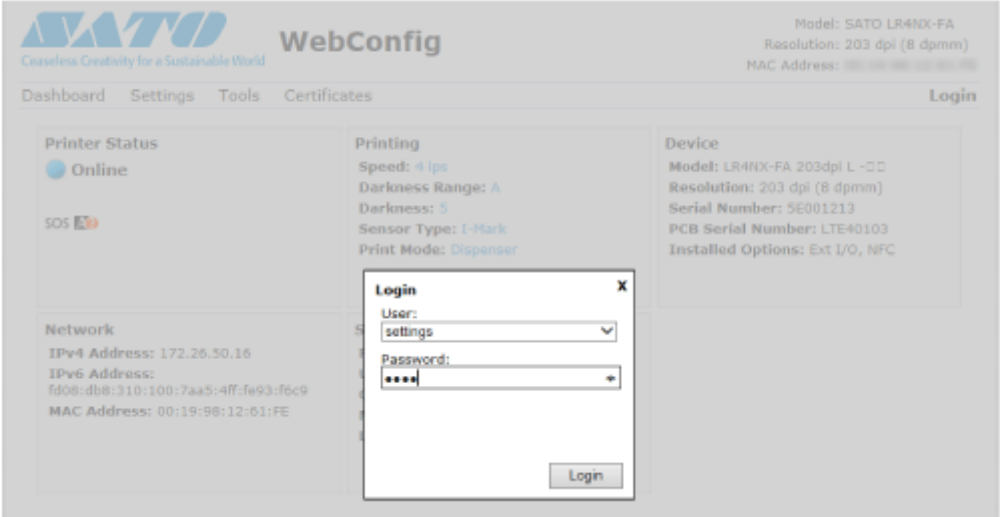

The default user is [settings], and the default password is "0310".

3. Click on the page (3) you want to view.

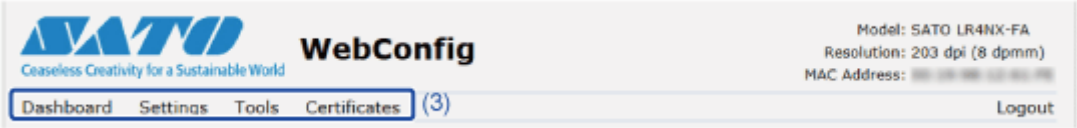

Dashboard

[Dashboard] is the initial page for the web configuration page. Each section shows specific information or the current status of the product.

- You can view the [Dashboard] page without logging in.

(1) [Printer Status]

Shows the current state (online, offline, error) and current status icons.

(2) [Printing]

Shows the print speed, darkness, sensor, print mode and backfeed setting.

(3) [Device]

Shows the model, current resolution and options that are installed.

(4) [Network]

Shows the current IP address and MAC address of the active interface.

(5) [System]

Shows the current firmware version, uptime, SNMP contact, name and location.

Settings

Settings equivalent to the product's Settings mode can be done on the browser.

- Login is required to view the [Settings] page. Click [Login] to log in before opening the [Settings] page.

  The default user is [settings], and the default password is "0310".

(1) [Printing]

You can do the settings equivalent to [Settings] > [Printing] in the Settings mode.

(2) [Interface]

You can do the settings equivalent to [Settings] > [Interface] in the Settings mode.

(3) [Applications]

You can do the settings equivalent to [Settings] > [Applications] in the Settings mode.

(4) [System]

You can do the settings equivalent to [Settings] > [System] in the Settings mode.

(5) [Tools]

You can do the settings equivalent to [Settings] > [Tools] in the Settings mode.

(6) [Information]

You can do the settings equivalent to [Settings] > [Information] in the Settings mode.

The screen below is the example of [Printing] page.

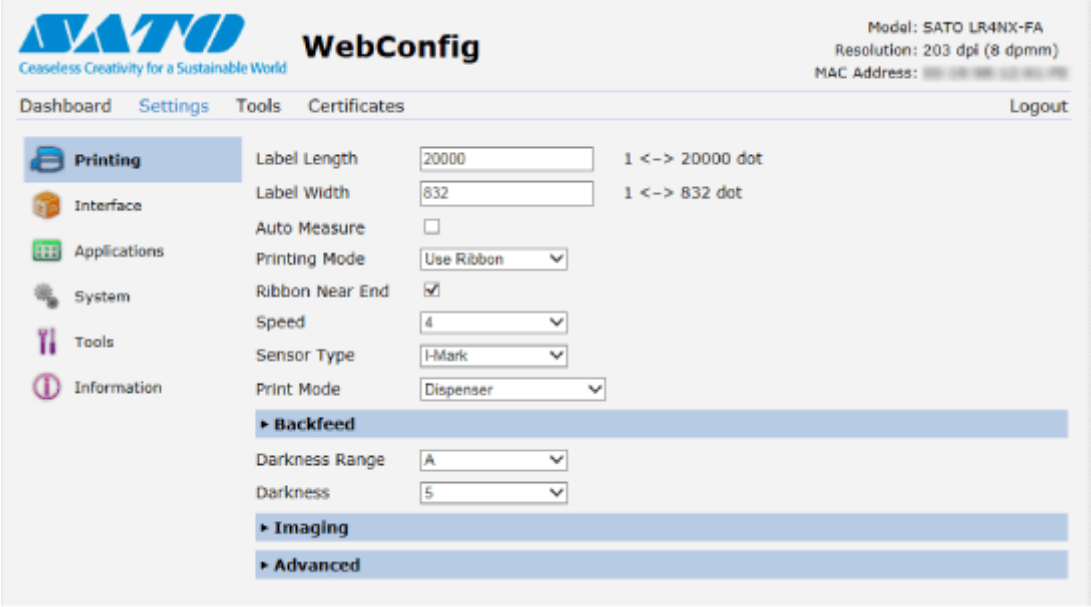

- If a message prompting you to restart the product appears at the top of the page, click [Reboot printer] to reboot the product to apply the settings.

Tools

Various settings and operations can be performed in this page: installing certificates for authentication, checking the log, and test printing.

- Login is required to view the [Tools] page. Click [Login] to log in before opening the [Tools] page.

  The default user is [settings], and the default password is "0310".

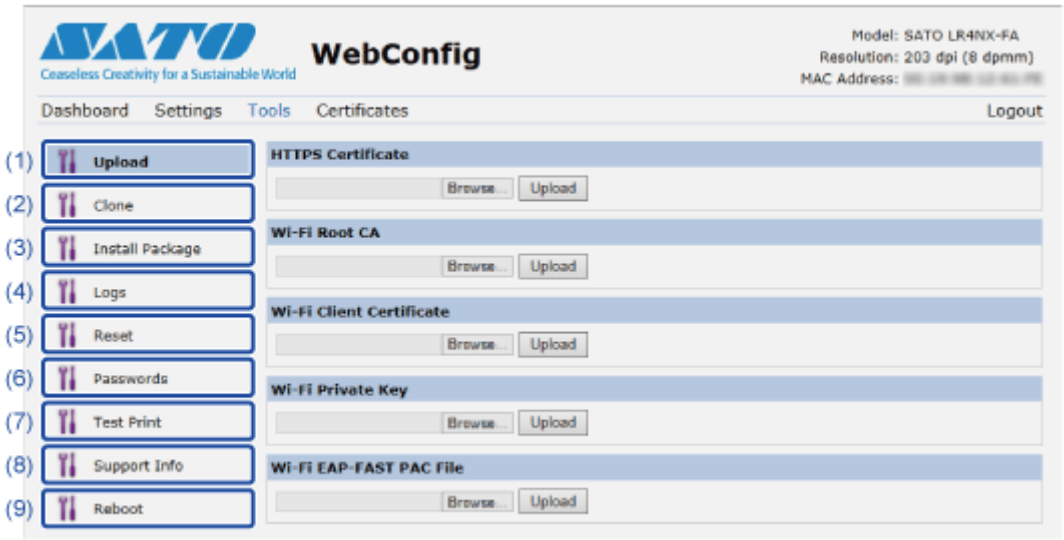

(1) [Upload]

You can do the setting equivalent to [Settings] > [Tools] > [Certificates] in the Settings mode. Install certificates used for HTTPS.

Click [Browse] of the certificate you want to install.

Select the certificate file from the list and click [Upload], and the authentication file will be installed.

- The product does not support the Wi-Fi related items.

(2) [Clone]

You can do the setting equivalent to [Settings] > [Tools] > [Clone] in the Settings mode. Copy the current product settings and the installed data.

(3) [Install Package]

Refer to “Section 2.5 Downloading Firmware” of the LR4NX-FA service manual.

(4) [Logs]

List all log files in the log directory. Users can click to download the file.

(5) [Reset]

You can do the setting equivalent to [Settings] > [Tools] > [Reset] in the Settings mode. Initialize the setting values and data saved on the product.

(6) [Passwords]

You can do the setting equivalent to [Settings] > [System] > [Password] > [Change Password] in the Settings mode. Change the passwords for the product.

(7) [Test Print]

You can do the setting equivalent to [Settings] > [Tools] > [Test Print] in the Settings mode. Perform a test print.

(8) [Support Info]

You can do the setting equivalent to [Settings] > [Tools] > [Support Info] in the Settings mode. You can also get screenshots of the display and an image of the last label printed.

(9) [Reboot]

Restarts the product.

Certificates

Shows the root certificate authority and client certificates installed on the product.

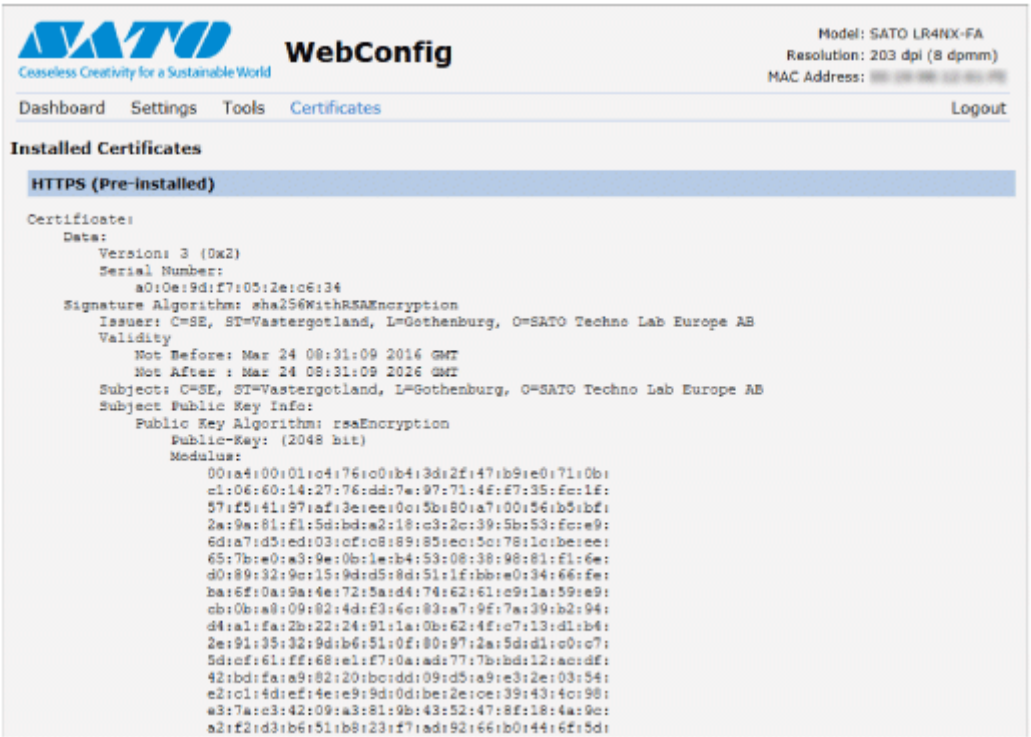

- The client certificate that is a PFX (PKCS #12) file will not be shown.

Various Ways to Output

Outputting with General-purpose Software

Labels can be easily output by using software, such as the NiceLabel series.

- NiceLabel series

  This software has multiple functions and is easy to operate so you can create and print labels with richly versatile layouts.

- For details of the products, contact your SATO sales representative.

Outputting and Controlling with Dedicated Command

A variety of labels can be printed from simple formats to complex formats by sending the SBPL (Sato Barcode Printer Language) command to the product.

In addition, you can print characters, barcodes, and graphics in various styles by combining multiple SBPL commands. There are many functions for modifying the printed items, such as enlarging fonts, specifying a print direction, ruled line, and black and white reverse printing.

For programming references, contact your SATO sales representative or technical support center.

Adjusting the Product

Printable Area

The printable area of the product is as follows:

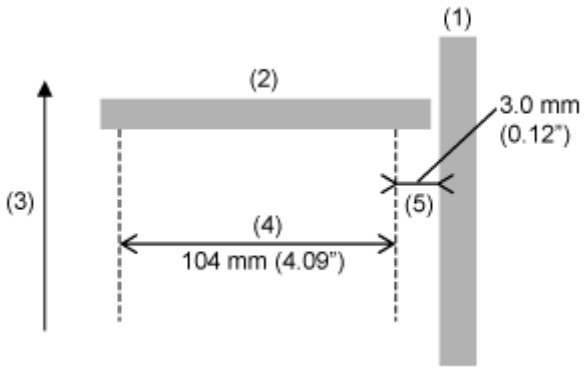

(1) Frame

(2) Print head

(3) Media feed direction

(4) Printable area

(5) Non-printable area

Media Sensor Positions and Media Stop Positions

The media stop positions with the media sensor and various operation modes are as follows:

- **For left-hand type**

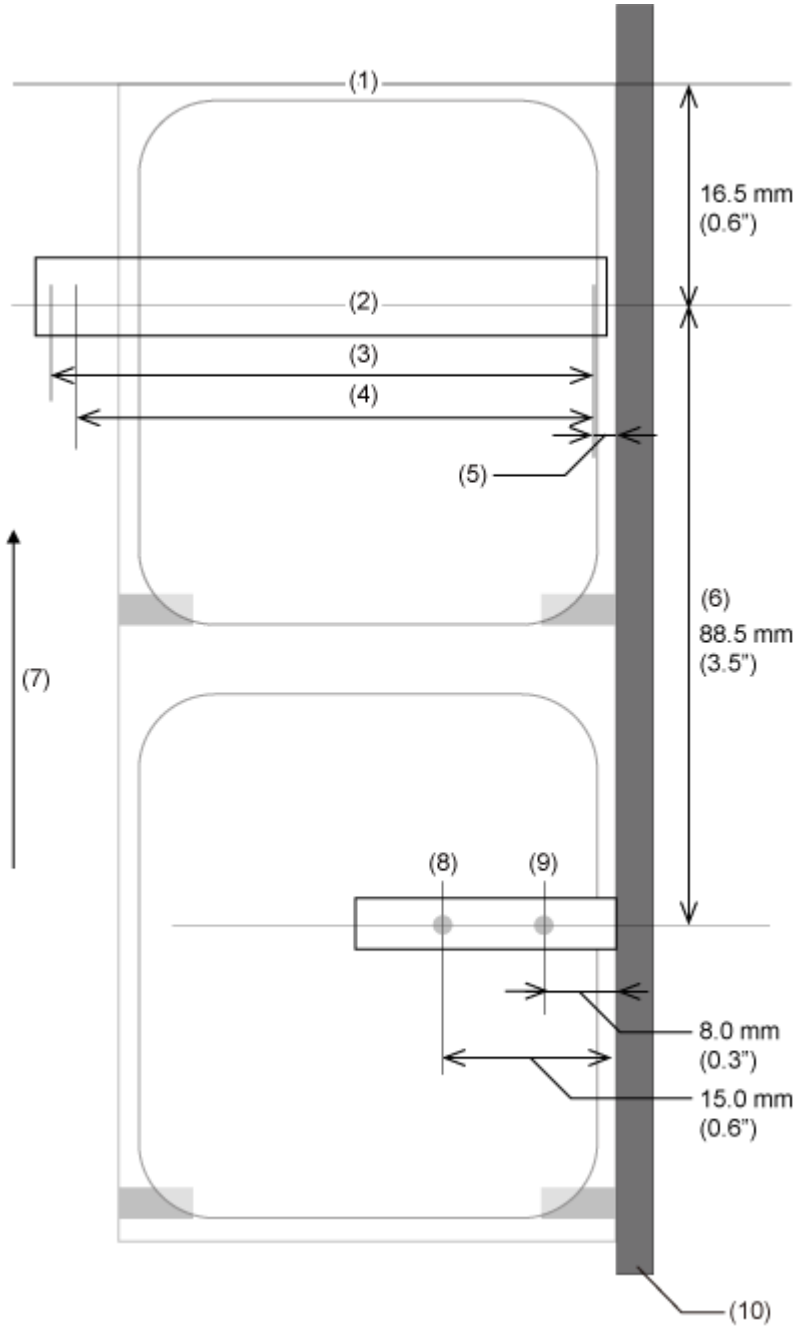

- **For right-hand type**

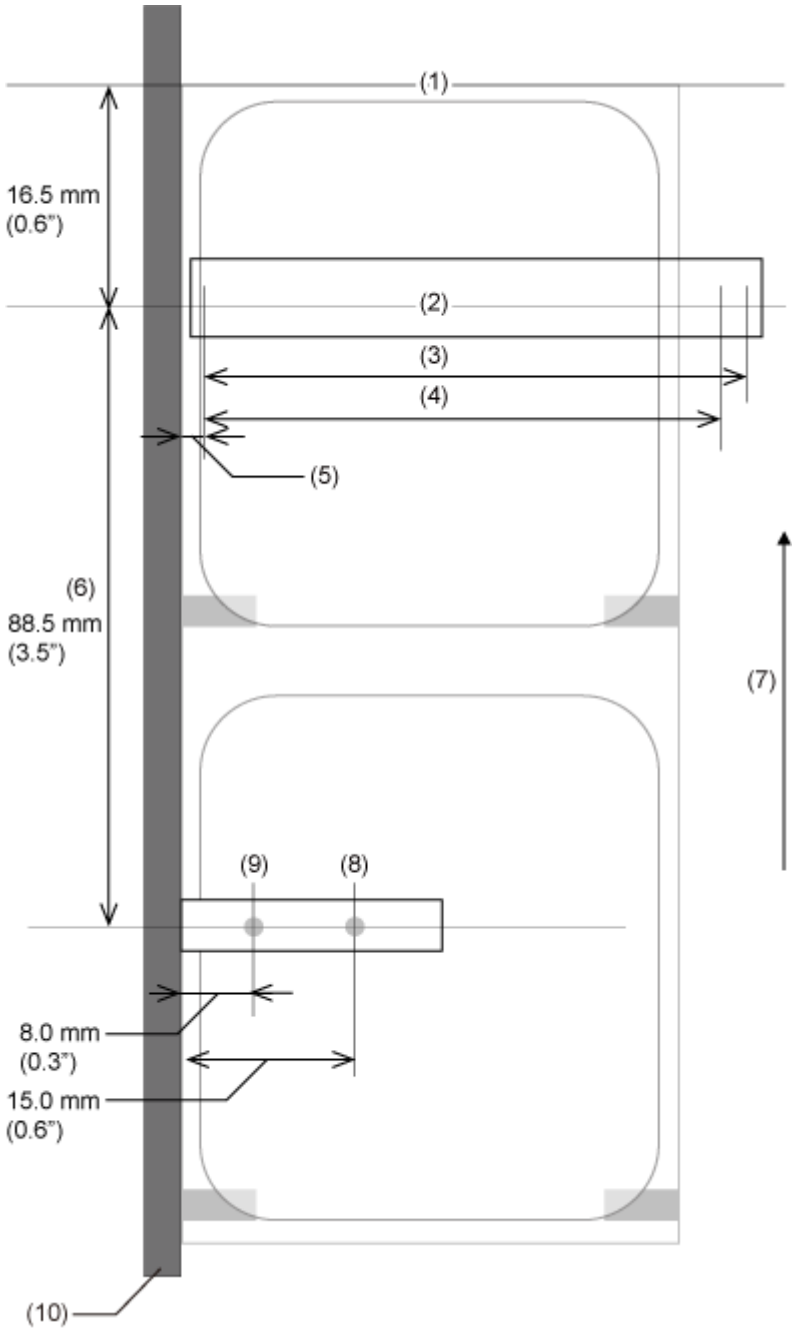

(1) Media stop position in dispenser mode

(2) Print head

(3) Head width

(4) Printable width

(5) Non-printable zone (3.0 mm / 0.12")

(6) Distance between print head and media sensor

(7) Media feed direction

(8) Gap sensor

(9) I-mark sensor

(10) Frame

Adjusting the Base Reference Point

About the Base Reference Point

The base reference point is the point at which one determines the print position and stop/dispensing position.

The base reference point differs depending on the operation mode or media sensor you use.

Continuous mode

I-mark label	Gap label
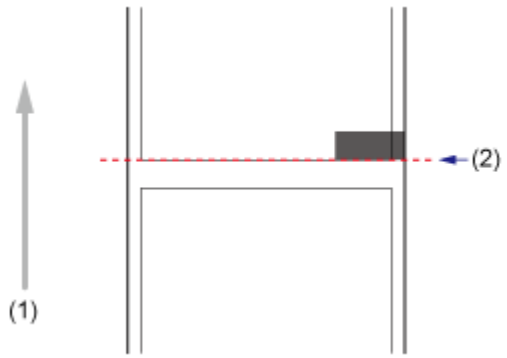 (1) Feed direction (2) Print and stop position	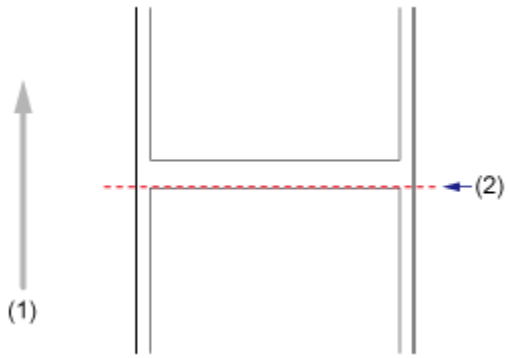 (1) Feed direction (2) Print and stop position

Dispense mode (no backfeed)

I-mark label	Gap label
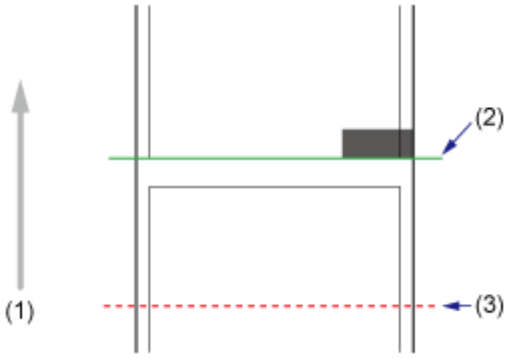 (1) Feed direction (2) Dispensing position (3) Print position	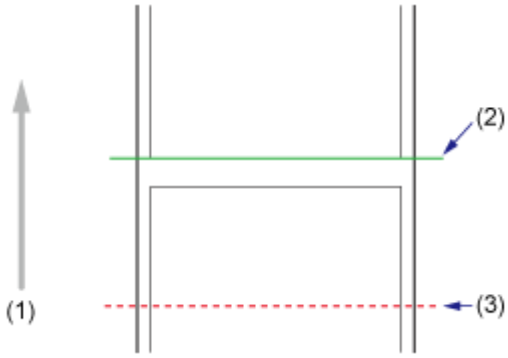 (1) Feed direction (2) Dispensing position (3) Print position

Dispense mode (with backfeed)

I-mark label	Gap label
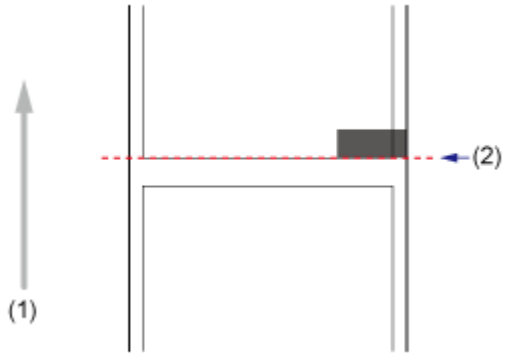 (1) Feed direction (2) Print and dispensing position	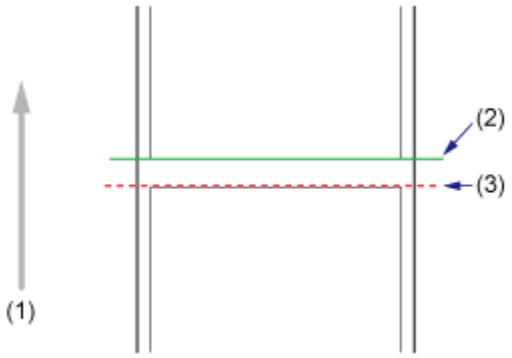 (1) Feed direction (2) Dispensing position (3) Print position

Adjusting the Print Position

Set the [Pitch] in the [Printing] > [Advanced] > [Adjustments] menu to adjust the print position.

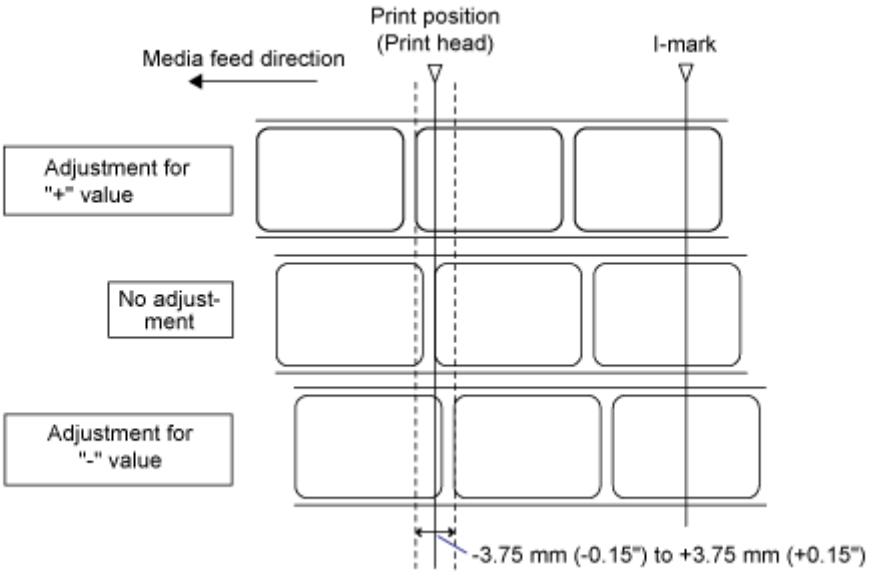

- The above reference position (print position) is the stop position when the media sensor is using I-marks.

1. **When the product is in Online mode, press the button on the operator panel to change to Offline mode.**

2. **Press the button to show the [Settings] menu.**

3. Select [Printing] using the ◀ / ▶ buttons, and then press the ↵ button.

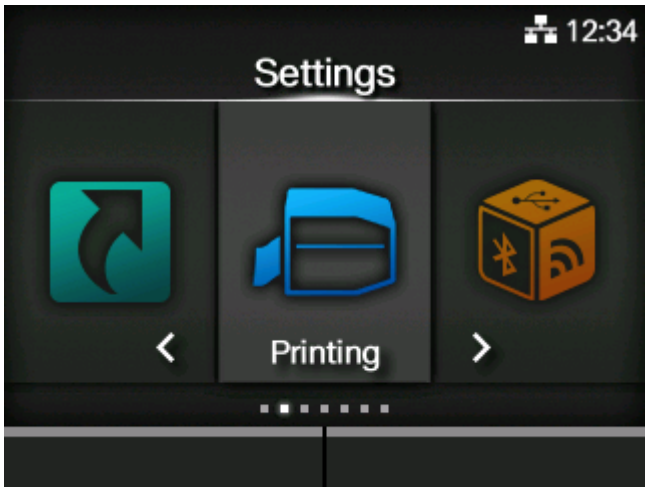

4. Select the [Advanced] > [Adjustments] > [Pitch] menu using the ▲ / ▼ buttons, and then press the ↵ button.

The [Pitch] screen appears.

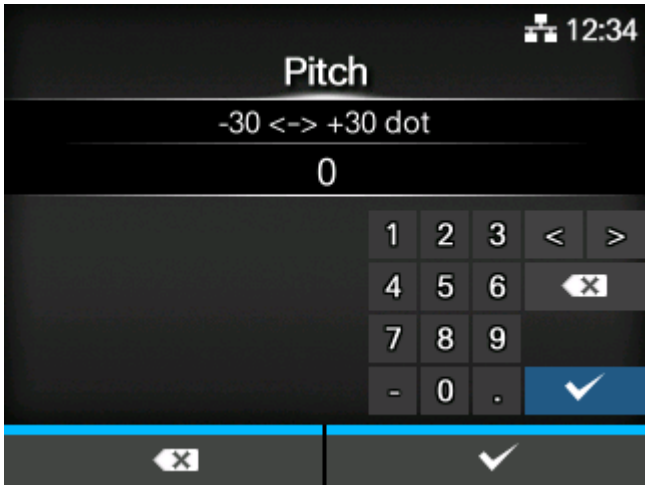

5. Change the setting value. Press the ◀ / ▶ / ▲ / ▼ buttons to select a number and then press the ↵ button to enter the number to the text box.

The setting range is as follows:

Resolution	Setting range
203 dpi (1 dot = 0.125 mm (0.0049"))	-30 to +30 dots
305 dpi (1 dot = 0.083 mm (0.0033"))	-45 to +45 dots

6. Press the button to save the setting value.

7. **Press the button to change to Offline mode.**

8. **Press the button again to change to Online mode.**

   You can print to check the adjusted print position.

Adjusting the Dispenser Stop Position

Set the [Offset] in the [Printing] > [Advanced] > [Adjustments] menu to adjust the dispenser stop position.

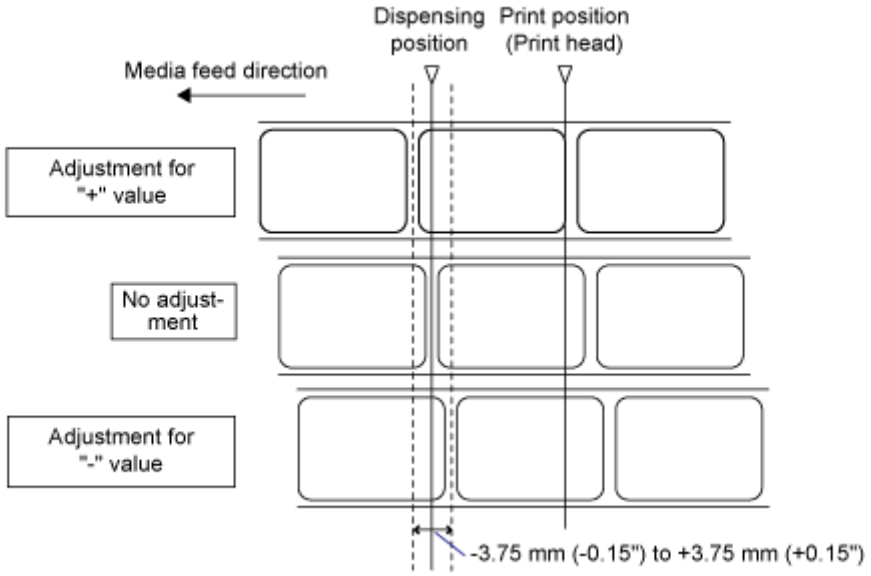

- The above dispenser stop position indicates the stop position when the media sensor is using I-marks.

1. **When the product is in Online mode, press the button on the operator panel to change to Offline mode.**

2. **Press the button to show the [Settings] menu.**

3. **Select [Printing] using the ◀ / ▶ buttons, and then press the ↵ button.**

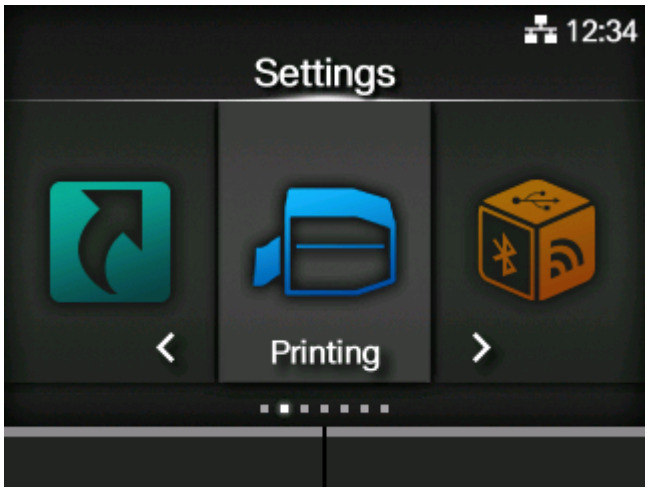

4. **Select the [Advanced] > [Adjustments] > [Offset] menu using the ▲ / ▼ buttons, and then press the ↵ button.**

The [Offset] screen appears.

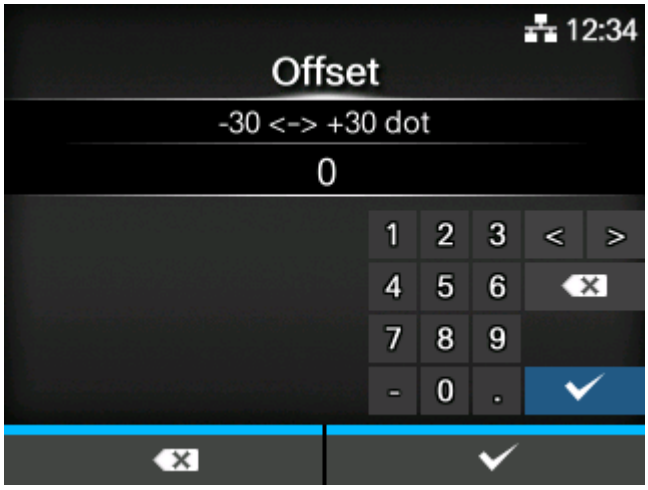

5. **Change the setting value. Press the ◀ / ▶ / ▲ / ▼ buttons to select a number and then press the ↵ button to enter the number to the text box.**

The setting range is as follows:

Resolution	Setting range
203 dpi (1 dot = 0.125 mm (0.0049"))	-30 to +30 dots
305 dpi (1 dot = 0.083 mm (0.0033"))	-45 to +45 dots

6. **Press the button to save the setting value.**

7. **Press the button to change to Offline mode.**

8. **Press the button again to change to Online mode.**

   You can print to check the adjusted dispenser stop position.

Adjusting the Print Quality

Adjusting the Print Darkness

The adjustment procedure for the print darkness is as follows:

- You can fine tune the print darkness by setting the [Darkness Adjust] in the [Printing] > [Advanced] > [Adjustments] menu.
- When the [Printing] > [Advanced] > [Prioritize] menu has been set to [Commands], the data will be printed with the print darkness specified by command.
- When the product is in Online mode, the [Adjustments] menu will appear instead of the [Settings] menu and you can adjust the print darkness.

1. **When the product is in Online mode, press the button to change to Offline mode.**

2. **Press the button to show the [Settings] menu.**

3. Press the ◀/▶ buttons to select [Printing], and then press the ↵ button.

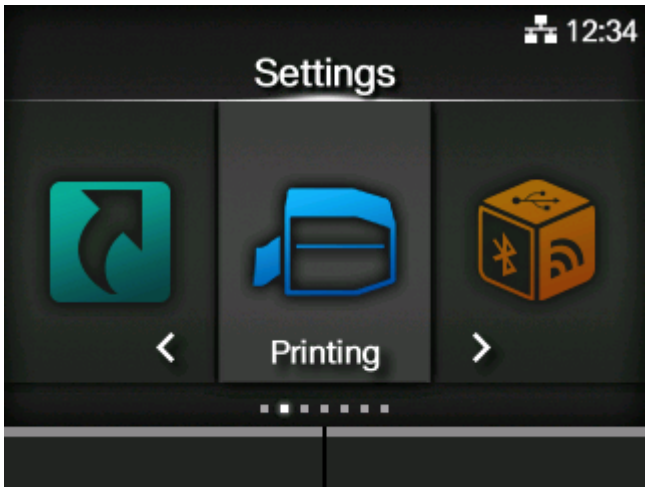

4. Press the ▲/▼ buttons to select [Darkness], and then press the ↵ button.

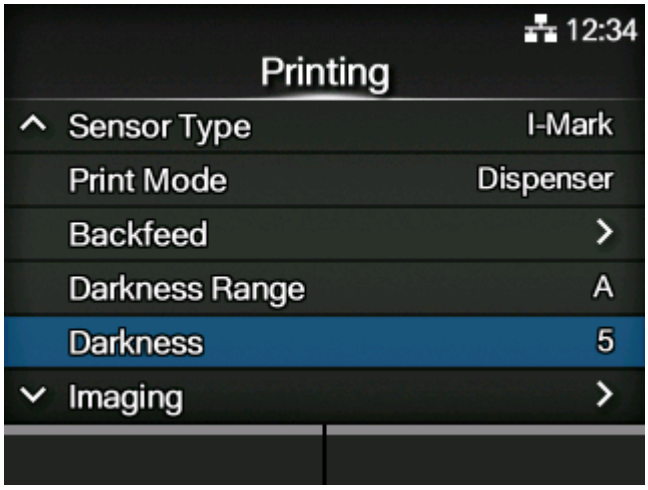

The [Darkness] screen appears.

5. Press the ▲/▼ buttons to select a value.

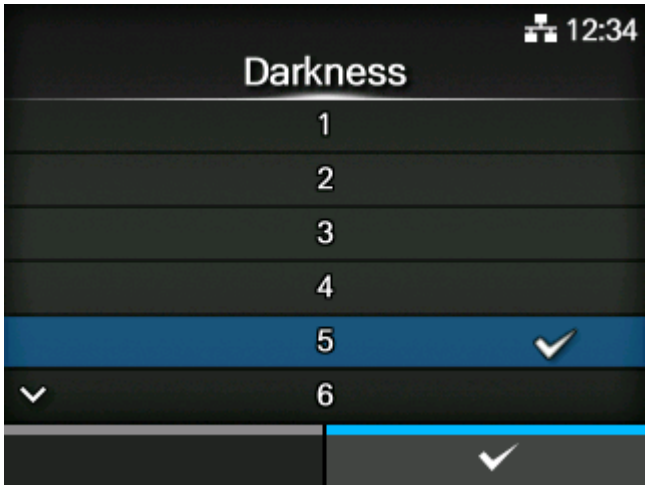

The setting range is from 1 to 10. 1 is the lightest and 10 is the darkest.

6. **Press the button or button to save the setting value.**

7. **Press the button to change to Offline mode.**

8. **Press the button again to change to Online mode.**

   You can print to check the print quality.

Adjusting the Print Speed

The adjustment of the print speed not only changes the speed of printing but also affects the print quality.

The setting range of the print speed varies depending on the following print resolution:

Resolution	Setting range
203 dpi (8 dots/mm)	2 to 10 (inches/sec) (50.8 to 254 mm/sec)
305 dpi (12 dots/mm)	2 to 10 (inches/sec) (50.8 to 254 mm/sec)

- When the [Printing] > [Advanced] > [Prioritize] menu has been set to [Commands], the data will be printed with the print speed specified by command.

1. **When the product is in Online mode, press the button to change to Offline mode.**

2. **Press the button to show the [Settings] menu.**

3. **Press the ◀/▶ buttons to select [Printing], and then press the ↵ button.**

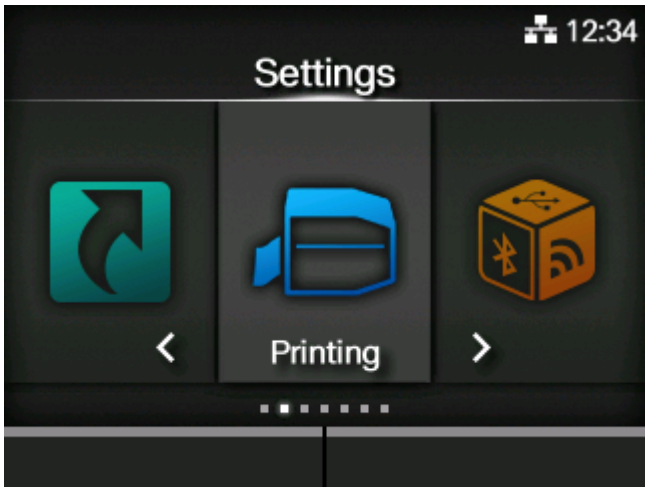

4. **Press the ▲/▼ buttons to select [Speed], and then press the ↵ button.**

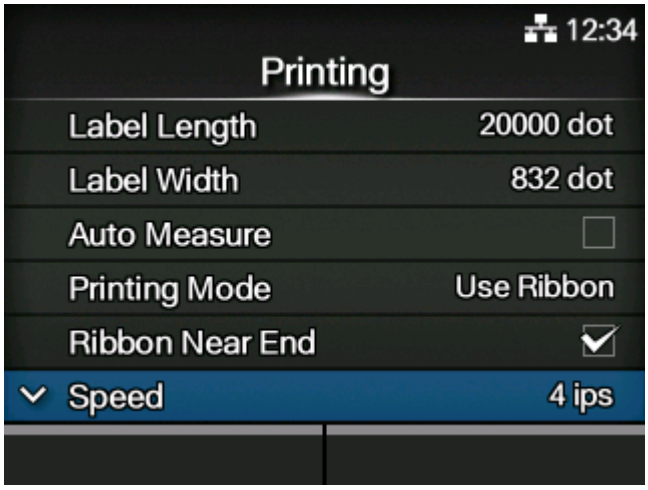

The [Speed] screen appears.

5. **Press the ▲/▼ buttons to select a value.**

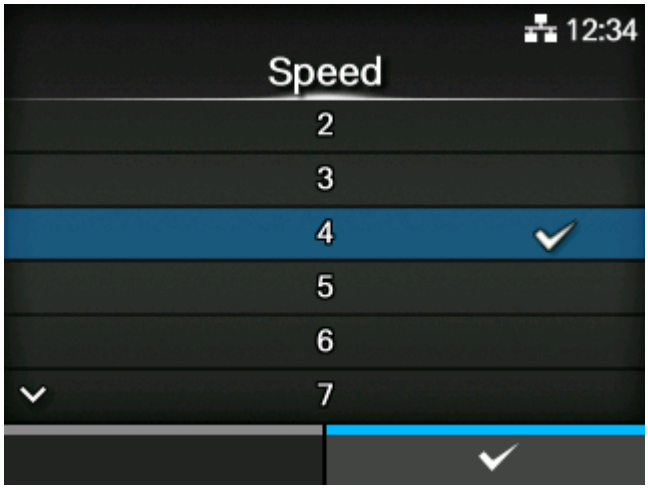

6. **Press the button or ↵ button to save the setting value.**

7. **Press the button to change to Offline mode.**

8. **Press the button again to change to Online mode.**

   You can print to check the print quality.

Workflow for Application Operations

Operation 1: Cylinder Jet (CJ) Method Application (Print and Wait/Wait at Front End)

Operation

The label that is delivered is held on the suction plate that is attached to the end of the cylinder (diagram 2). The cylinder extends to its forward end (diagram 3).

The [Activate Apply] signal (input) turns on. And then, after the application time passes, the air blows the label on (diagram 4). After the blowing time passes, the cylinder returns (diagram 5).

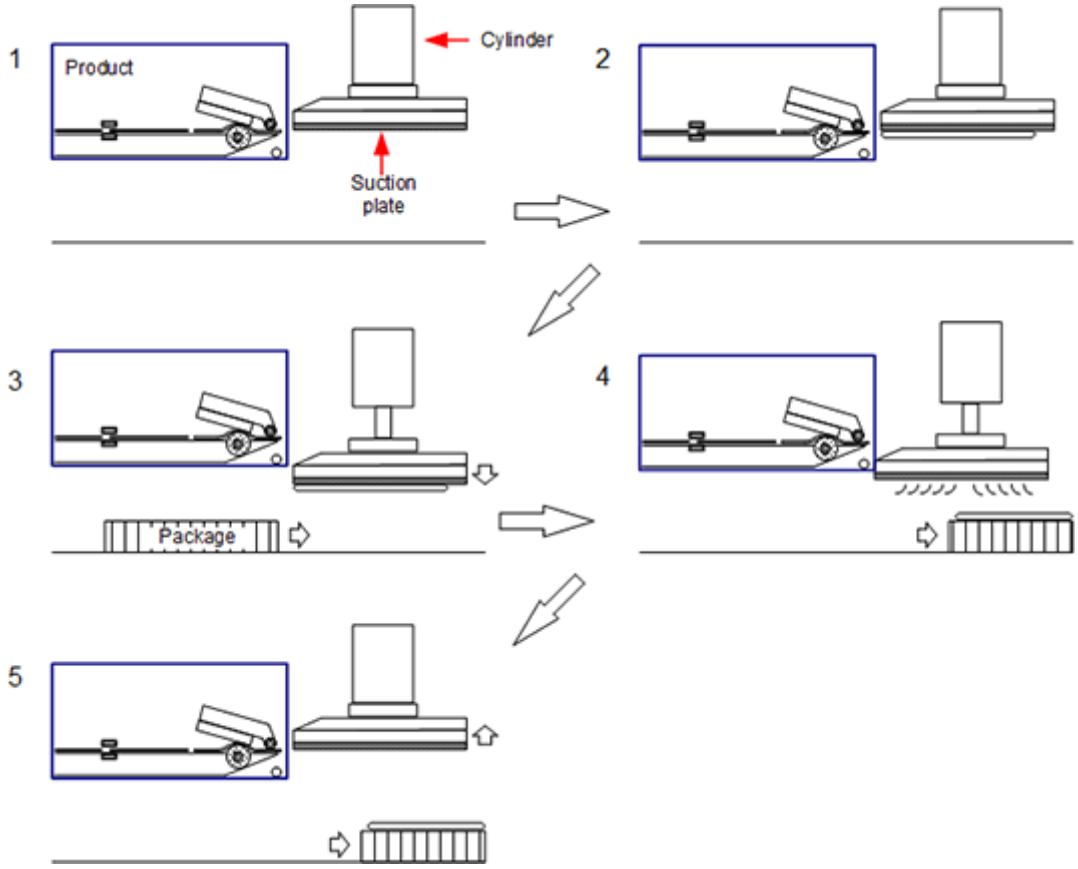

CJ method: Print and wait/wait at front end

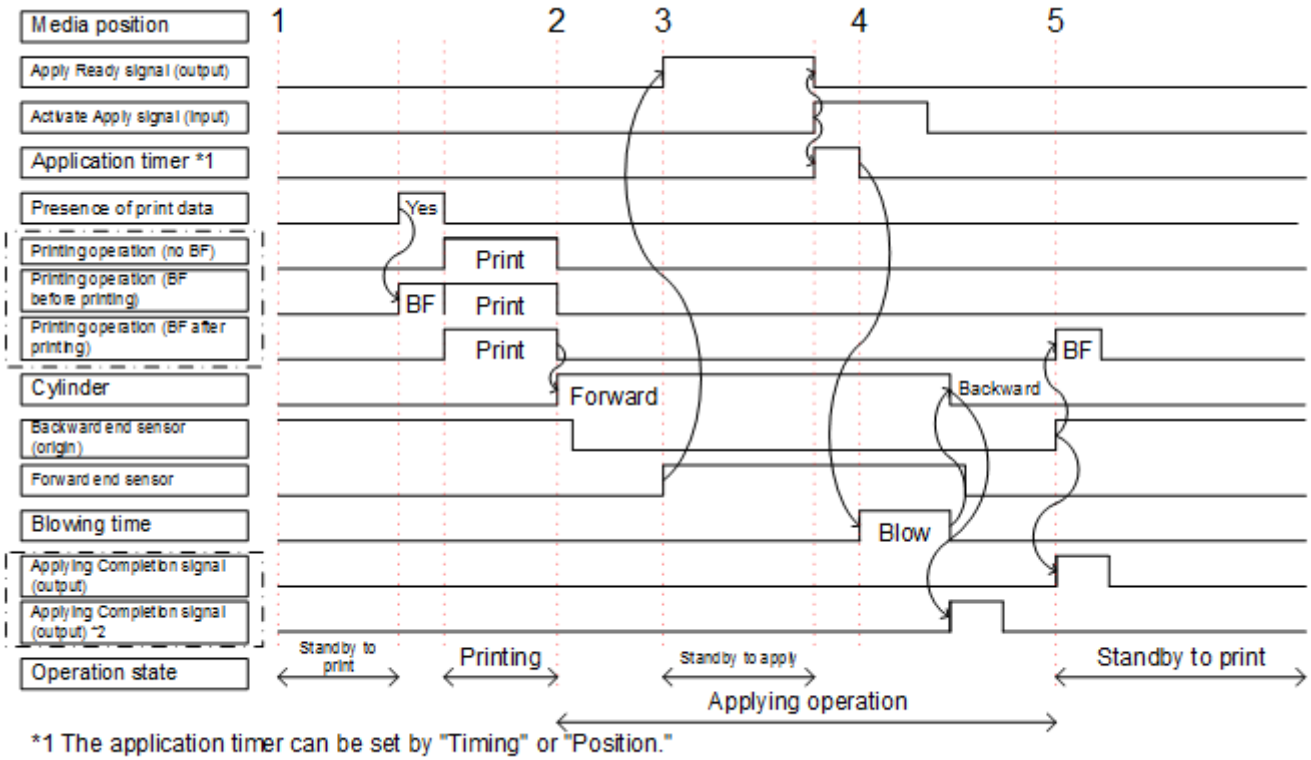

*1 The application timer can be set by "Timing" or "Position."
*2 "Applying Completion (Backward)"

- After blowing the label on, and after the cylinder returns, the backward end sensor turns on, and then the product waits 100 ms until printing starts.

Operation 2: Cylinder Jet (CJ) Method Application (Print and Wait/Wait at Origin)

Operation

The label that is delivered is held on the suction plate that is attached to the end of the cylinder (diagram 2).

The [Activate Apply] signal (input) turns on. And then, after the application time passes, the cylinder extends to its forward end (diagram 4) and the air blows the label on (diagram 5). After the blowing time passes, the cylinder returns (diagram 6).

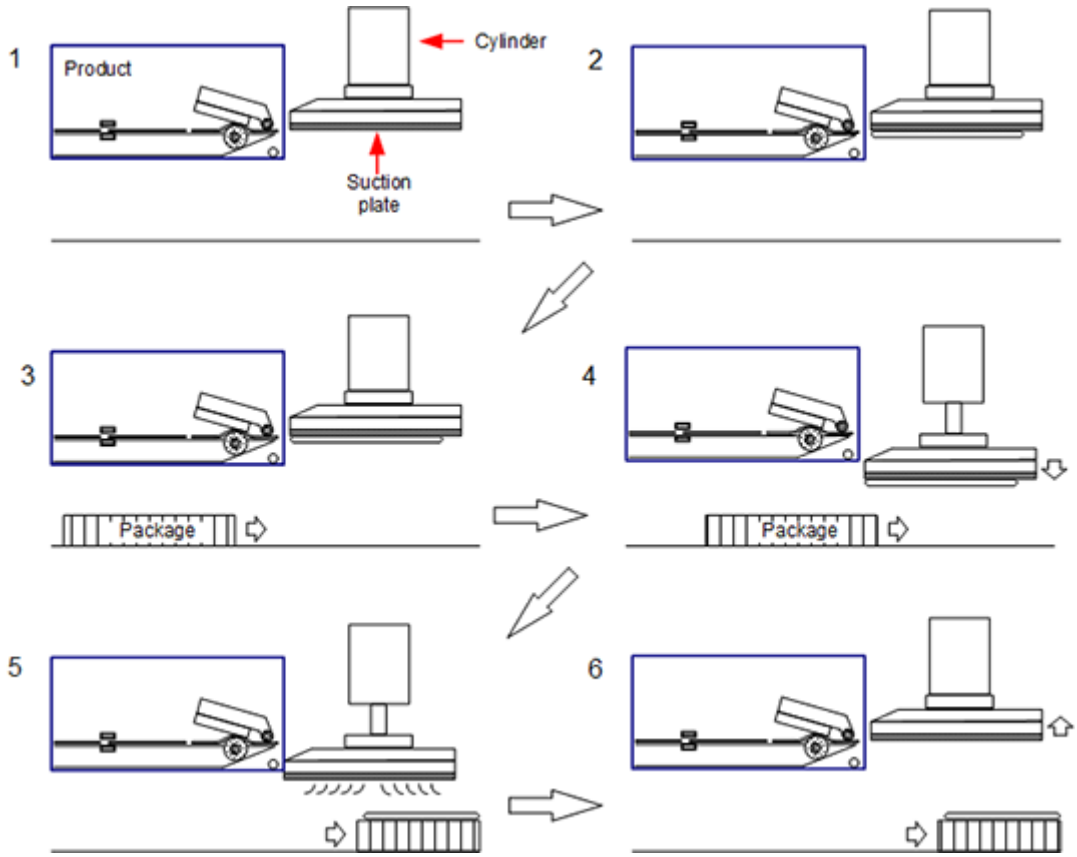

CJ method: Print and wait/wait at origin

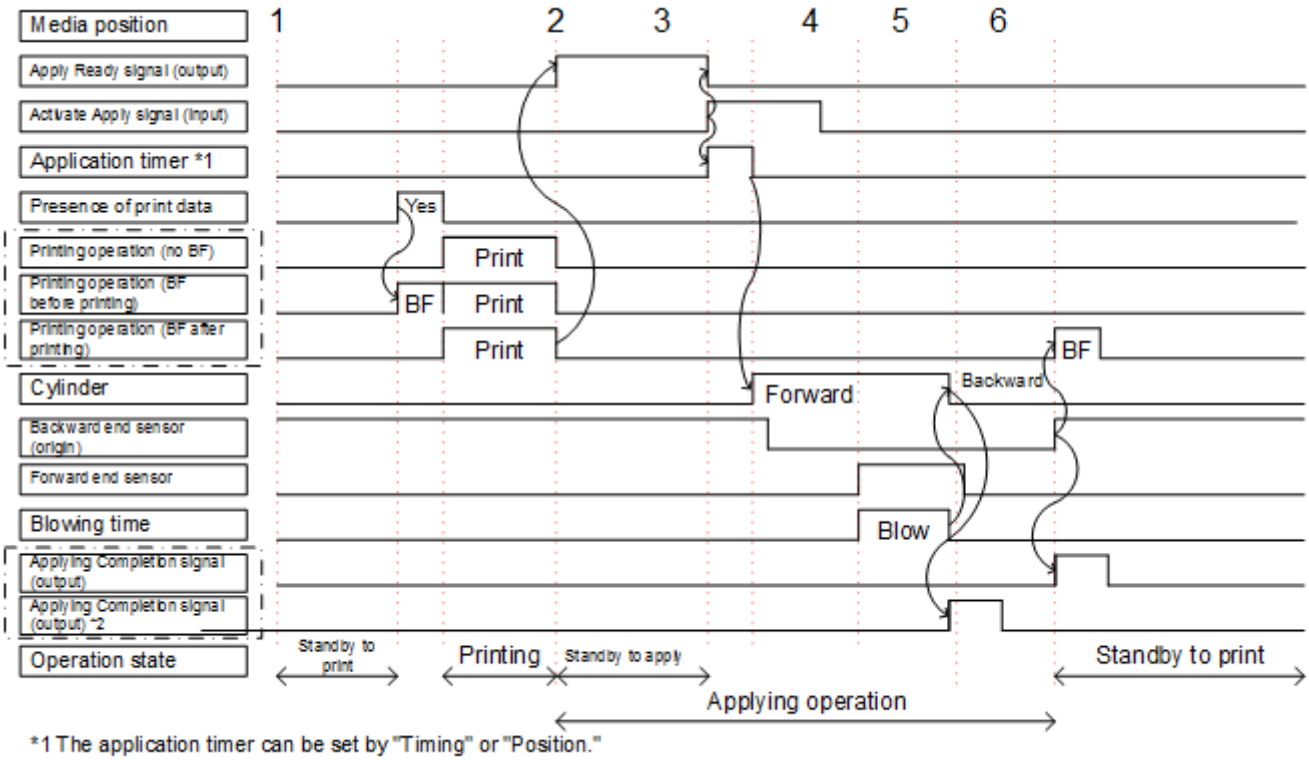

- After blowing the label on, and after the cylinder returns, the backward end sensor turns on, and then the product waits 100 ms until printing starts.

Operation 3: Cylinder Jet (CJ) Method Application (Wait Printing)

Operation

The [Activate Apply] signal (input) turns on. And then, after the application time passes, the label is delivered and held on the suction plate that is attached to the end of the cylinder (diagram 2).

After the label is delivered, the cylinder immediately extends (diagram 3). When the cylinder extends to its forward end, the air blows the label on (diagram 4). After the blowing time passes, the cylinder returns (diagram 5).

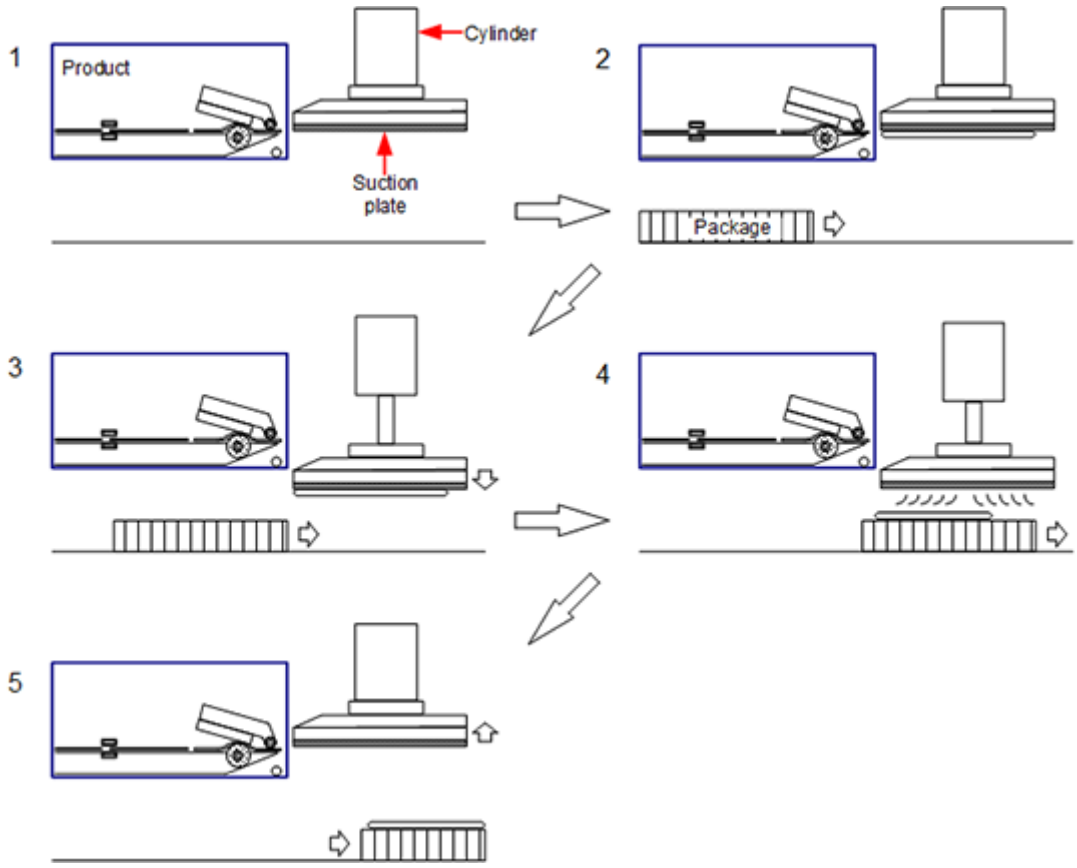

CJ method: Wait printing

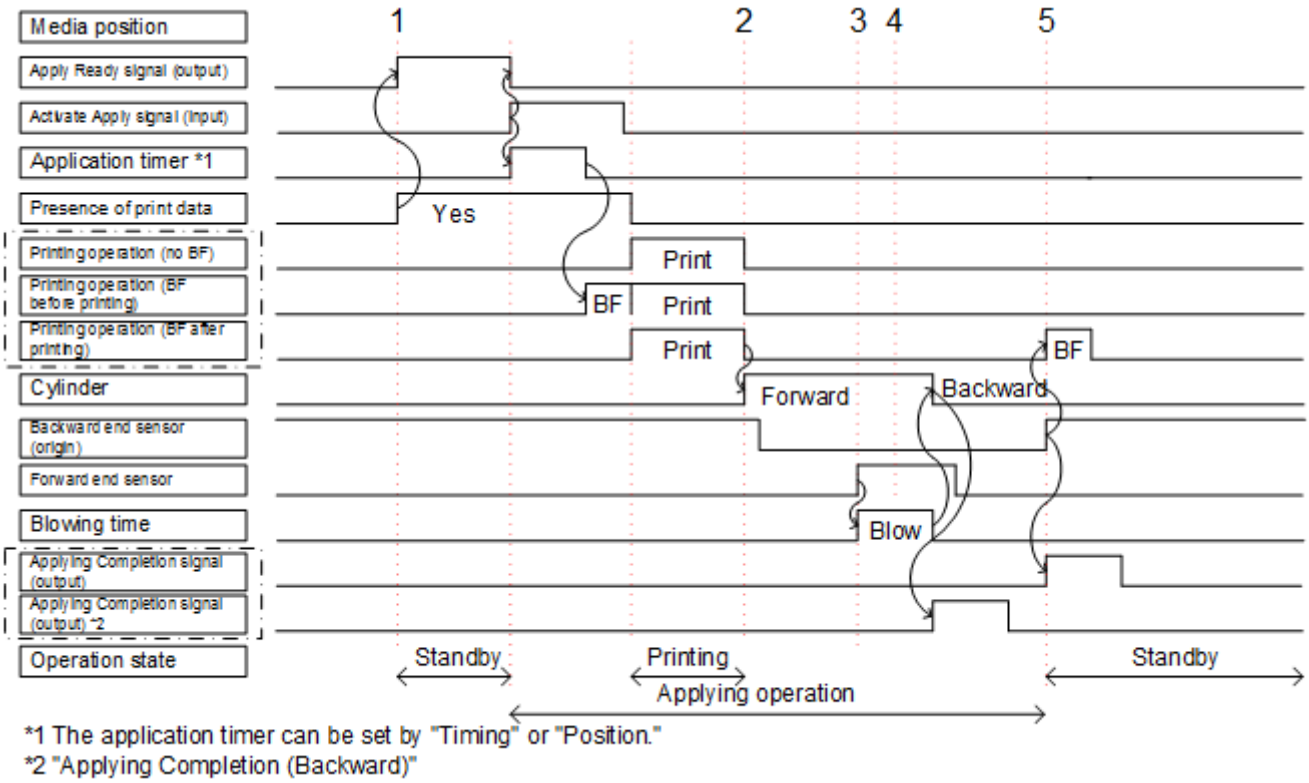

- After blowing the label on, and after the cylinder returns, the backward end sensor turns on, and then the product waits 100 ms until printing starts.

Operation 4: Pressure Jet (PJ) Method Application (Print and Wait)

Operation

The label that is delivered is held on the suction plate that is attached to the end of the cylinder (diagram 2). When the package stops, the [Activate Apply] signal (input) turns on, and after the application time passes, the cylinder extends and presses (blows) the label on (diagram 3).

After the pressure bonding time passes, the cylinder returns (diagram 4).

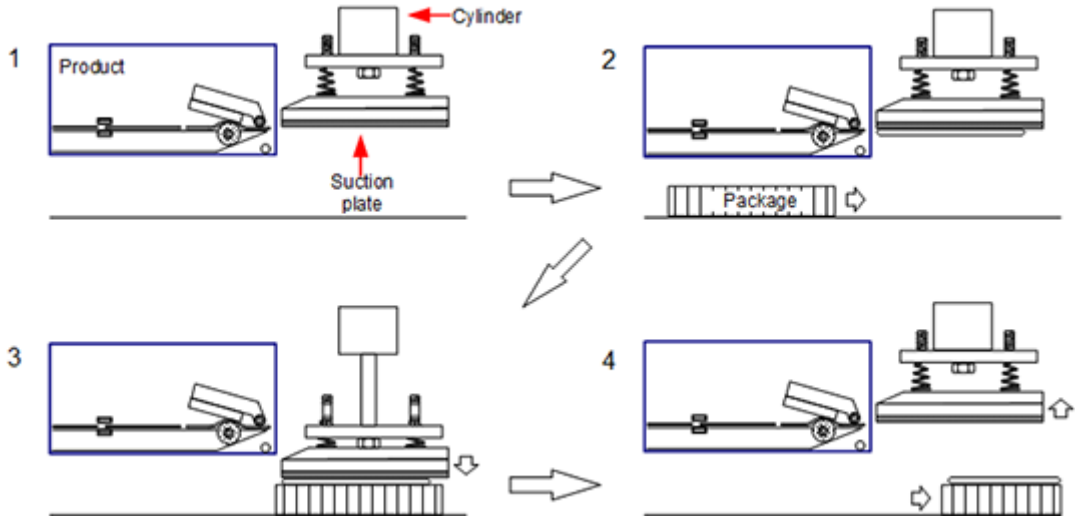

PJ method: Print and wait

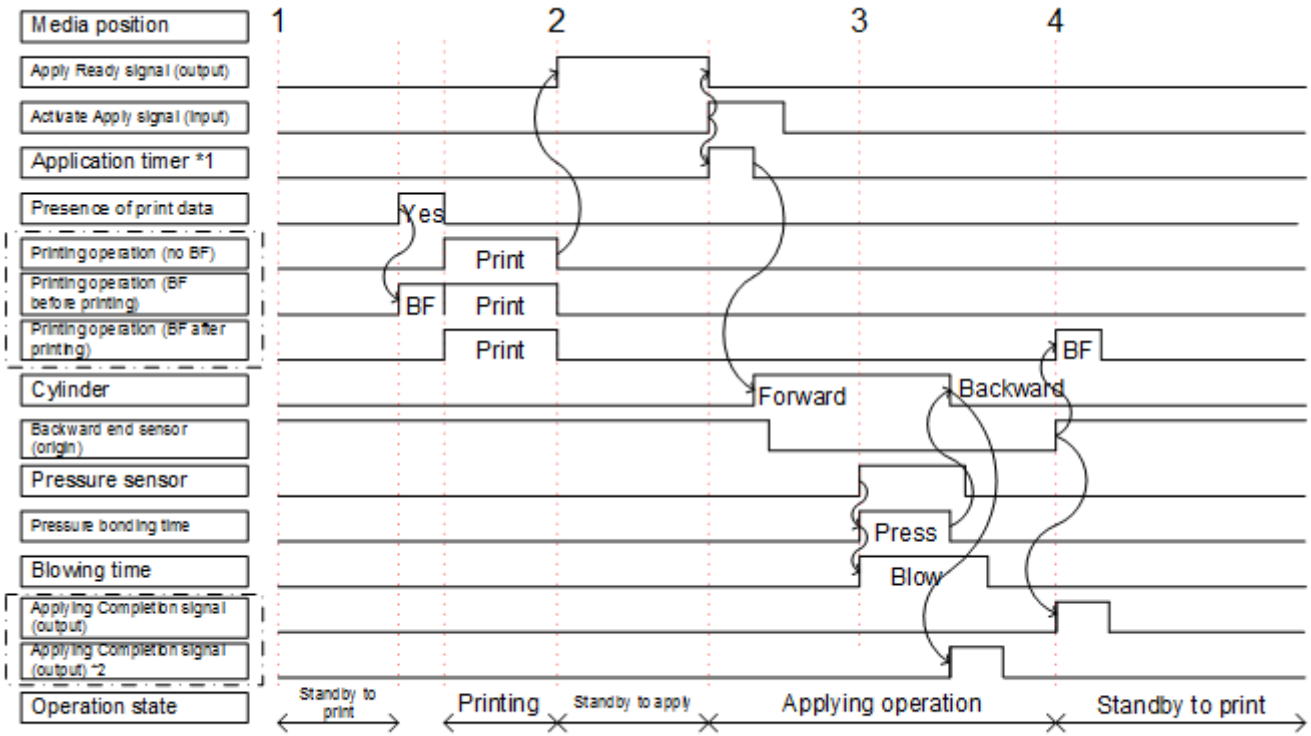

*1 The application timer can be set by "Timing" or "Position."
*2 "Applying Completion (Backward)"

- After pressing the label on, and after the cylinder returns, the backward end sensor turns on, and then the product waits 200 ms until printing starts.

Operation 5: Pressure Jet (PJ) Method Application (Wait Printing)

Operation

While the package is stopped, the [Activate Apply] signal (input) turns on. After the application time passes, the label is delivered and held on the suction plate that is attached to the end of the cylinder (diagram 2).

After the label is delivered, the cylinder immediately extends and presses (blows) on the label (diagram 3). After the pressure bonding time passes, the cylinder returns (diagram 4).

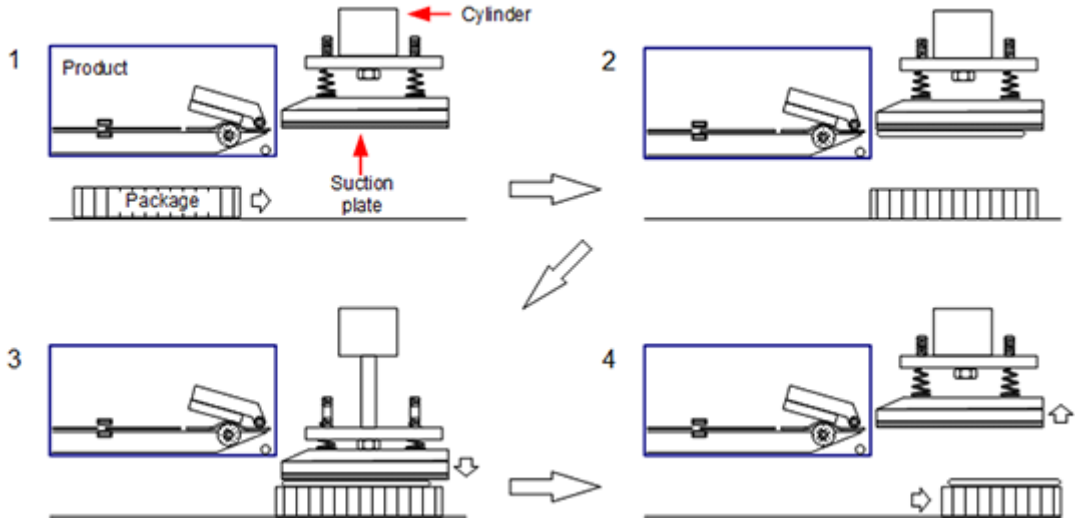

PJ method: Wait printing

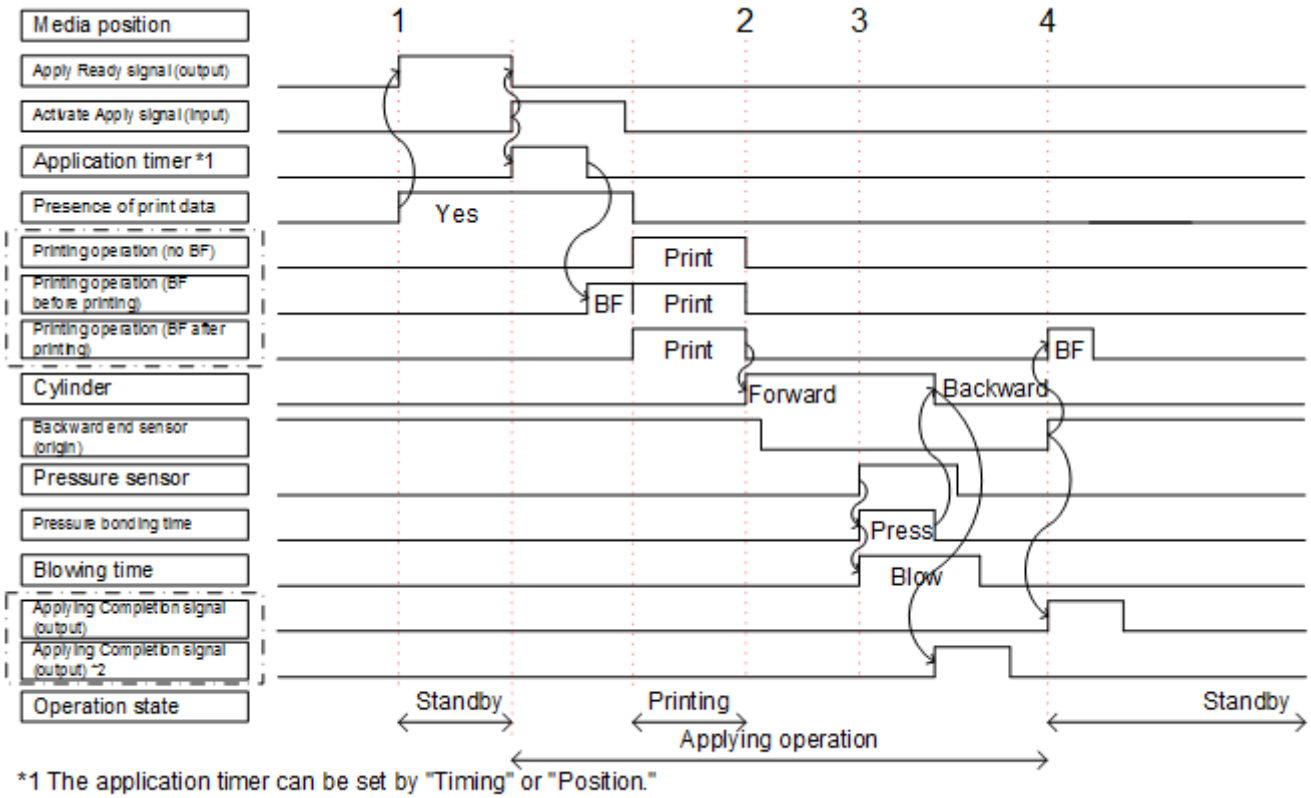

*1 The application timer can be set by "Timing" or "Position."
*2 "Applying Completion (Backward)"

- After pressing the label on, and after the cylinder returns, the backward end sensor turns on, and then the product waits 200 ms until printing is possible.

Operation 6: Pressure Jet (PJ) Method Application (Blow Action at PJ Miss: Enabled)

Operation

With the pressure jet (PJ) method, if the blow action at PJ miss is enabled, after the label is delivered, the cylinder extends and the suction plate does not contact (pressure on) the package (diagram 3), when the cylinder extends to its forward end, the air blows the label on (diagram 4). After the blowing time passes, the cylinder returns (diagram 5).

In this case, an Apply Error (Missed) does not occur.

- The following diagram is to explain the print and wait operation. However, the operation is the same if the cylinder extends and the suction plate does not make contact when doing a wait printing operation also.

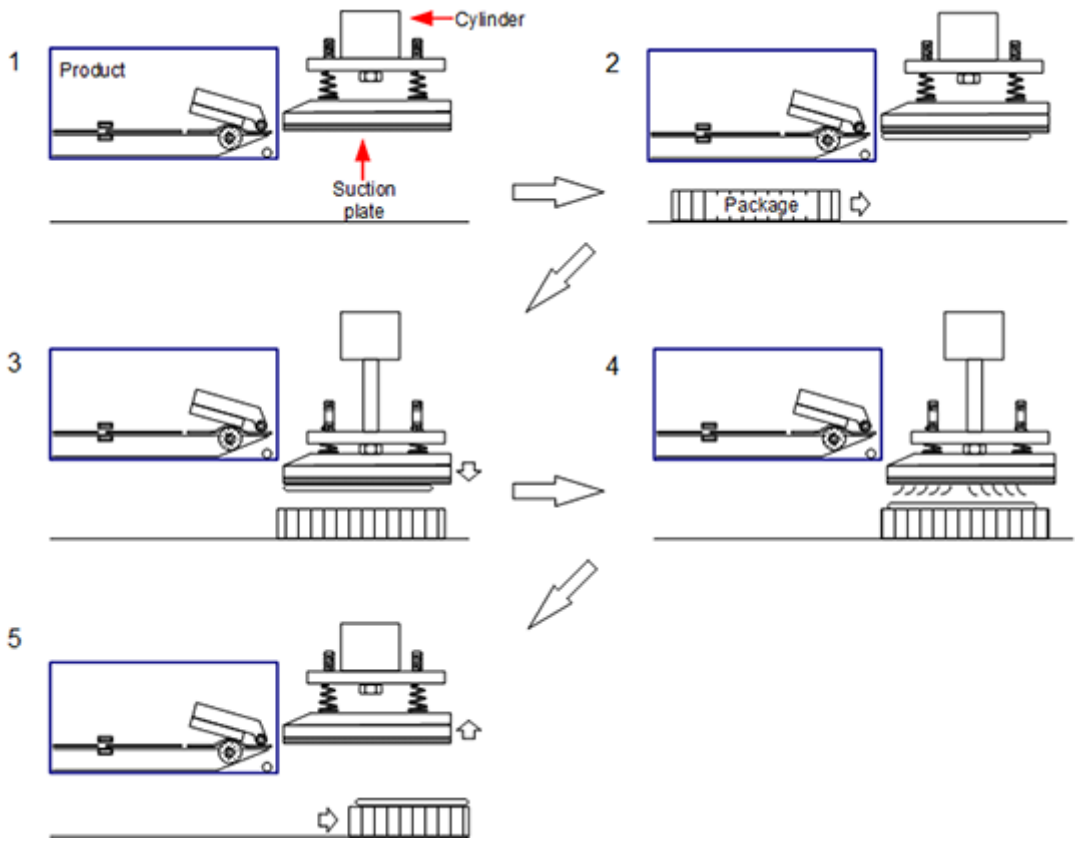

PJ method: Blow action at PJ miss, print and wait

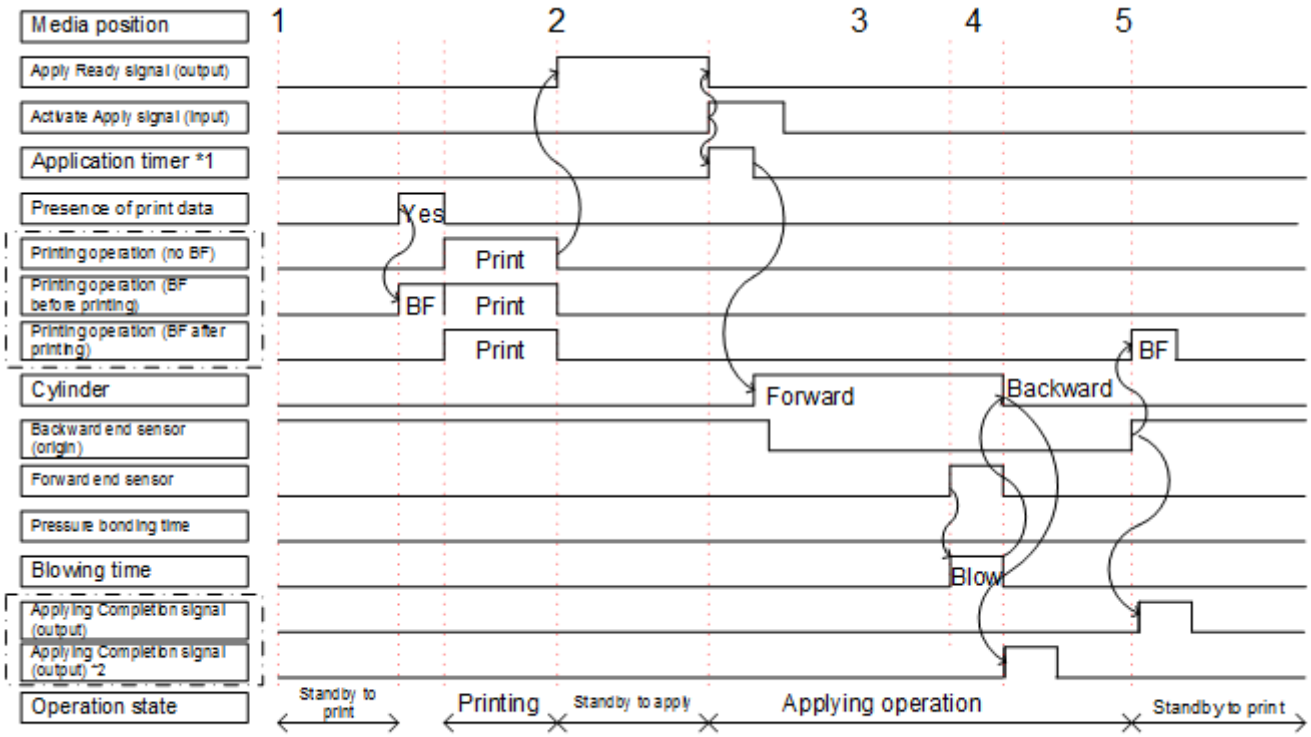

*1 The application timer can be set by "Timing" or "Position."
*2 "Applying Completion (Backward)"

Operation 7: Pass Operation (Print and Wait)

Operation

When a pass command is received, an [Apply Ready] signal (output) is output without printing a label, then when the [Activate Apply] signal (input) turns on, the [Applying Completion] signal (output) is output.

- The following diagram is to explain the cylinder/pressure jet method, but the operation is the same for all application methods.

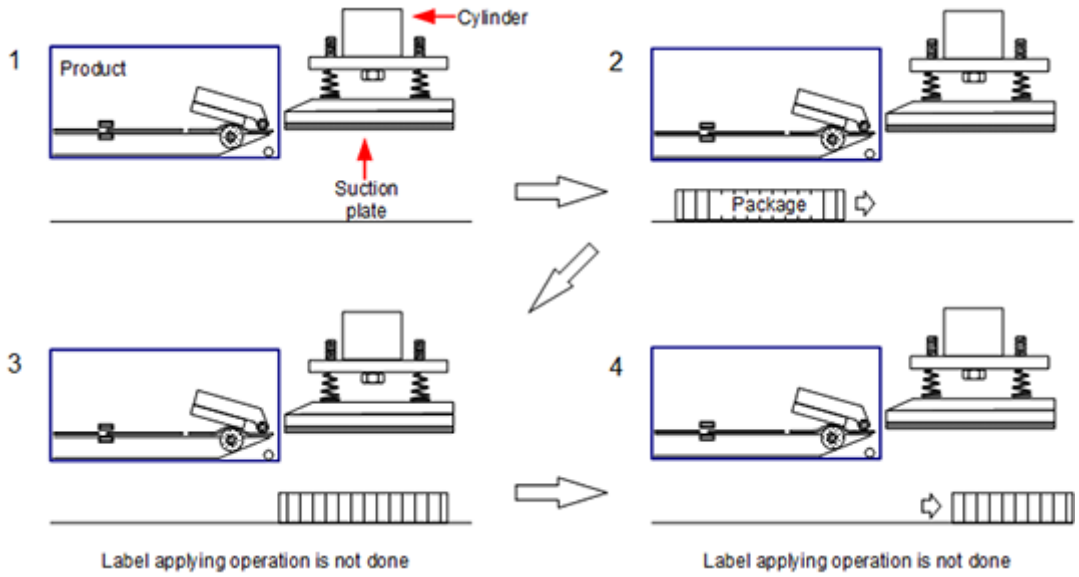

Pass operation: Print and wait, PJ

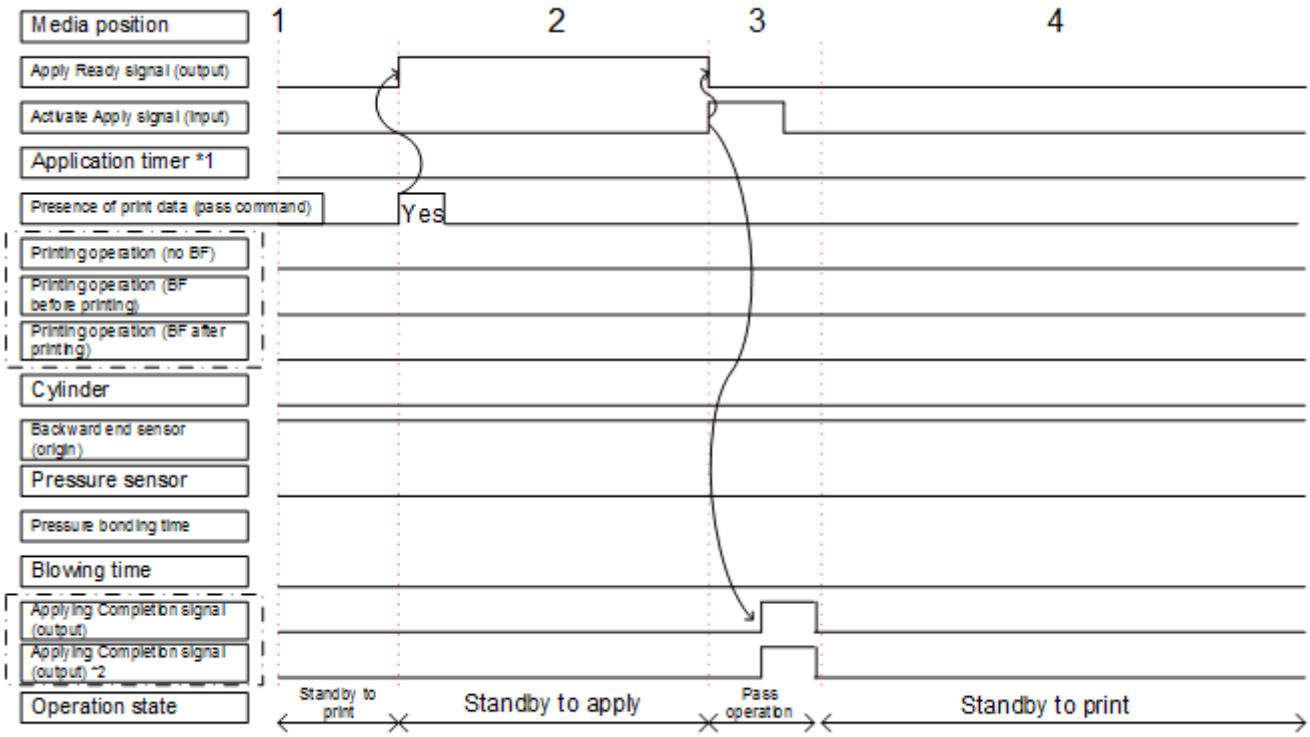

*1 The application timer can be set by "Timing" or "Position."
*2 "Applying Completion (Backward)"

Operation 8: Pass Operation (Wait Printing)

Operation

When a pass command is received, an [Apply Ready] signal (output) is output without printing a label, then when the [Activate Apply] signal (input) turns on, the [Applying Completion] signal (output) is output.

- The following diagram is to explain the cylinder/pressure jet method, but the operation is the same for all application methods.

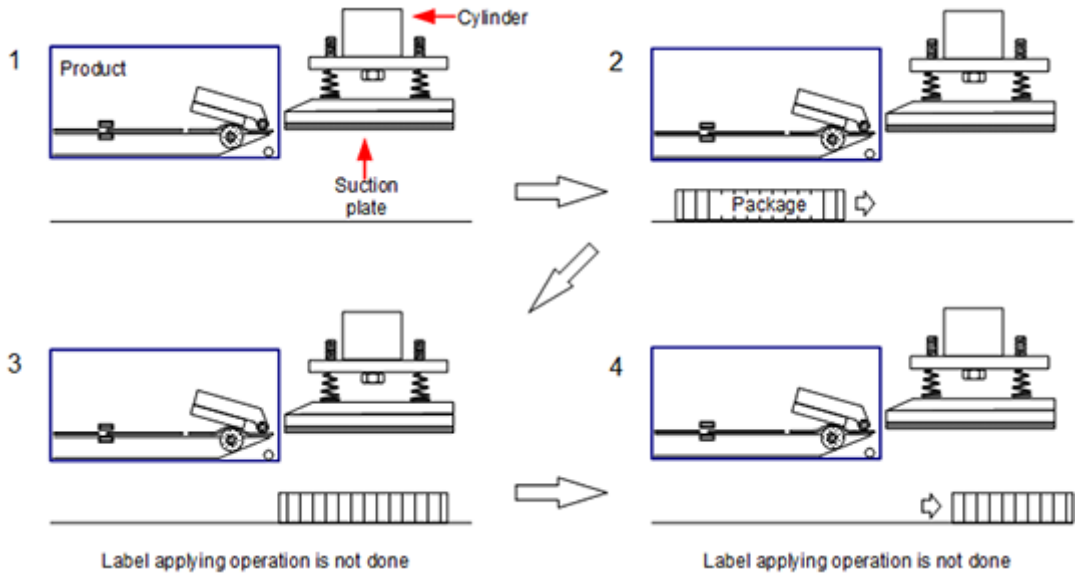

Pass operation: Wait printing, PJ

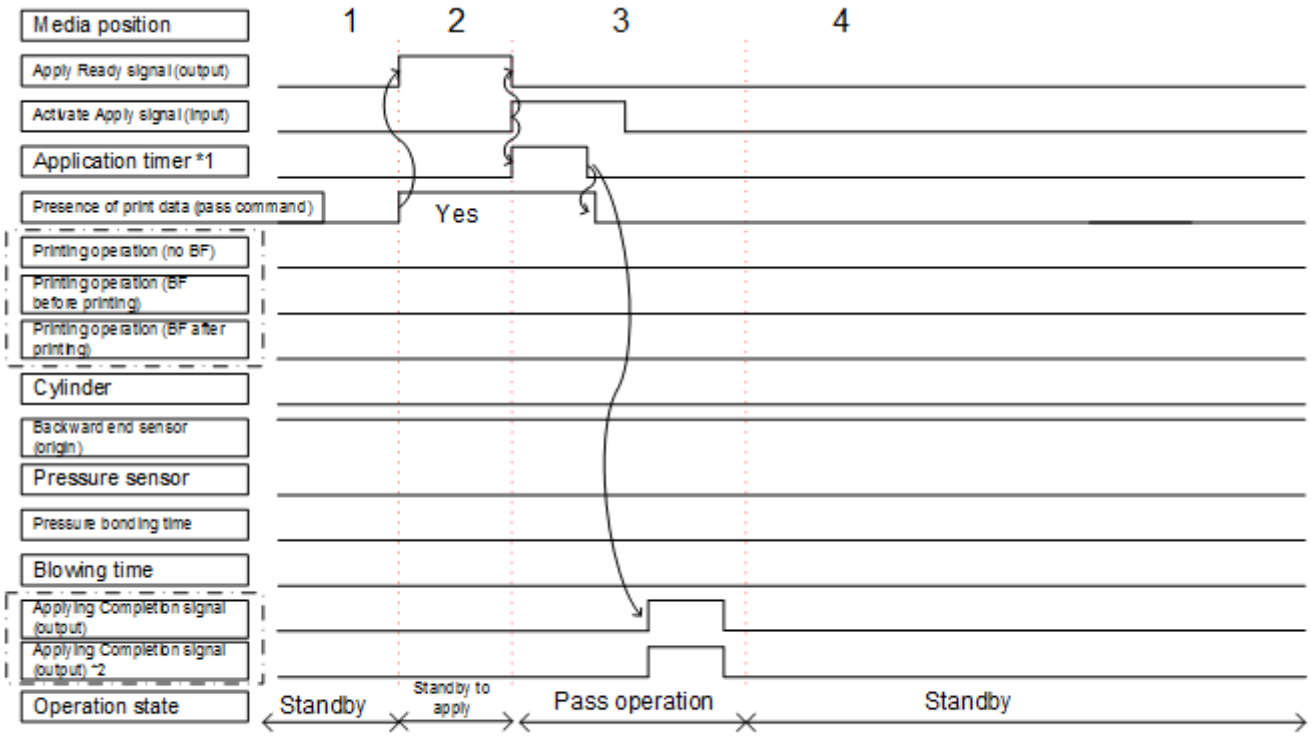

*1 The application timer can be set by "Timing" or "Position."
*2 "Applying Completion (Backward)"

Operation 9: Printing and Applying Labels According to Various Input Signals

Operation

The [Print Start] signal (input) turns on and the label is delivered and held on the suction plate that is attached to the end of the cylinder (diagram 2). While the package is stopped, the [Activate Apply] signal (input) turns on. After the application time passes, the cylinder presses (diagram 3).

After the pressure bonding time, the cylinder returns (diagram 4).

- The following diagram is to explain the cylinder/pressure jet method, but printing according to the [Print Start] signal (input) is the same for all application methods, and application can be done according to the [Activate Apply] signal (input).

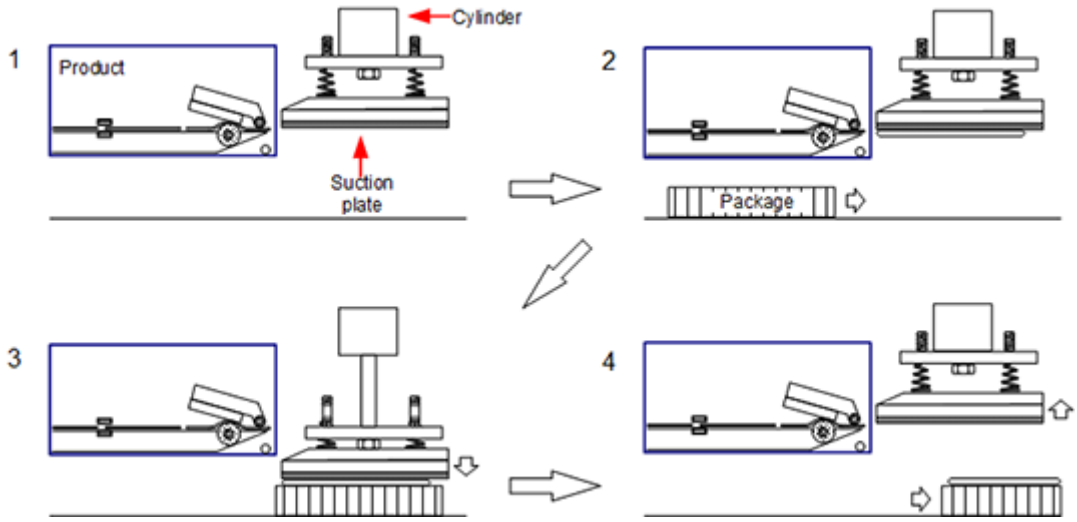

C/PJ method: Print/apply/signal activations

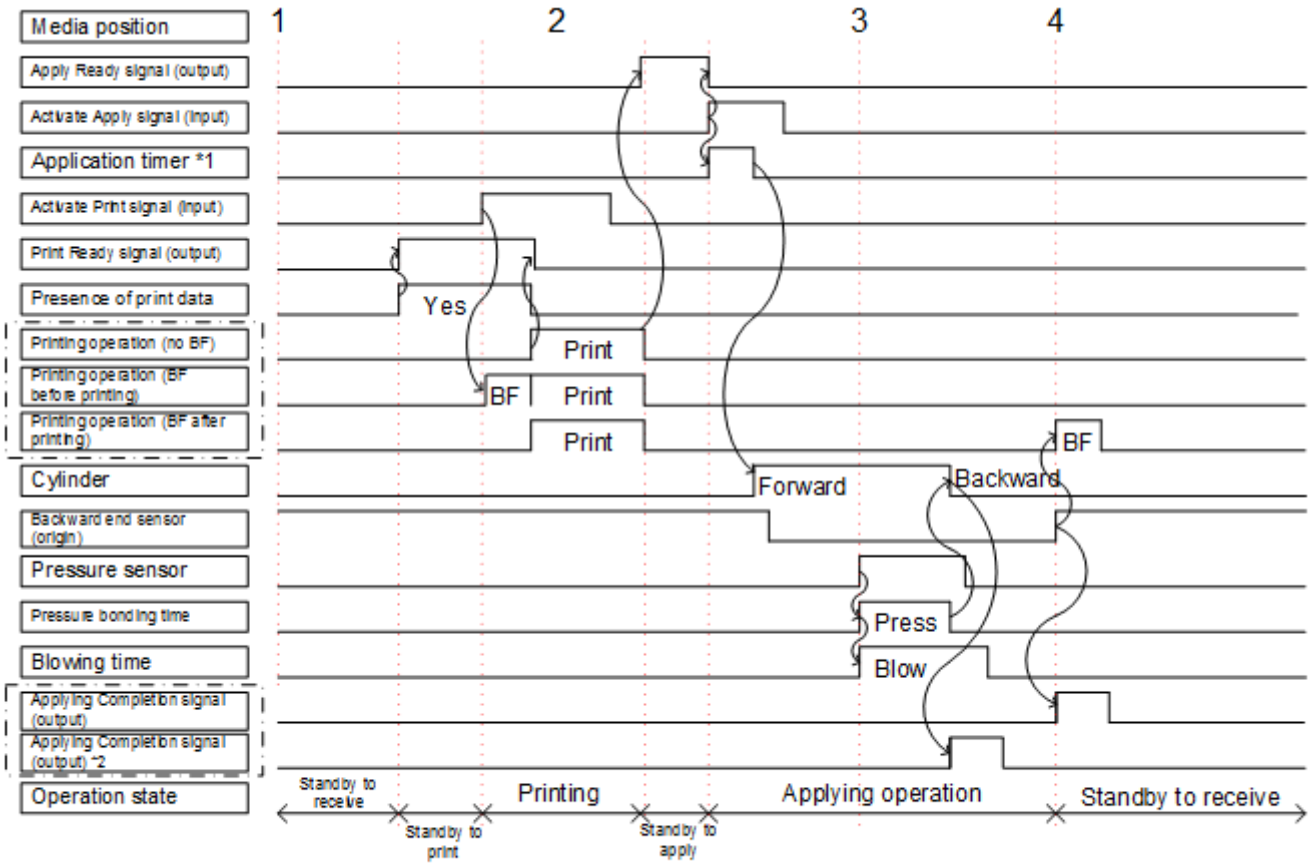

*1 The application timer can be set by "Timing" or "Position."
*2 "Applying Completion (Backward)"

Adjusting the Product's Buzzer Volume

The adjustment procedure for the buzzer volume when an error occurs is as follows:

- This setting adjusts the volume of the buzzer on the product. It does not set the volume of the warning lamp's buzzer.

1. **When the product is in Online mode, press the button to change to Offline mode.**

2. **Press the button to show the [Settings] menu.**

3. **Press the / buttons to select [System], and then press the button.**

4. Press the ▲/▼ buttons to select [Sound] > [Error Sound], and then press the ↵ button.

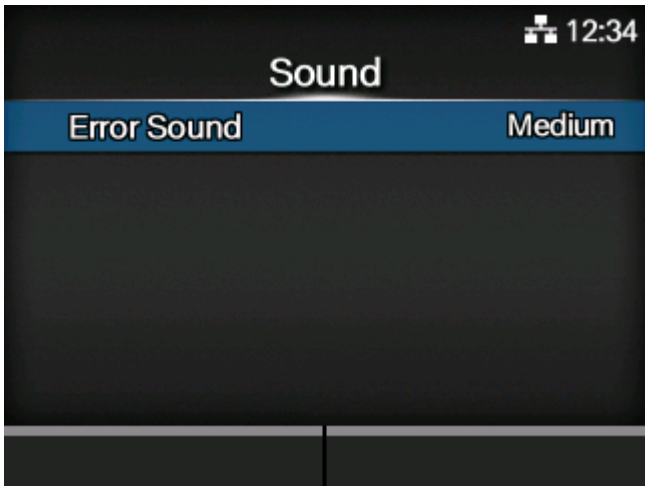

The [Error Sound] screen appears.

5. Press the ▲/▼ buttons to set the volume.

The options are as follows:

[Off]

Mute the sound.

[Low]

Low volume.

[Medium]

Medium volume.

[High]

High volume.

6. Press the ··· button or ↵ button to save the setting.

Initializing the Product

Procedures for Initializing

Initializing the Data Saved on the Product

Initialize the data saved on the product.

The data to be initialized are the fonts and graphics registered in the product.

- It is generally not necessary to perform the initialization. Doing so could change the print conditions.

1. Press the button in Online mode.

The product changes to Offline mode.

2. Press the button.

The product changes to Settings mode.

3. Select [Tools] using the / buttons.

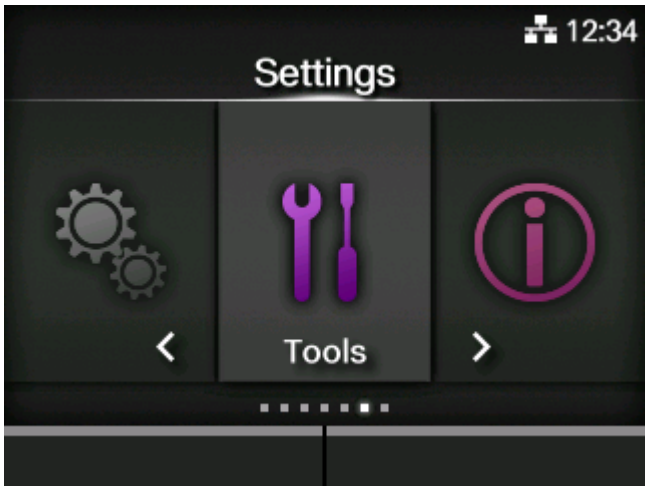

4. Press the button.

The item list appears.

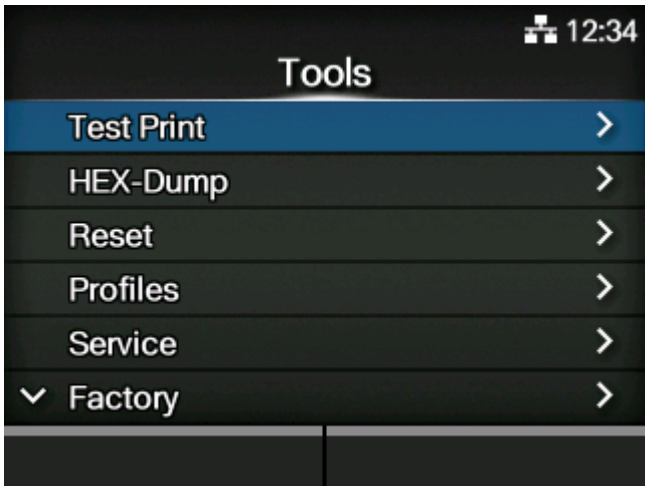

5. **Select [Reset] using the ▲/▼ buttons.**

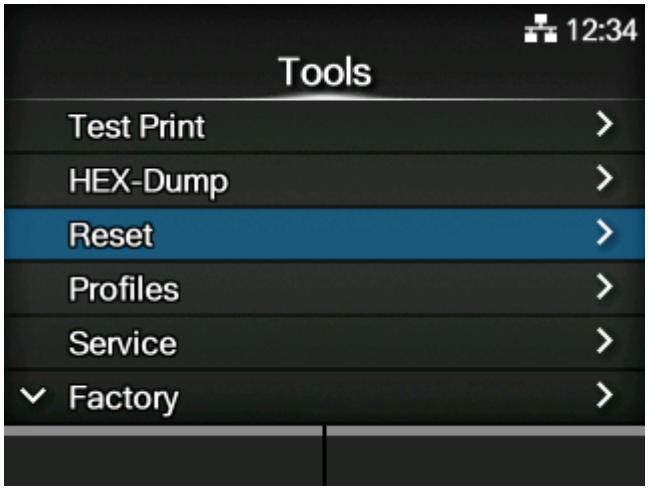

6. **Press the ↵ button.**

The [Select] screen appears.

7. **Select [Data] using the ▲/▼ buttons.**

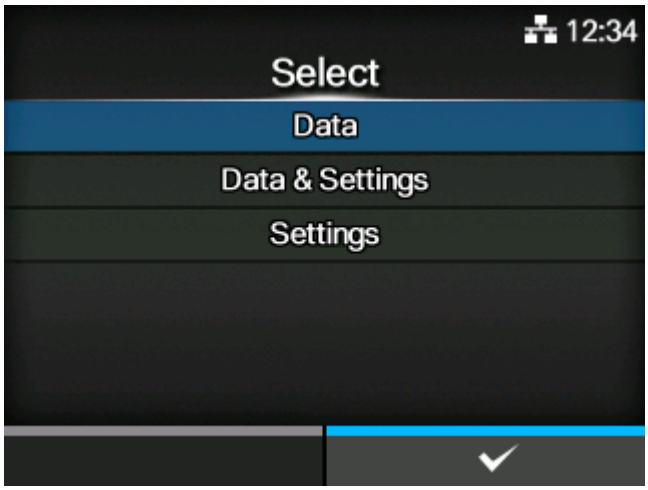

8. **Press the button.**

The confirmation screen appears.

9. Press the button to perform the initialization.

Press the button to cancel the initialization.

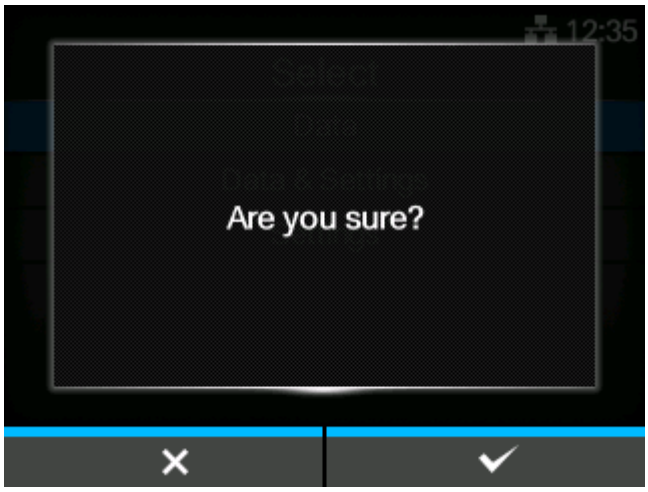

The initialization is performed.

When the initialization is complete, the product reboots.

Initialize the Setting Values and Data on the Product

Initialize the data and setting values on the product.

- It is generally not necessary to perform the initialization. Doing so could change the print conditions.
- The data to be initialized are the fonts and graphics registered in the product.

1. Press the button in Online mode.

The product changes to Offline mode.

2. **Press the button.**

The product changes to Settings mode.

3. **Select [Tools] using the / buttons.**

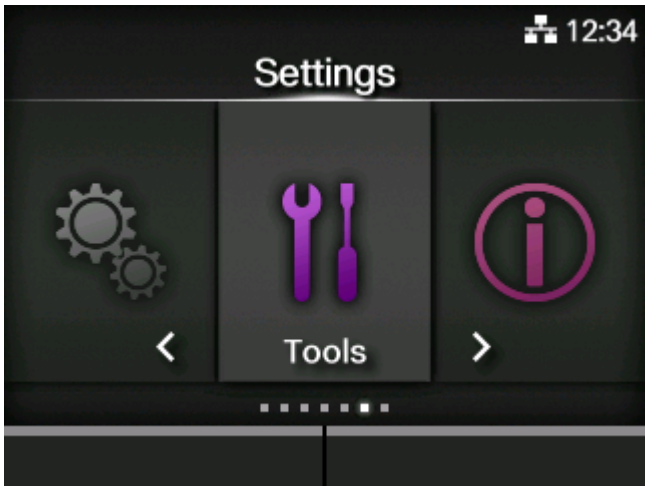

4. **Press the button.**

The item list appears.

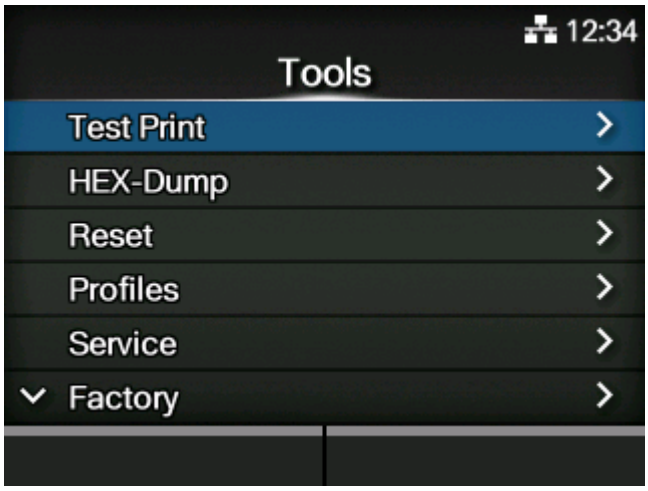

5. Select [Reset] using the ▲/▼ buttons.

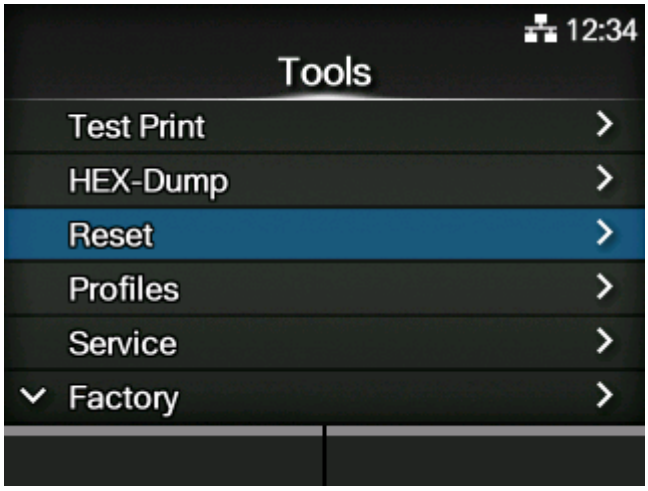

6. Press the button.

The [Select] screen appears.

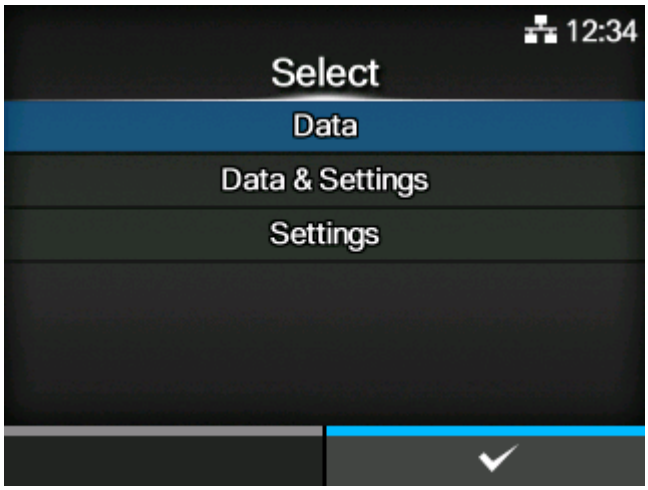

7. Select [Data & Settings] using the ▲/▼ buttons.

8. Press the button.

The item list appears.

9. Select the setting items to be initialized using the ▲/▼ buttons.

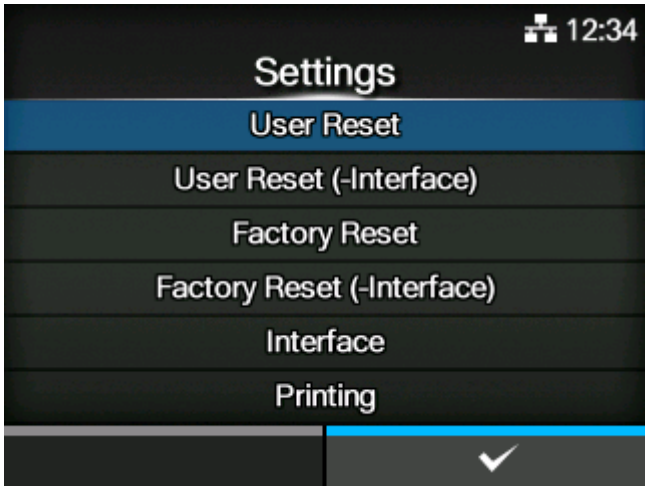

[User Reset]

Initialize the data and setting values.

[User Reset (-Interface)]

Initialize the data and setting values that are not included in the [Interface] menu.

[Factory Reset]

Initialize to the status after factory shipment.

[Factory Reset (-Interface)]

Initialize the items that are not included in the [Interface] menu to the status after factory shipment.

[Interface]

Initialize the data and setting values in the [Interface] menu.

[Printing]

Initialize the data and setting values in the [Printing] menu.

10. Press the button.

The confirmation screen appears.

11. Press the button to perform the initialization.

Press the button to cancel the initialization.

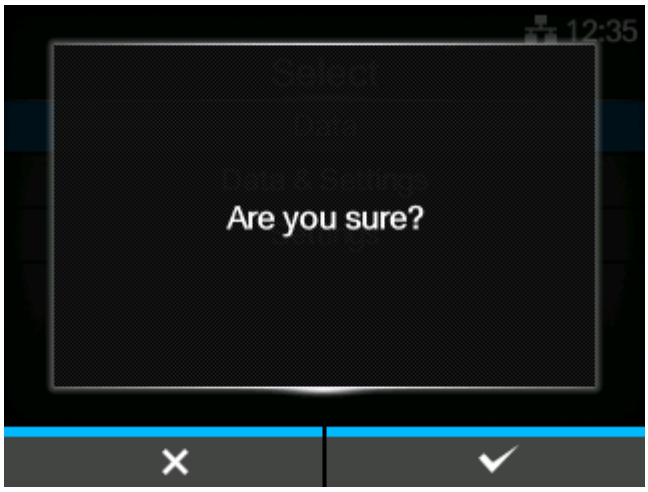

The initialization is performed.

When the initialization is complete, the product reboots.

Initialize the Setting Values on the Product

Initialize the setting values on the product.

- It is generally not necessary to perform the initialization. Doing so could change the print conditions.

1. Press the button in Online mode.

The product changes to Offline mode.

2. **Press the button.**

The product changes to Settings mode.

3. **Select [Tools] using the / buttons.**

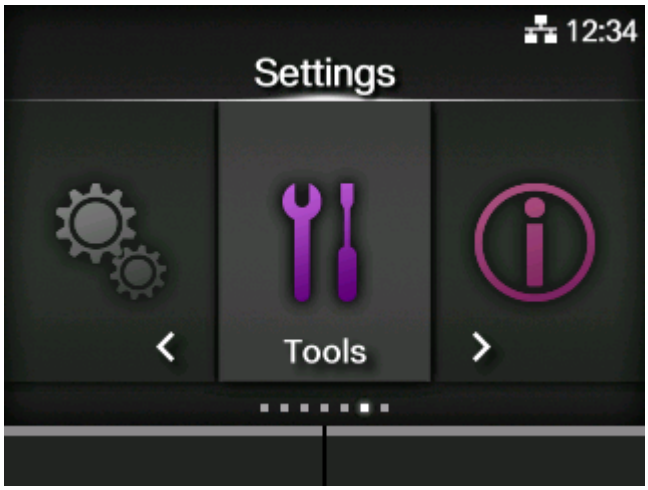

4. **Press the button.**

The item list appears.

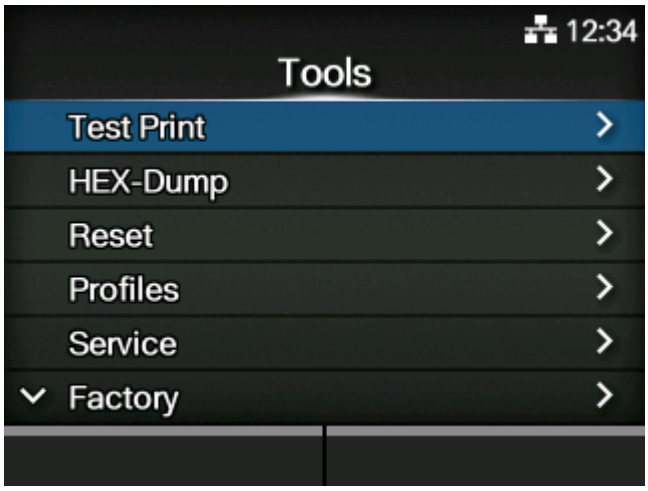

5. **Select [Reset] using the ▲/▼ buttons.**

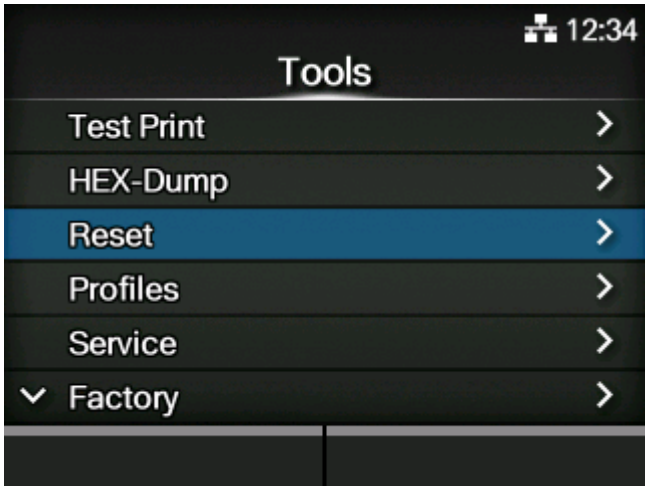

6. **Press the ↵ button.**

The [Select] screen appears.

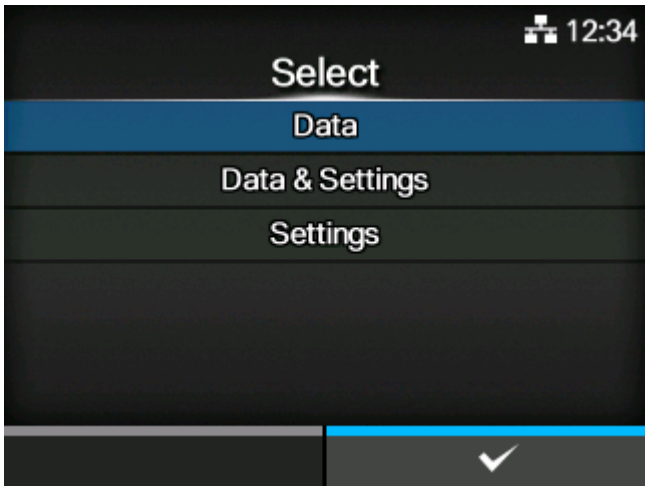

7. **Select [Settings] using the ▲/▼ buttons.**

8. **Press the button.**

The item list appears.

9. Select the setting items to be initialized using the ▲/▼ buttons.

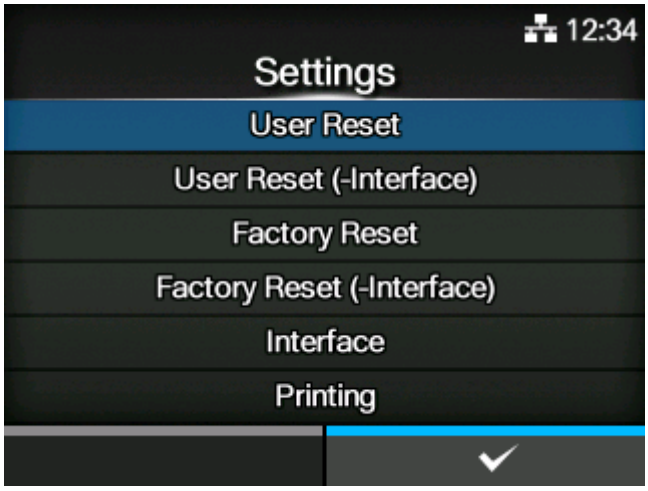

[User Reset]

Initialize the setting values.

[User Reset (-Interface)]

Initialize the setting values that are not included in the [Interface] menu.

[Factory Reset]

Initialize to the status after factory shipment.

[Factory Reset (-Interface)]

Initialize the items that are not included in the [Interface] menu to the status after factory shipment.

[Interface]

Initialize the setting values in the [Interface] menu.

[Printing]

Initialize the setting values in the [Printing] menu.

10. Press the button.

The confirmation screen appears.

11. Press the button to perform the initialization.

Press the button to cancel the initialization.

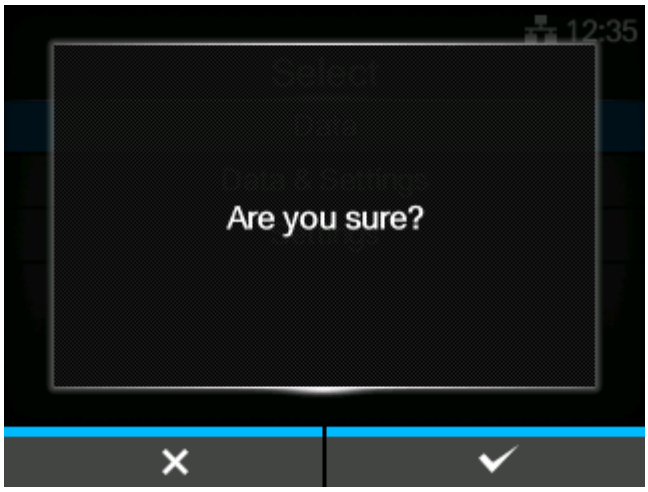

The initialization is performed.

If a message prompting you to restart the product appears on the Online/Offline screen, reboot the product to apply the settings.

List of Initial Values

[Printing] Menu

The initial value refers to the setting value of the product when it was shipped from the factory. If you reset the product, the setting values of the product will change back to the factory default values. The table below shows the initial value of each setting item and type of reset that changes the value back to the initial value.

- Normally, it is not necessary to perform the initialization. Doing an initialization removes all the product's settings that the customer changed.

Setting Item	Initial Value	User Reset	Factory Reset
[Label Length]	**203 dpi** 20000 dots **305 dpi** 18000 dots	Yes	Yes
[Label Width]	**203 dpi** 832 dots **305 dpi** 1248 dots	Yes	Yes
[Auto Measure]	Disabled	Yes	Yes
[Printing Mode]	Use Ribbon	Yes	Yes
[Ribbon Near End]	Enabled	Yes	Yes
[Speed]	**203 dpi** 4 ips **305 dpi** 4 ips	Yes	Yes
[Sensor Type]	I-Mark	Yes	Yes
[Print Mode]	Dispenser	Yes	Yes
[Backfeed]	Before (If [Print Mode] is set to [Dispenser]) None (If [Print Mode] is set to [Continuous] or [Continuous-Standalone])	Yes	Yes

Setting Item	Initial Value	User Reset	Factory Reset
[Backfeed Timing]	0 ms (If [Backfeed] is set to [After])	No	Yes
[Darkness Range]	A	Yes	Yes
[Darkness]	5	Yes	Yes
[Imaging]			
[Vertical]	0 dot	Yes	Yes
[Horizontal]	0 dot	Yes	Yes
[Advanced]			
[Calibrate]			
[Auto-calibration]	Gap + I-Mark	-	-
[GAP Levels]	Value adjusted by the factory.	No	No
[Gap Slice Level]	Auto	No	No
[I-Mark Levels]	Value adjusted by the factory.	No	No
[I-Mark Slice Level]	Auto	No	No
[Head Check]	All	Yes	Yes
[Head Check Mode]	Always	Yes	Yes
[Every Page]	1	Yes	Yes
[Check Media Size]	Enabled	Yes	Yes
[Adjustments]			
[Offset]	0 dot	No	No
[Pitch]	0 dot	No	No
[Darkness Adjust]	50	No	No
[Start Online]	Enabled	Yes	Yes
[Feed After Error]	Disabled	Yes	Yes
[Feed At Power On]	Disabled	Yes	Yes
[Finisher Feed]	0 dot (Standard)	Yes	Yes
[Paper End]	Using Gap	Yes	Yes
[Prioritize]	Commands	Yes	Yes

Setting Item	Initial Value	User Reset	Factory Reset
[Reprint]	Disabled	Yes	Yes
[Print End Position]	0 dot	Yes	Yes
[Label Near End]	Enabled	Yes	Yes
[Receive After Reset]	Enabled	Yes	Yes
[Feed After Error Message]	Enabled	Yes	Yes
[Job Name Display]	Disabled	Yes	Yes
[Virtual Sensor Position]	**203 dpi** 708 dots **305 dpi** 1062 dots	Yes	Yes
[Print Start Position]	0 mm (0")	Yes	Yes
[Ribbon Near End Level]	Standard	Yes	Yes
[Paper End Output Timing]	Print Standard	Yes	Yes
[Ribbon End Sensor]	Disabled	No	Yes
[Label End Sensor]	Disabled	No	Yes

[Interface] Menu

The initial value refers to the setting value of the product when it was shipped from the factory. If you reset the product, the setting values of the product will change back to the factory default values. The table below shows the initial value of each setting item and type of reset that changes the value back to the initial value.

- Normally, it is not necessary to perform the initialization. Doing an initialization removes all the product's settings that the customer changed.

Setting Item	Initial Value	User Reset	Factory Reset
[Network]			
[Settings]			
[LAN]			
[IPv4]			

Setting Item	Initial Value	User Reset	Factory Reset
[Mode]	DHCP	Yes/ Interface	Yes/ Interface
[DHCP]	-	-	-
[IP Address]	0.0.0.0	Yes/ Interface	Yes/ Interface
[Netmask]	255.255.255.0	Yes/ Interface	Yes/ Interface
[Gateway]	0.0.0.0	Yes/ Interface	Yes/ Interface
[DNS]	0.0.0.0	Yes/ Interface	Yes/ Interface
[IPv6]			
[Mode]	Disable	Yes/ Interface	Yes/ Interface
[DHCP]	-	-	-
[IP Address]	::	Yes/ Interface	Yes/ Interface
[Prefix Length]	64	Yes/ Interface	Yes/ Interface
[Gateway]	::	Yes/ Interface	Yes/ Interface
[DNS]	::	Yes/ Interface	Yes/ Interface
[Proxy]			
[Enabled]	Disabled	Yes/ Interface	Yes/ Interface
[Server]	-	Yes/ Interface	Yes/ Interface
[Exclude]	-	Yes/ Interface	Yes/ Interface
[Interface]	Auto	Yes/ Interface	Yes/ Interface
[Services]			
[Ports]			

Setting Item	Initial Value	User Reset	Factory Reset
[Port1]	1024	Yes/ Interface	Yes/ Interface
[Port2]	1025	Yes/ Interface	Yes/ Interface
[Port3]	9100	Yes/ Interface	Yes/ Interface
[Flow Control]	StatusL	Yes/ Interface	Yes/ Interface
[TCP Connection Queue]	Disabled	Yes/ Interface	Yes/ Interface
[Legacy Status for Port 9100]	Disabled	Yes/ Interface	Yes/ Interface
[ENQ Reply Delay]	0 ms	Yes/ Interface	Yes/ Interface
[Status4 Cyclic Response]	500 ms	Yes/ Interface	Yes/ Interface
[BCC]	Disabled	Yes/ Interface	Yes/ Interface
[StatusL]	Standard	Yes/ Interface	Yes/ Interface
[NTP]			
[Enable]	Disabled	No	Yes
[Error]	Disabled	Yes/ Interface	Yes/ Interface
[Time Server IP]	0.0.0.0	Yes/ Interface	Yes/ Interface
[LPD]			
[Enable]	Enabled	Yes/ Interface	Yes/ Interface
[DNS Lookup]	Enabled	Yes/ Interface	Yes/ Interface
[FTP]			
[Enable]	Disabled	Yes/ Interface	Yes/ Interface

Setting Item	Initial Value	User Reset	Factory Reset
[FTP Timeout]	300 sec	Yes/ Interface	Yes/ Interface
[SNMP]			
[sysContact]	-	Yes/ Interface	Yes/ Interface
[sysName]	-	Yes/ Interface	Yes/ Interface
[sysLocation]	-	Yes/ Interface	Yes/ Interface
[prtMarkerCounterUnit]	meters	Yes/ Interface	Yes/ Interface
[Agent]			
[Enable]	Enabled	Yes/ Interface	Yes/ Interface
[Read-Only]			
[SNMP Version]	1|2c|3	Yes/ Interface	Yes/ Interface
[Community]	public	Yes/ Interface	Yes/ Interface
[User]	rouser	Yes/ Interface	Yes/ Interface
[User Security]	None	Yes/ Interface	Yes/ Interface
[Authentication Protocol]	MD5	Yes/ Interface	Yes/ Interface
[Authentication Passphrase]	mypassword	Yes/ Interface	Yes/ Interface
[Privacy Protocol]	DES	Yes/ Interface	Yes/ Interface
[Privacy Passphrase]	mypassword	Yes/ Interface	Yes/ Interface
[Read-Write]			
[SNMP Version]	Disabled	Yes/ Interface	Yes/ Interface

Setting Item	Initial Value	User Reset	Factory Reset
[Community]	private	Yes/ Interface	Yes/ Interface
[User]	rwuser	Yes/ Interface	Yes/ Interface
[User Security]	None	Yes/ Interface	Yes/ Interface
[Authentication Protocol]	MD5	Yes/ Interface	Yes/ Interface
[Authentication Passphrase]	mypassword	Yes/ Interface	Yes/ Interface
[Privacy Protocol]	DES	Yes/ Interface	Yes/ Interface
[Privacy Passphrase]	mypassword	Yes/ Interface	Yes/ Interface
[Traps]			
[Enable]	Disabled	Yes/ Interface	Yes/ Interface
[SNMP Version]	1	Yes/ Interface	Yes/ Interface
[IP Version]	4	Yes/ Interface	Yes/ Interface
[Destinations]	1	Yes/ Interface	Yes/ Interface
[Destination 1]	0.0.0.0	Yes/ Interface	Yes/ Interface
[Destination 2]	0.0.0.0	Yes/ Interface	Yes/ Interface
[Destination 3]	0.0.0.0	Yes/ Interface	Yes/ Interface
[Community]	trapcom	Yes/ Interface	Yes/ Interface
[User]	trapuser	Yes/ Interface	Yes/ Interface
[Engine ID]	Hex string generated from MAC address	Yes/ Interface	Yes/ Interface

Setting Item	Initial Value	User Reset	Factory Reset
[Security]	None	Yes/ Interface	Yes/ Interface
[Authentication Protocol]	MD5	Yes/ Interface	Yes/ Interface
[Authentication Passphrase]	mypassword	Yes/ Interface	Yes/ Interface
[Privacy Protocol]	DES	Yes/ Interface	Yes/ Interface
[Privacy Passphrase]	mypassword	Yes/ Interface	Yes/ Interface
[Online Services]			
[SOS Mode]	Disabled	No	No
[Allow Remote Control]	Always	No	No
[SOS Association]	-	-	-
[Copy Log Files]	-	-	-
[Contact Information]			
[Phone Number]	-	No	No
[Periodic Notification]			
[Type]	Disabled	No	No
[Counter]	Head	No	No
[Head]	-	-	-
[Meters]	10,000	No	No
[Last Update]	0.0 km	No	No
[Next Update]	10.0 km	No	No
[Current Value]	0.0 km	No	No
[Notifications]	1	No	No
[Weekday]	Sunday	No	No
[Day]	2	No	No
[Time 1]	00:00	No	No
[Time 2]	00:00	No	No

Setting Item	Initial Value	User Reset	Factory Reset
[Time 3]	00:00	No	No
[Time]	00:00	No	No
[Update Screen]	Normal	No	No
[QR code offset]	-	-	-
[SOS Update]	-	-	-
[Advanced]			
[ARP Announcement]			
[Additional]	Enabled	Yes/ Interface	Yes/ Interface
[Periodic]	300 sec	Yes/ Interface	Yes/ Interface
[IEEE1284]			
[Flow Control]	StatusL	Yes/ Interface	Yes/ Interface
[StatusL]	Standard	Yes/ Interface	Yes/ Interface
[BCC]	Disabled	Yes/ Interface	Yes/ Interface
[RS-232C]			
[Baudrate]	115200	Yes/ Interface	Yes/ Interface
[Parameters]	8-N-1	Yes/ Interface	Yes/ Interface
[Flow Control]	StatusL	Yes/ Interface	Yes/ Interface
[StatusL]	Standard	Yes/ Interface	Yes/ Interface
[BCC]	Disabled	Yes/ Interface	Yes/ Interface
[Ignore CR/LF]	Disabled	Yes/ Interface	Yes/ Interface
[Ignore CAN/DLE]	Disabled	Yes/ Interface	Yes/ Interface

[Applications] Menu

The initial value refers to the setting value of the product when it was shipped from the factory. If you reset the product, the setting values of the product will change back to the factory default values. The table below shows the initial value of each setting item and type of reset that changes the value back to the initial value.

- Normally, it is not necessary to perform the initialization. Doing an initialization removes all the product's settings that the customer changed.

Setting Item	Initial Value	User Reset	Factory Reset
[Applicator]			
[Completion Output Time]	200 ms	No	Yes
[Suction Sensor Setting]			
[Sensor Type]	Fiber	No	Yes
[Suction Switching Check Time]	30	No	Yes
[Apply Adjustment]			
[Conveyor Speed]	18	No	Yes
[Apply Position Adjustment Method]	Timing	No	Yes
[Apply Position No.]	01:Name01	No	Yes
[Timing]	0	No	Yes
[Position]	0	No	Yes
[Product Length]	0	No	Yes
[Pressure Bonding Time]	100	No	Yes
[Blowing Time]	100	No	Yes
[Liner Rewinding Adjustment]	30	No	Yes
[Setting 1]	0	No	Yes
[Setting 2]	0	No	Yes
[Setting 3]	0	No	Yes
[Setting 4]	0	No	Yes
[Setting 5]	0	No	Yes
[Warning Lamp]			

Setting Item	Initial Value	User Reset	Factory Reset
[Select Type]	Three Color Lamp with buzzer	No	Yes
[Light/Blink Selection]	Blink	No	Yes
[Display During Offline]	Off	No	Yes
[Notification Display]	Enabled	No	Yes
[Detailed Setting]			
[Delivery Method]			
[Select]	Print and Wait	No	Yes
[CJ/SJ Print and Wait]	Wait at Front End	No	Yes
[Item Completion Condition]	Apply End	No	Yes
[Process at Origin Off]	Error	No	Yes
[Label Remain Error Check Select]	Return to Origin	No	Yes
[Blow Action at PJ Miss]	Disabled	No	Yes
[Idling at Start]	Disabled	No	Yes
[Reset Key Press Display]	Disabled	No	Yes
[Cancel With Reset]	Disabled	No	Yes
[Mechanical Confirmation]			
[Liner Rewinding Confirmation]	Enabled	No	Yes
[Nip Roller Lever Confirmation]	Enabled	No	Yes
[Compatible]			
[LR4800RV Compatible]	Disabled	No	Yes
[Protocol]	SBPL	Yes	Yes
[SBPL]			
[Show Error]	Disabled	Yes	Yes
[Standard Code]	Enabled	Yes	Yes
[Orientation]	Portrait	Yes	Yes
[Font Settings]			

Setting Item	Initial Value	User Reset	Factory Reset
[Zero Slash]	Disabled	Yes	Yes
[Kanji]			
[Kanji Set]	JP-JISX0208	Yes	Yes
[Character Code]	SJIS	Yes	Yes
[Kanji Style]	Gothic	Yes	Yes
[Proportional]	Disabled	Yes	Yes
[Code Page]	X201	Yes	Yes
[€]	d5	Yes	Yes
[Compatible]			
[M-8400 Compatibility]	Disabled	Yes	Yes
[CODE128(C) Zero Fill]	Disabled	Yes	Yes
[Kanji Command]	Disabled	Yes	Yes
[Call Font/Logo]	Disabled	Yes	Yes
[SZPL]			
[Label]			
[Shift]	0 dot	Yes	Yes
[Top]	0 dot	Yes	Yes
[Caret]	94 (^)	Yes	Yes
[Delimiter]	44 (,)	Yes	Yes
[Tilde]	126 (~)	Yes	Yes
[Clock Format]	(none)	Yes	Yes
[Default Font]	(none)	Yes	Yes
[SIPL]			
[Font Settings]			
[Code Page]	1252	Yes	Yes
[New Font Encoding]	Disabled	Yes	Yes
[c20 Proportional Pitch]	Disabled	Yes	Yes

Setting Item	Initial Value	User Reset	Factory Reset
[Zero Slash]	Disabled	Yes	Yes
[Format Save]	Enabled	Yes	Yes
[STCL]			
[Command Head]			
[Control Code]	Auto	Yes	Yes
[1st Byte Code]	27	Yes	Yes
[2nd Byte Code]	10	Yes	Yes
[3rd Byte Code]	0	Yes	Yes
[Font Settings]			
[Zero Slash]	Disabled	Yes	Yes
[€]	d5	Yes	Yes
[Code Page]	850	Yes	Yes
[Half-width Symbol]	Enabled	Yes	Yes
[Rotation]	0 degree	Yes	Yes
[Ignore Paper Size Command]	Disabled	Yes	Yes
[SDPL]			
[Control Code]			
[Code Type]	Standard	Yes	Yes
[SOH]	01	Yes	Yes
[STX]	02	Yes	Yes
[CR]	0D	Yes	Yes
[CNTBY]	5E	Yes	Yes
[Label Rotation]	0 degree	Yes	Yes
[SOP Emulation]	Auto	Yes	Yes
[Compatible Mode]			
[TTF]	Disabled	Yes	Yes
[Graphics]	Disabled	Yes	Yes

Setting Item	Initial Value	User Reset	Factory Reset
[Right-to-Left print]	Auto	Yes	Yes
[Receive TimeOut]	0 (Off)	Yes	Yes
[Blank Item Feed]	Enabled	Yes	Yes
[Prioritize]			
[Format Attribute]	Commands	Yes	Yes
[Pause Mode]	Commands	Yes	Yes
[1 Byte Codepage]	Commands	Yes	Yes
[SDPL Measure Unit]	Commands	Yes	Yes
[Scalable Font Style]	Commands	Yes	Yes
[Sensor Type]	Commands	Yes	Yes
[Feedback Character]	Commands	Yes	Yes
[SOH Commands]	Commands	Yes	Yes
[Darkness]	Commands	Yes	Yes
[Factory Offset]	Commands	Yes	Yes
[Speed]	Commands	Yes	Yes
[Format Attribute]	XOR	Yes	Yes
[Pause Mode]	Disabled	Yes	Yes
[1 Byte Codepage]	CP 850	Yes	Yes
[SDPL Measure Unit]	Inch	Yes	Yes
[Scalable Font Style]			
[Bold]	Disabled	Yes	Yes
[Italic]	Disabled	Yes	Yes
[Feedback Character]	Enabled	Yes	Yes
[SOH Commands]			
[All Commands]	Enabled	Yes	Yes
[SOH-B Command]	Enabled	Yes	Yes
[SOH-C Command]	Enabled	Yes	Yes

Setting Item	Initial Value	User Reset	Factory Reset
[Others]	Enabled	Yes	Yes
[SEPL]			
[Home Reference]			
[Horz. Offset]	0 dot	Yes	Yes
[Vert. Offset]	0 dot	Yes	Yes
[Memory Device]	Internal FLASH	Yes	Yes
[Sim. 300 DPI Head]	Disabled	Yes	Yes
[AEP]			
[Enable]	Disabled	No	Yes
[Starting Application]	Standard Demo (/rom/standalone/sa.lua)	No	Yes
[Delete Application]	-	-	-
[Label Rotation]	Disabled	Yes	Yes

[System] Menu

The initial value refers to the setting value of the product when it was shipped from the factory. If you reset the product, the setting values of the product will change back to the factory default values. The table below shows the initial value of each setting item and type of reset that changes the value back to the initial value.

- Normally, it is not necessary to perform the initialization. Doing an initialization removes all the product's settings that the customer changed.

Setting Item	Initial Value	User Reset	Factory Reset
[Regional]			
[Messages]	English, US	Yes	Yes
[USB Keyboard]	English, US	Yes	Yes
[Locale]	English, US	Yes	Yes
[Unit]	dot	Yes	Yes

Setting Item	Initial Value	User Reset	Factory Reset
[Time]	00:00	No	No
[Date]	(2013-01-01)	No	No
[Time Zone]	-	Yes	Yes
[Region]	Asia	Yes	Yes
[City]	Tokyo	Yes	Yes
[Display Language Icon]	Disabled	Yes	Yes
[Notifications]			
[Clean Printhead]			
[Clean Printhead]	Disabled	Yes	Yes
[Cleaning Interval]	400 m	Yes	Yes
[Change Printhead]			
[Change Printhead]	Disabled	Yes	Yes
[Printhead Interval]	100 km	Yes	Yes
[Change Platen]			
[Change Platen]	Disabled	Yes	Yes
[Platen Interval]	100 km	Yes	Yes
[Sound]			
[Error Sound]	Medium	Yes	Yes
[LCD Brightness]	7	No	Yes
[Show Total Count]	Disabled	Yes	Yes
[Password]			
[Password Enable]	Disabled	No	Yes
[Install Security]	Disabled	No	Yes

[Tools] Menu

The initial value refers to the setting value of the product when it was shipped from the factory. If you reset the product, the setting values of the product will change back to the factory default values. The table below shows the initial value of each setting item and type of reset that changes the value back to the initial value.

- Normally, it is not necessary to perform the initialization. Doing an initialization removes all the product's settings that the customer changed.

Setting Item	Initial Value	User Reset	Factory Reset
[Test Print]			
[Factory]			
[Label Width]	Large	Yes	Yes
[Pitch]	0 dot	No	No
[Offset]	0 dot	No	No
[Darkness Adjust]	50	No	No
[Configure List]			
[Label Width]	Small	-	-
[Label Length]	**203 dpi** 800 dots **305 dpi** 1200 dots	Yes	Yes
[Pitch]	0 dot	No	No
[Offset]	0 dot	No	No
[Darkness Adjust]	50	No	No
[Configure QR]			
[Label Width]	Small	-	-
[Label Length]	**203 dpi** 800 dots **305 dpi** 1200 dots	Yes	Yes
[Pitch]	0 dot	No	No
[Offset]	0 dot	No	No
[Darkness Adjust]	50	No	No
[Paper Sensor]			
[Label Width]	Small	-	-

Setting Item	Initial Value	User Reset	Factory Reset
[Label Length]	**203 dpi** 800 dots **305 dpi** 1200 dots	Yes	Yes
[Pitch]	0 dot	No	No
[Offset]	0 dot	No	No
[Darkness Adjust]	50	No	No
[Head Check]			
[Label Width]	**203 dpi** 832 dots **305 dpi** 1248 dots	Yes	Yes
[Label Length]	**203 dpi** 120 dots **305 dpi** 180 dots	Yes	Yes
[Pitch]	0 dot	No	No
[Offset]	0 dot	No	No
[Darkness Adjust]	50	No	No
[HEX-Dump]			
[Hex Dump Mode]	Disabled	Yes	Yes
[Reset]			
[Profile]			
[Delete]	-	-	-
[Load]	-	-	-
[Save]	-	-	-
[Start with]	-	Yes	Yes
[Certificates]	-	Yes/ Interface	Yes

Setting Item	Initial Value	User Reset	Factory Reset
[Clone]	Excl. LAN/Wi-Fi/IP	-	-
[Support Info]	-	-	-
[Startup Guide]	Disabled	No	Yes

[Information] Menu

The initial value refers to the setting value of the product when it was shipped from the factory. If you reset the product, the setting values of the product will change back to the factory default values. The table below shows the initial value of each setting item and type of reset that changes the value back to the initial value.

- Normally, it is not necessary to perform the initialization. Doing an initialization removes all the product's settings that the customer changed.

Setting Item	Initial Value	User Reset	Factory Reset
[Help]	-	-	-
[Build Version]	-	-	-
[Applications]	-	-	-
[Installation Log]	-	-	-
[Print Module]	-	-	-
[Applicator]	-	-	-
[Counters]	-	-	-
[Head]	-	-	-
[Life]	Measured value	No	No
[Head 1]	Measured value	No	No
[Head 2]	Measured value	No	No
[Head 3]	Measured value	No	No
[Apply]	-	-	-
[Apply]	Measured value	No	No
[Total suction time]	Measured value	No	No

Maintenance

Cleaning the Product

Cleaning

A dirty print head or platen roller not only affects the print quality but also causes errors and malfunctions. Clean the product periodically to keep it running reliably.

- Do not touch the power switch, or connect or disconnect the power cord while your hands are wet. Doing so could cause an electric shock.
- Disconnect the power cord from the AC outlet before you begin cleaning.

  The print head and its surroundings are hot after printing. Wait until the product cools down.
- Touching the edge of the print head with your bare hand could cause injury.
- Use cleaning products for cleaning. Do not clean with a hard object. Doing so could cause damage.
- Before cleaning, remove the media and ribbon.

- The cleaning sheet is an option. Contact your SATO reseller or technical support center to purchase the options.

Cleaning Intervals

Clean the product periodically to keep it running reliably.

Clean the product at the following regular intervals.

- The below cleaning intervals are only for reference. Clean the product when necessary even if you are not at a regular interval.

We recommend cleaning after every roll of media, or in a low-dust environment, after every two rolls of media.

Use the cleaning products to clean the following parts:

- Print head
- Platen roller
- Ribbon feed roller
- Ribbon route
- Suction plate and suction sensor
- Media path
- Media sensor and guide rollers
- Pressure nip roller
- Label damper
- Label near-end sensor
- Ribbon sensor

Cleaning the Print Head

Using the Cleaning Products to Clean

The cleaning procedure using the cleaning products is explained here.

- Never use organic solvents, such as thinner and benzine to clean the product.

1. **Make sure that the product is powered off, and disconnect the power cord from the AC outlet.**

2. **Turn the hand valve (1) to the left (air circuit off).**

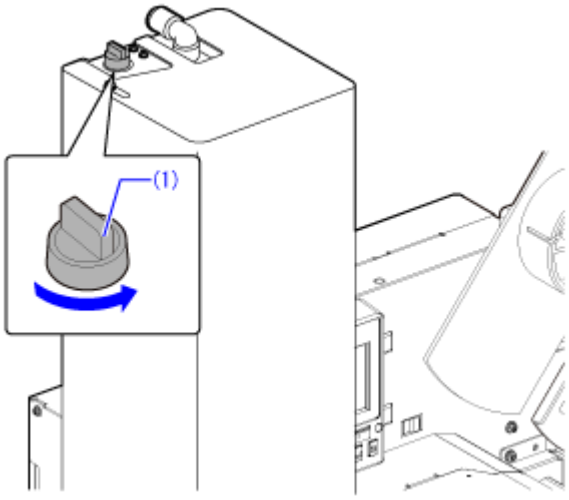

3. **Use your hands to pull out the cylinder (2).**

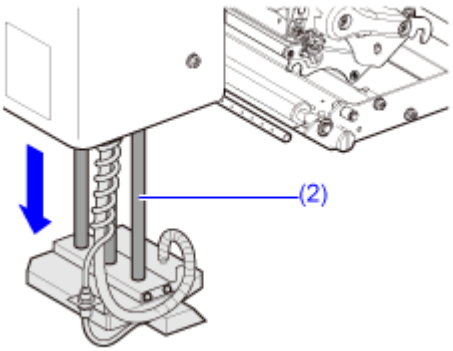

4. **Open the front cover (3).**

- Open the front cover fully to its limit.

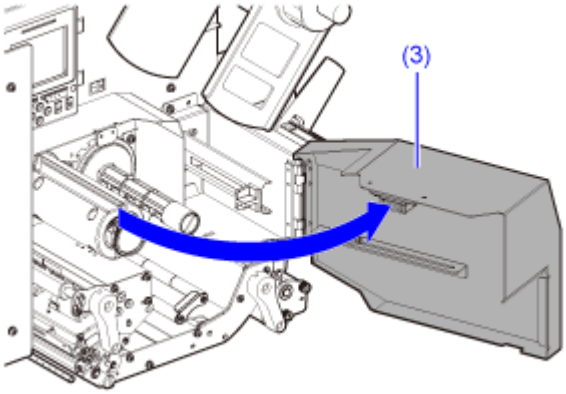

5. Open the head lock lever (4) to release the print head's lock.

- The print head and its surroundings are hot after printing. Be careful not to touch it, to avoid being burned.
- Touching the edge of the print head with your bare hand could cause injury.

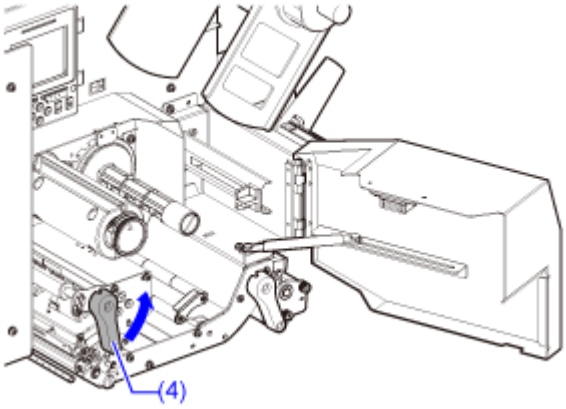

6. Remove the media and ribbon if they are already loaded.

7. **Use cleaning products to wipe off any dirt on the print head (5).**

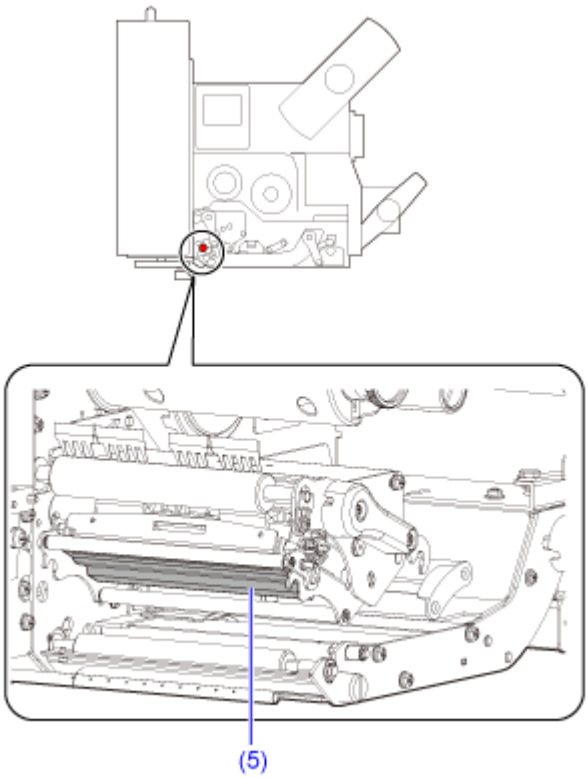

8. **Load the media and ribbon back if you remove them in step 6.**

9. **Close the head lock lever (4).**

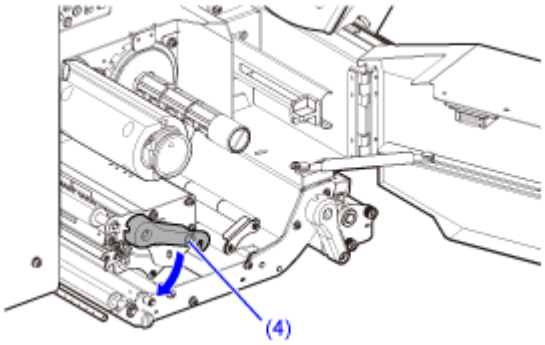

10. **Close the front cover (3).**

- When closing the front cover, be careful not to pinch your fingers.

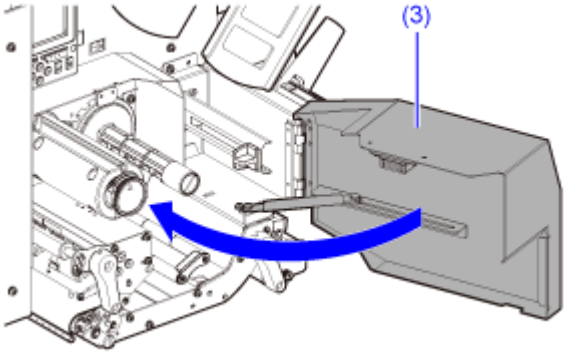

11. Use your hands to return the cylinder (2).

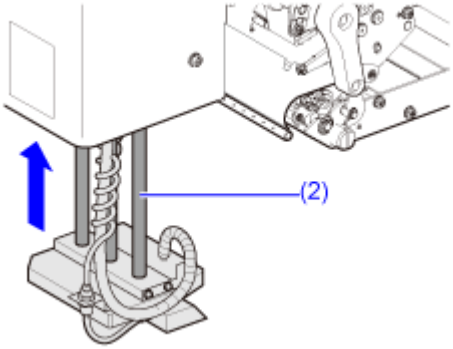

- When returning the cylinder, be careful that you do not pinch your hands between the cylinder cover and the label suction plate.

12. Turn the hand valve (1) to the right (air circuit on).

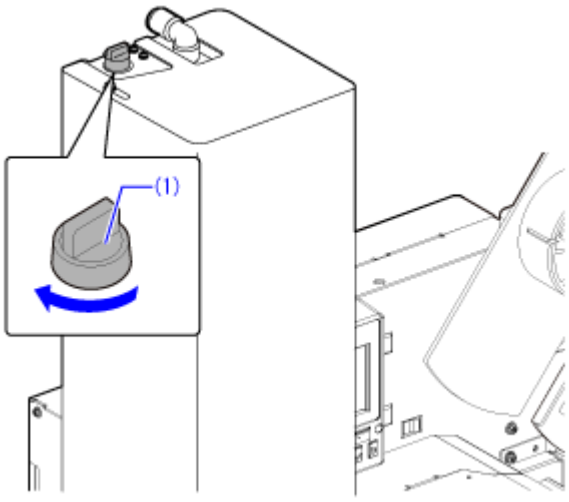

Cleaning Using the Cleaning Sheet (Option)

The cleaning procedure using the cleaning sheet is as follows:

If the print quality is blurry even though you have used the cleaning products to clean the product, try using a cleaning sheet to clean it.

1. **Make sure that the product is powered off, and disconnect the power cord from the AC outlet.**

2. **Turn the hand valve (1) to the left (air circuit off).**

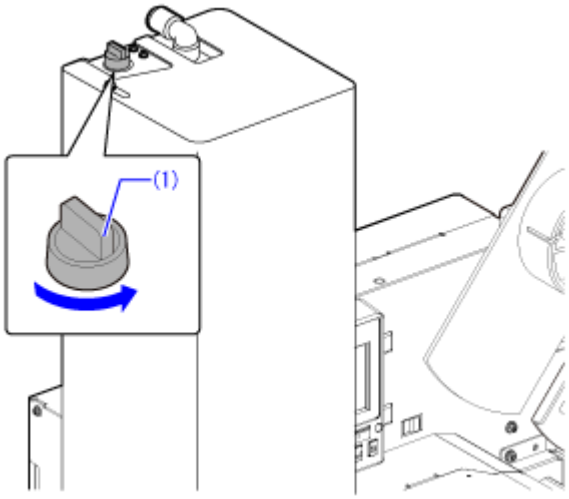

3. **Use your hands to pull out the cylinder (2).**

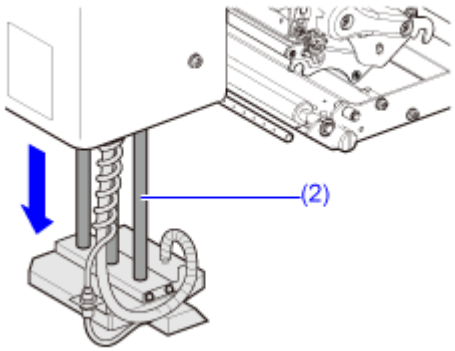

4. **Open the front cover (3).**

- Open the front cover fully to its limit.

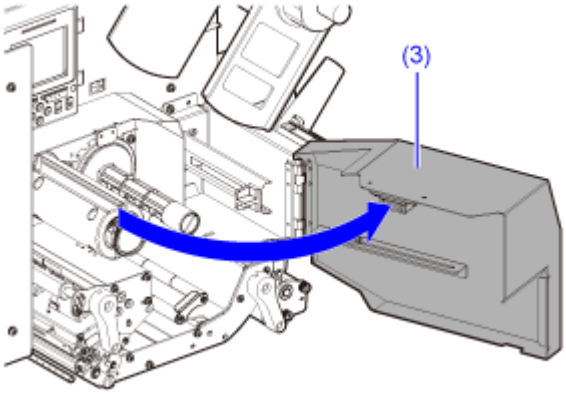

5. Open the head lock lever (4) to release the print head's lock.

- The print head and its surroundings are hot after printing. Be careful not to touch it, to avoid being burned.
- Touching the edge of the print head with your bare hand could cause injury.

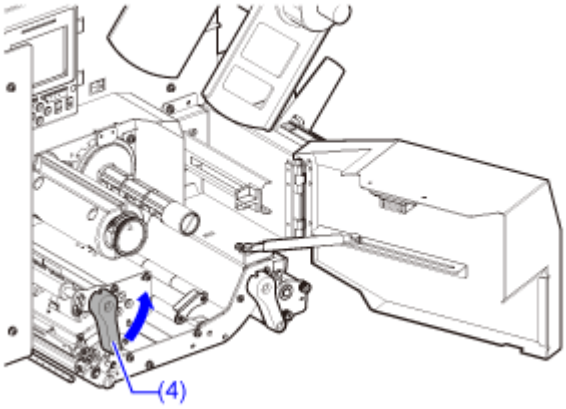

6. Remove the media and ribbon if they are already loaded.

7. Place the cleaning sheet (7) between the print head (5) and the platen roller (6).

- Align the rough side of the cleaning sheet adjacent to the print head.

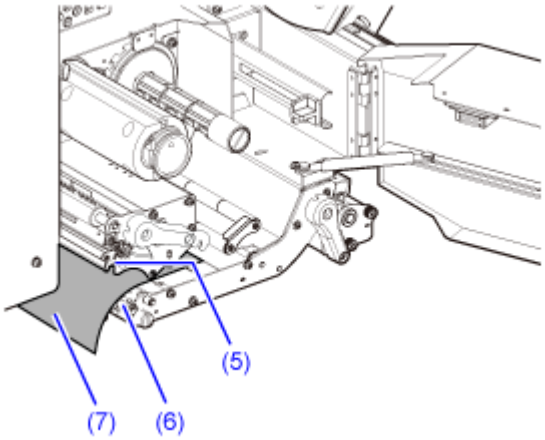

8. Close the head lock lever (4) to lock the print head.

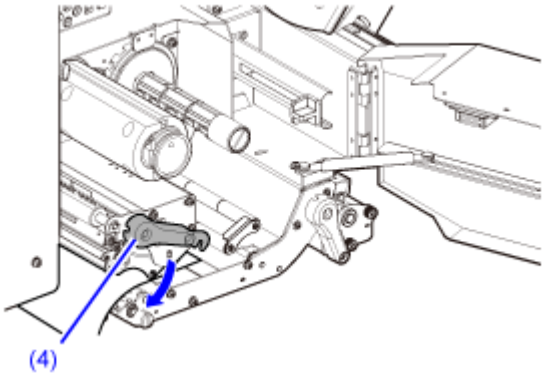

9. Using two hands, pull the cleaning sheet (7) away from the product.

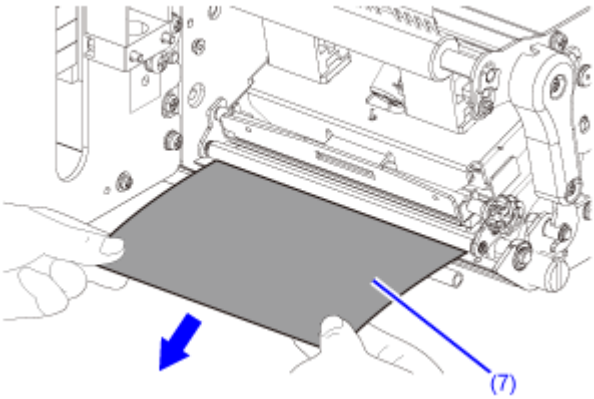

10. After you pull out the cleaning sheet, repeat steps 7 through 9, two or three more times.

When no more dirt appears on the cleaning sheet after you have pulled it out, stop repeating these steps.

11. Open the head lock lever (4) to release the print head's lock.

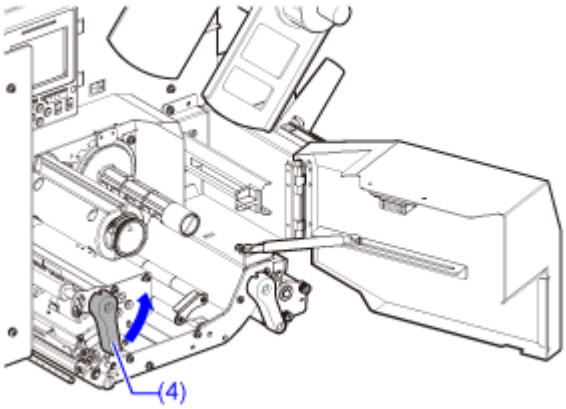

12. Use cleaning products to remove any dirt stuck to the print head (5).

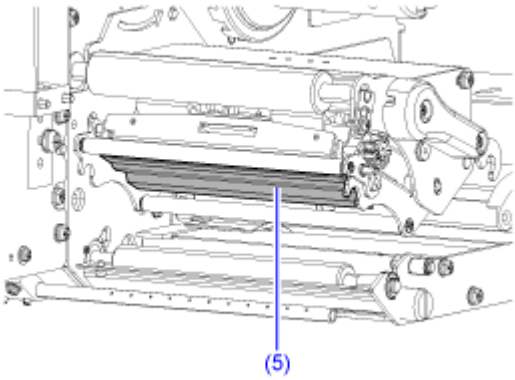

13. Load the media and ribbon back if you remove them in step 6.

14. Close the head lock lever (4) to lock the print head.

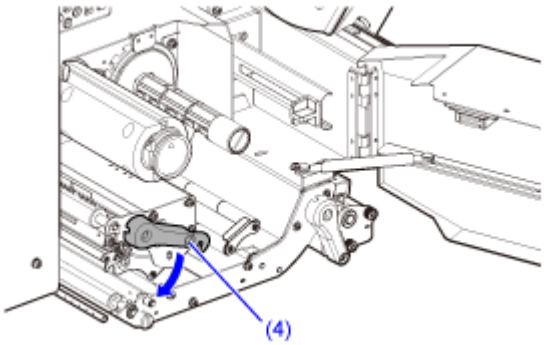

15. Close the front cover (3).

- When closing the front cover, be careful not to pinch your fingers.

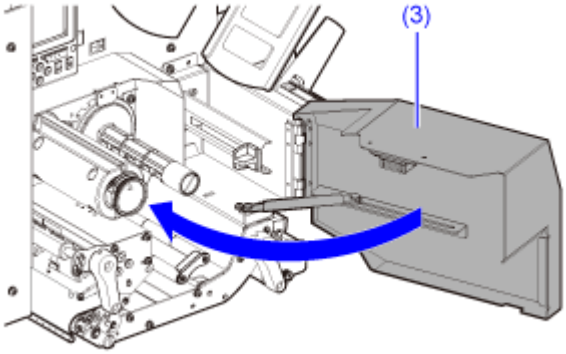

16. Use your hands to return the cylinder (2).

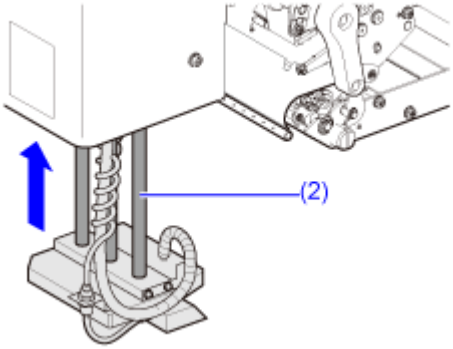

- When returning the cylinder, be careful that you do not pinch your hands between the cylinder cover and the label suction plate.

17. Turn the hand valve (1) to the right (air circuit on).

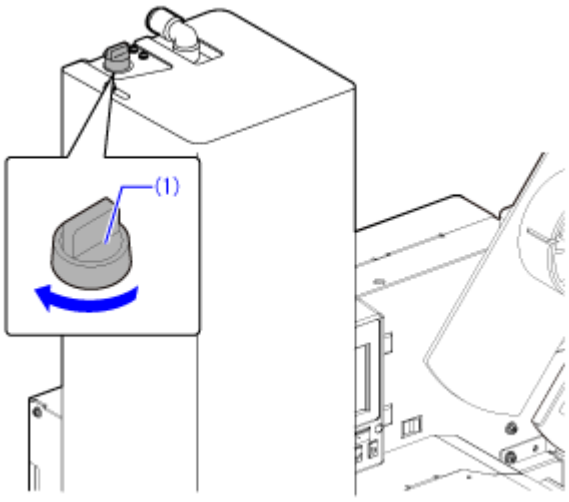

Cleaning the Platen Roller

The cleaning procedure for the platen roller is explained here.

- Never use organic solvents, such as thinner and benzine to clean the product.

1. **Make sure that the product is powered off, and disconnect the power cord from the AC outlet.**

2. **Turn the hand valve (1) to the left (air circuit off).**

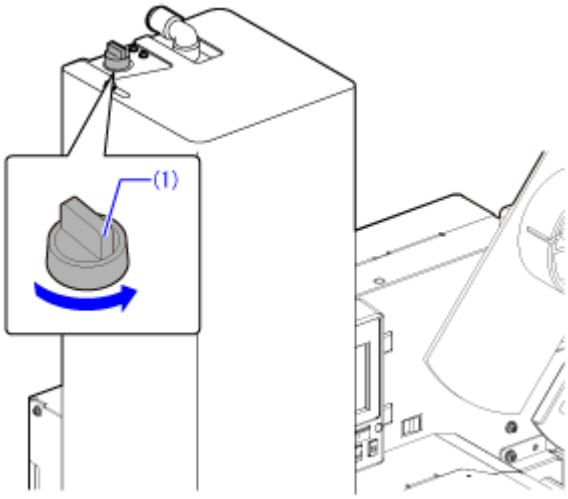

3. **Use your hands to pull out the cylinder (2).**

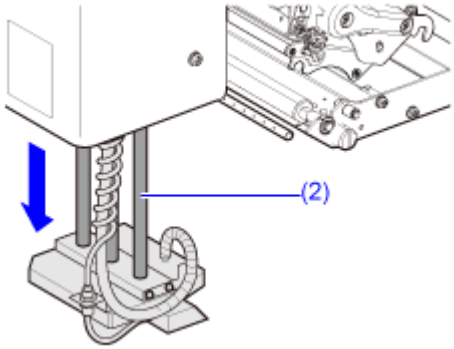

4. **Open the front cover (3).**

- Open the front cover fully to its limit.

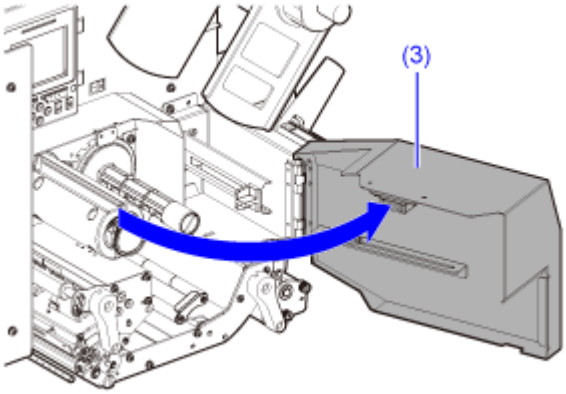

5. Open the head lock lever (4) to release the print head's lock.

- The print head and its surroundings are hot after printing. Be careful not to touch it, to avoid being burned.
- Touching the edge of the print head with your bare hand could cause injury.

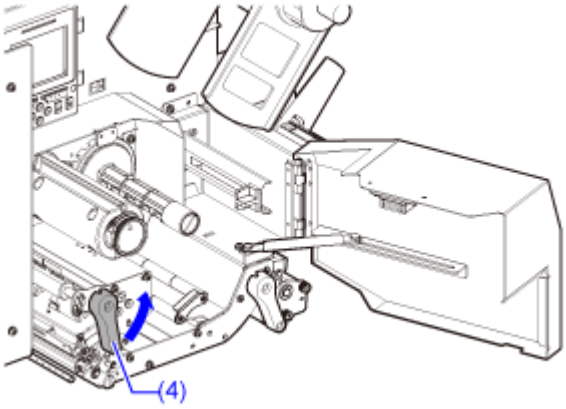

6. Remove the media and ribbon if they are already loaded.

7. **Use cleaning products to wipe off any dirt on the platen roller (5).**

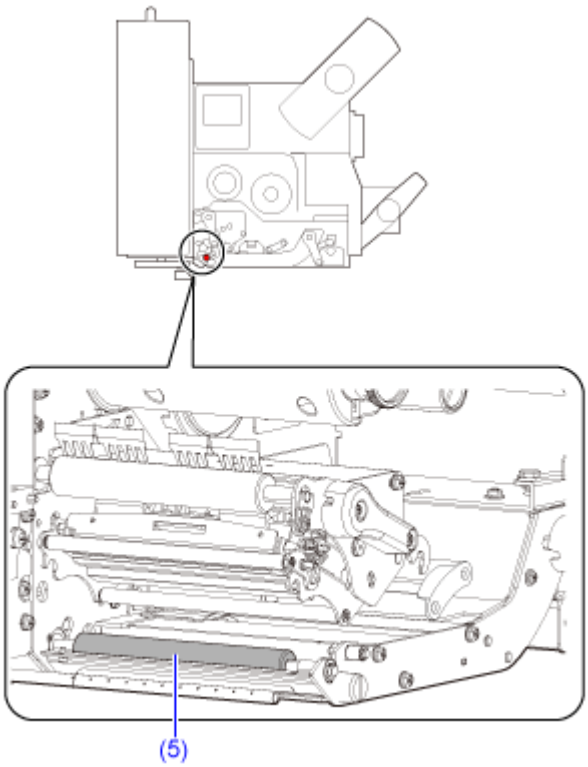

8. **Load the media and ribbon back if you remove them in step 6.**

9. **Close the head lock lever (4).**

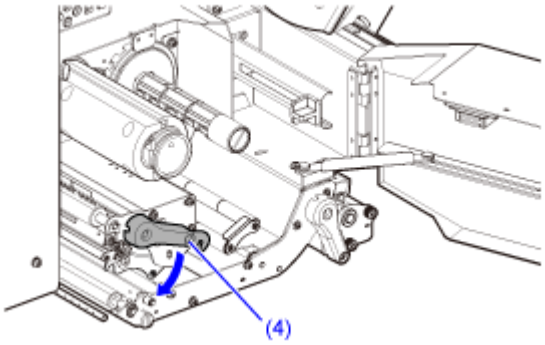

10. **Close the front cover (3).**

- When closing the front cover, be careful not to pinch your fingers.

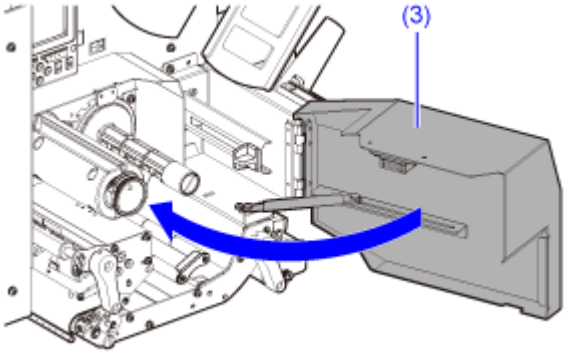

11. Use your hands to return the cylinder (2).

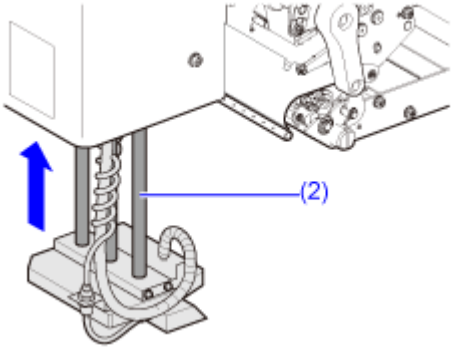

- When returning the cylinder, be careful that you do not pinch your hands between the cylinder cover and the label suction plate.

12. Turn the hand valve (1) to the right (air circuit on).

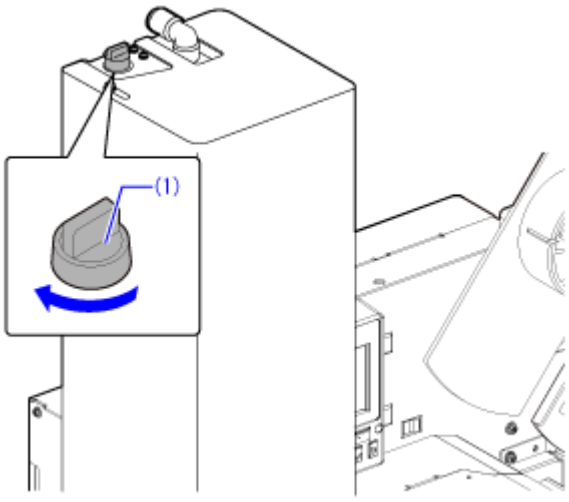

Cleaning the Pressure Nip Roller

The cleaning procedure for the pressure nip roller is explained here.

- Do not touch the power switch, or connect or disconnect the power cord while your hands are wet. Doing so could cause an electric shock.
- Disconnect the power cord from the AC outlet before you clean the pressure nip roller.

1. **Make sure that the product is powered off, and disconnect the power cord from the AC outlet.**
2. **Open the front cover (1).**

- Open the front cover fully to its limit.

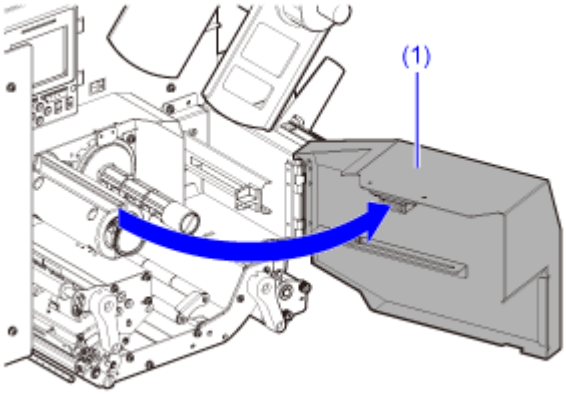

3. **Open the nip lock lever (2) to unlock it.**

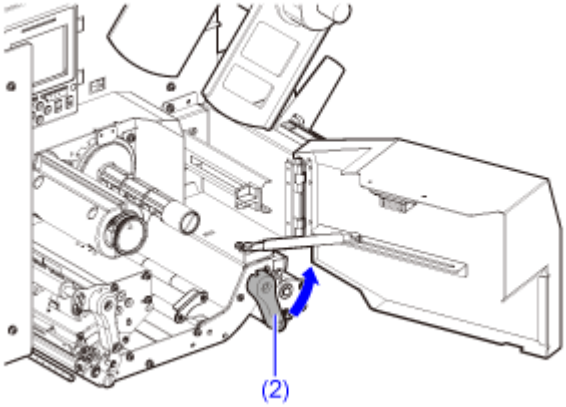

4. **Remove the media and ribbon if they are already loaded.**

5. Remove the mounting screw (4) for the pressure nip roller (3), and then slide the pressure nip roller (3) towards you to remove it.

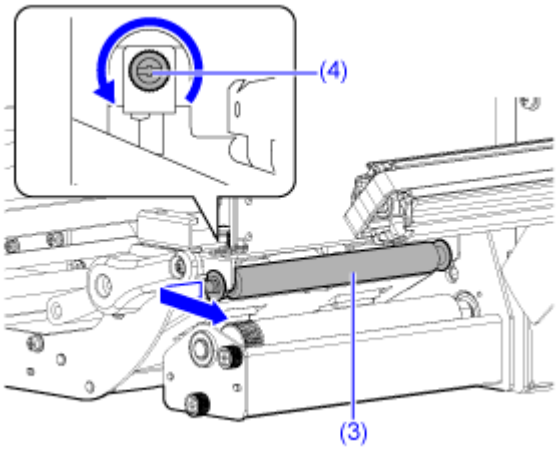

6. Use cleaning products to wipe off any dirt on the pressure nip roller (3).

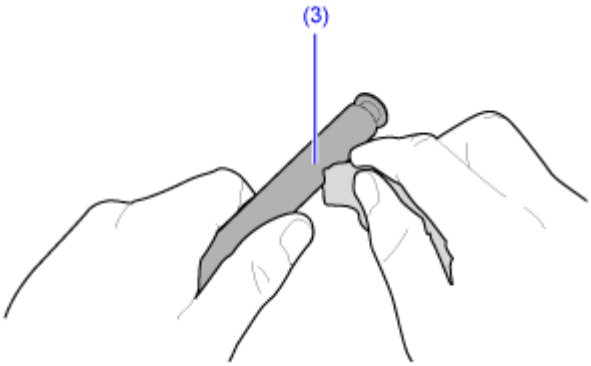

7. Install the pressure nip roller (3).

a. Insert the groove on the pressure nip roller (3) into the notch on the front mounting bracket, and then press the pressure nip roller in the direction A.

- Be sure to install the pressure nip roller (3) onto the product in the orientation shown below.

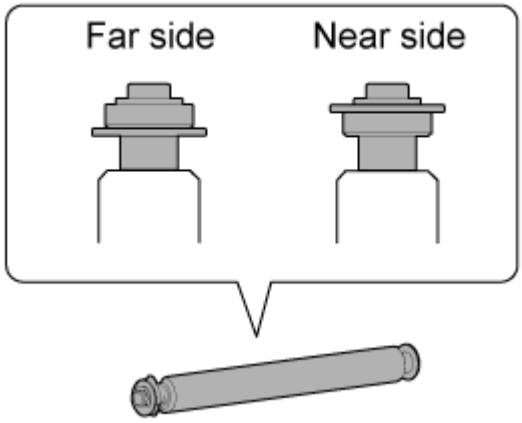

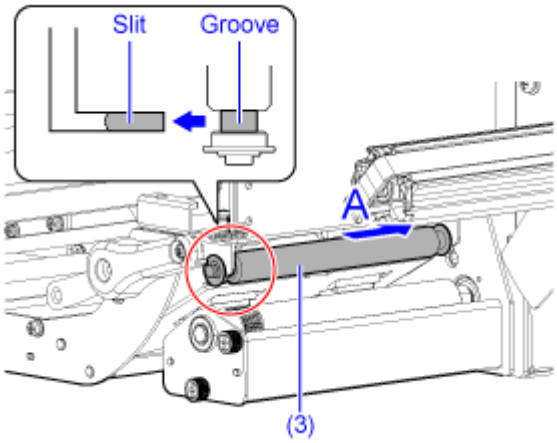

b. Fasten with the mounting screw (4).

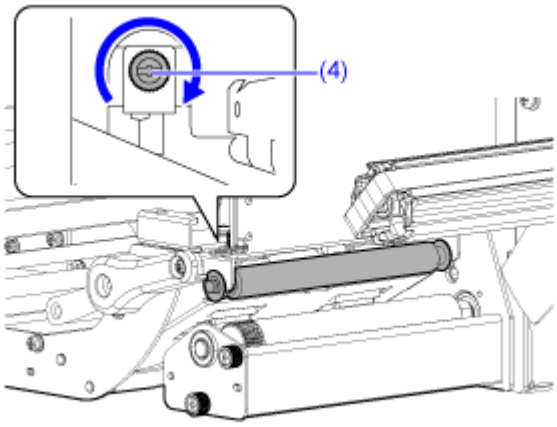

8. Load the media and ribbon back if you remove them in step 4.

9. Close the nip lock lever (2).

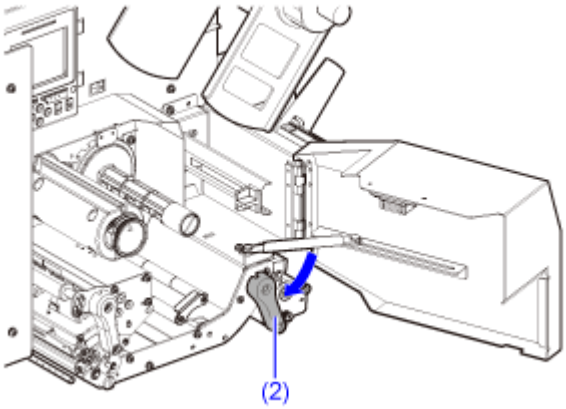

10. Close the front cover (1).

- When closing the front cover, be careful not to pinch your fingers.

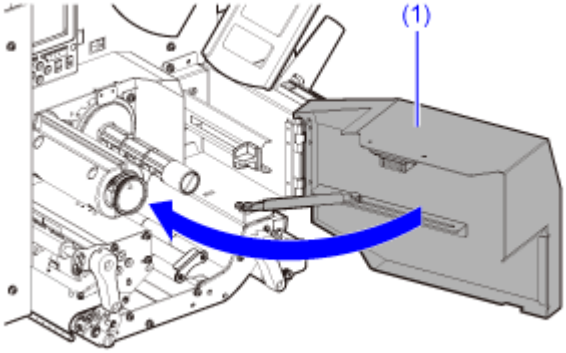

Cleaning the Suction Plate, Media and Ribbon Rollers

The cleaning procedure for the suction plate, media and ribbon rollers is explained here.

- Do not touch the power switch, or connect or disconnect the power cord while your hands are wet. Doing so could cause an electric shock.
- Disconnect the power cord from the AC outlet before you clean the suction components.

1. **Make sure that the product is powered off, and disconnect the power cord from the AC outlet.**
2. **Use cleaning products and compressed air to clean dirt off the suction plate (1) and suction sensor (2) on the lower part of the product.**

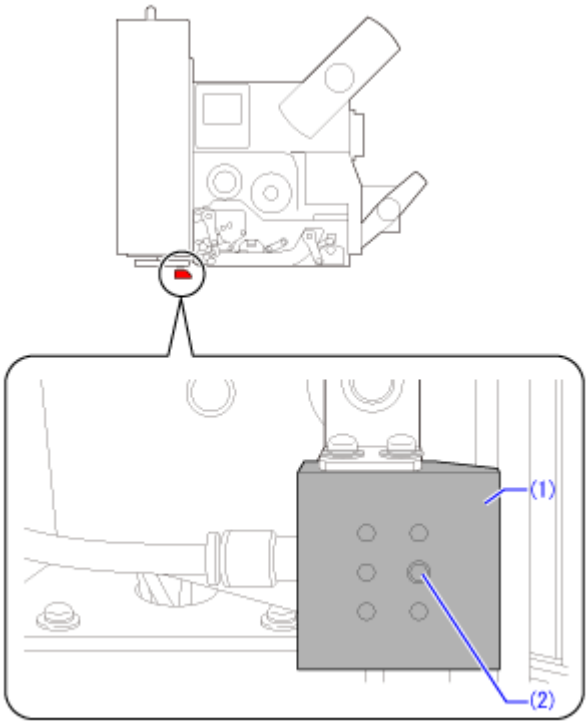

3. **Turn the hand valve (3) to the left (air circuit off).**

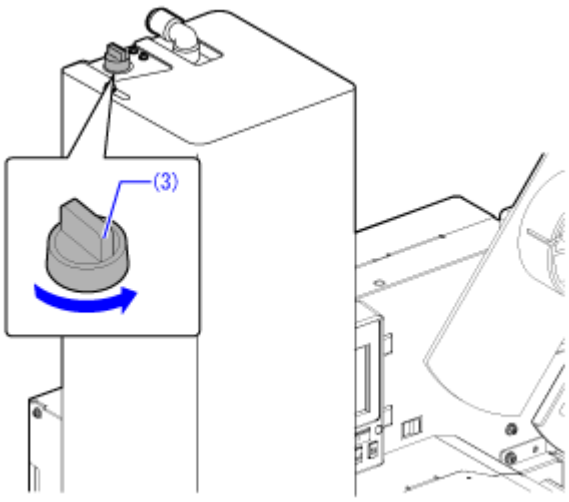

4. **Use your hands to pull out the cylinders (4).**

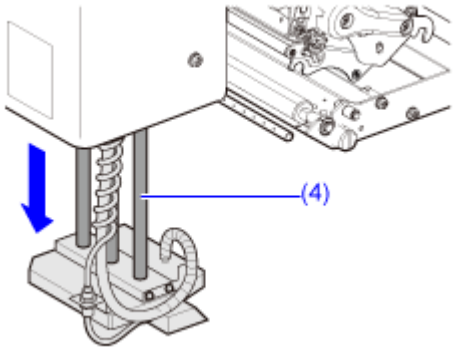

5. **Open the front cover (5).**

- Open the front cover fully to its limit.

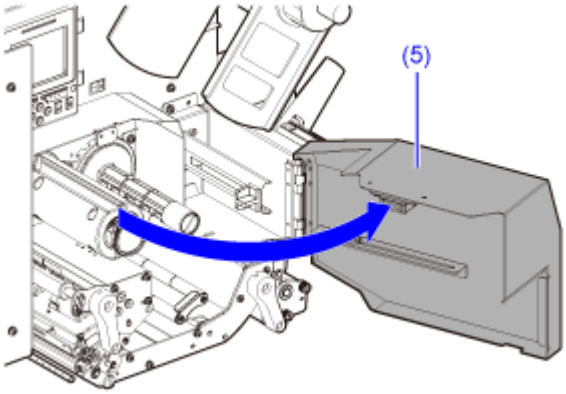

6. **Open the head lock lever (6) to release the print head's lock.**

- The print head and its surroundings are hot after printing. Be careful not to touch it, to avoid being burned.
- Touching the edge of the print head with your bare hand could cause injury.

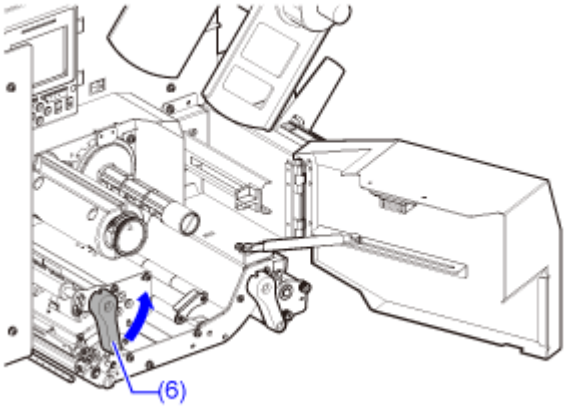

7. **Remove the media and ribbon if they are already loaded.**
8. **Use cleaning products to wipe off any dirt on the ribbon feed roller (7).**

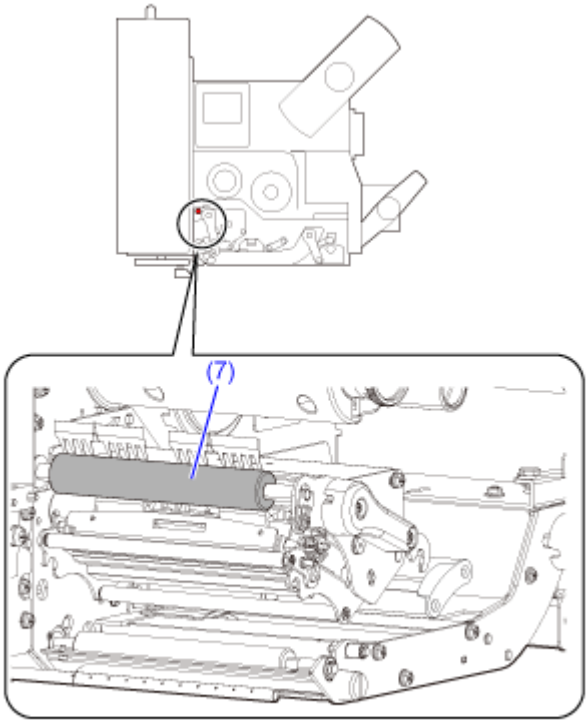

9. **Use cleaning products to clean the ribbon rollers (8).**

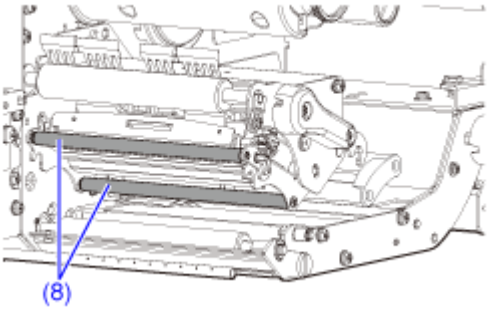

10. **Use cleaning products and compressed air to clean the assist blow nozzle (9) and dispenser plate (10).**

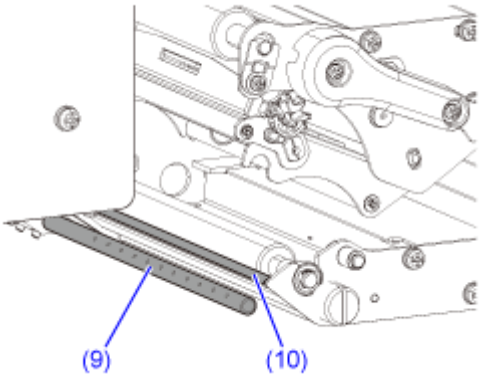

11. **Use cleaning products to clean the media path (11).**

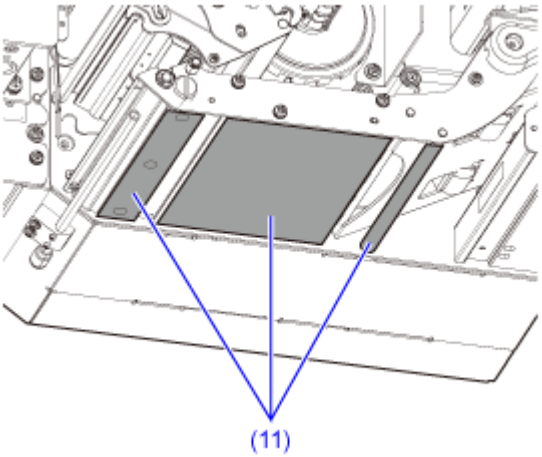

12. Clean the media sensor (12) with cleaning products and compressed air.

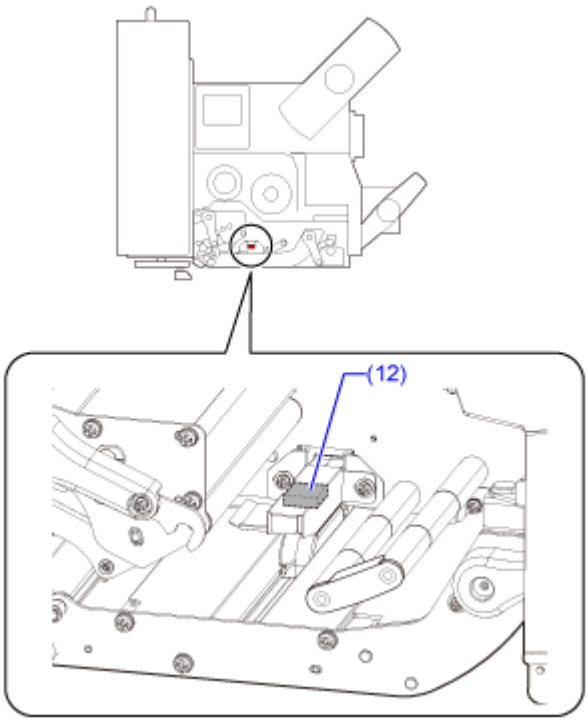

13. Use cleaning products to clean the guide roller (13).

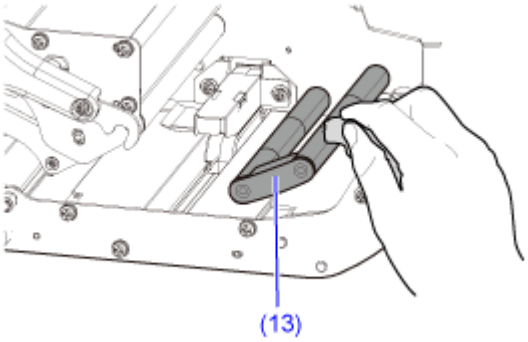

14. Use cleaning products and compressed air to clean the ribbon sensor (14), label near-end sensor (15) and label damper (16).

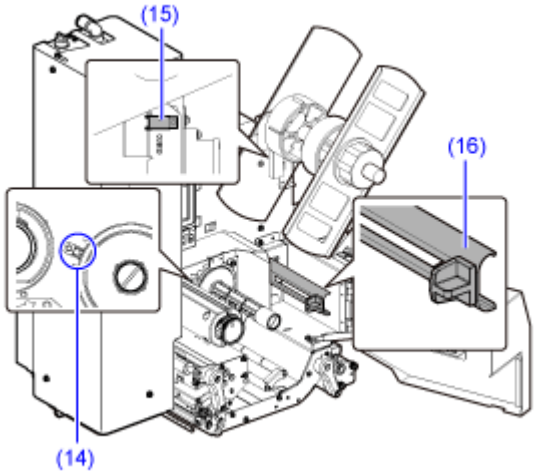

15. Load the media and ribbon back if you remove them in step 7.

16. Close the head lock lever (6).

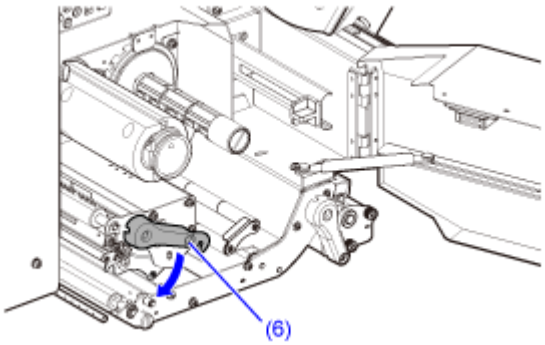

17. Close the front cover (5).

- When closing the front cover, be careful not to pinch your fingers.

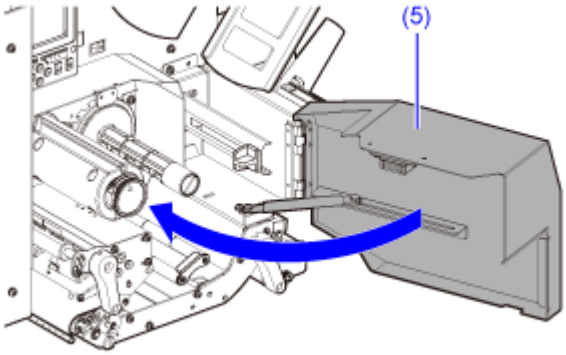

18. Use your hands to return the cylinders (4).

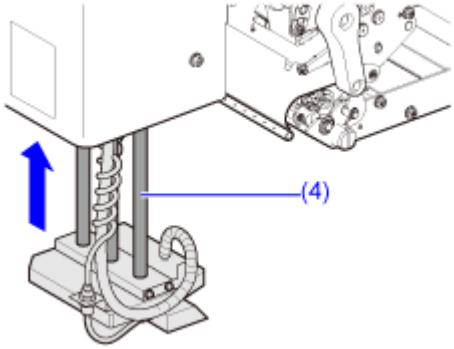

- When returning the cylinder, be careful that you do not pinch your hands between the cylinder cover and the label suction plate.

19. Turn the hand valve (3) to the right (air circuit on).

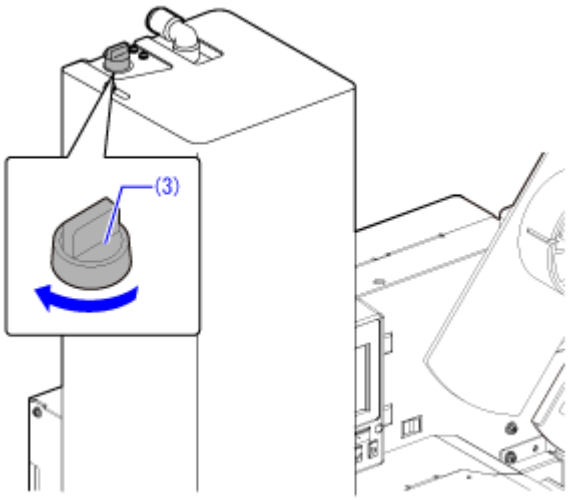

Replacing Consumable Parts

Replacing the Print Head

You can easily remove and replace a damaged or worn print head.

- Do not touch the power switch, or connect or disconnect the power cord while your hands are wet. Doing so could cause an electric shock.
- Disconnect the power cord from the AC outlet before you replace the print head.
- Wear gloves before replacing the print head, to prevent damage to the print head.

1. **Make sure that the product is powered off, and disconnect the power cord from the AC outlet.**
2. **Turn the hand valve (1) to the left (air circuit off).**

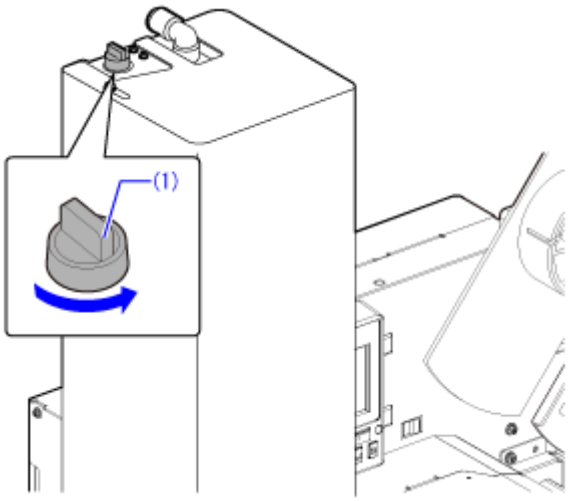

3. **Use your hands to pull out the cylinder (2).**

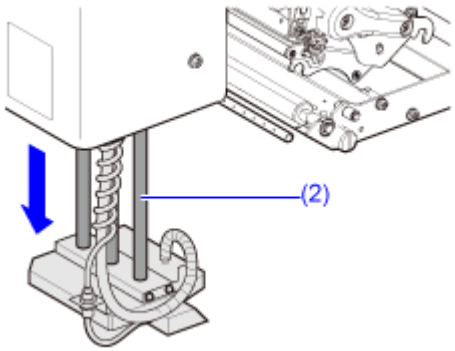

4. **Open the front cover (3).**

- Open the front cover fully to its limit.

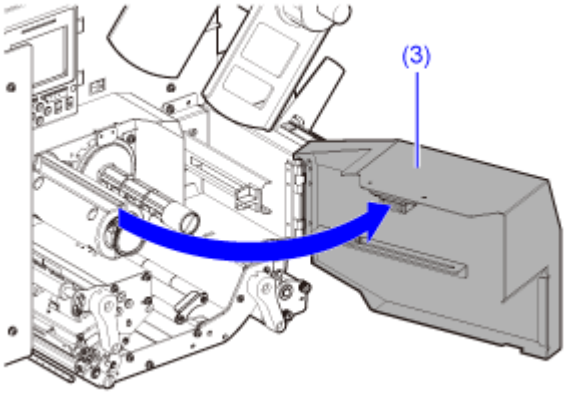

5. **Open the head lock lever (4) to release the print head's lock.**

- The print head and its surroundings are hot after printing. Be careful not to touch it, to avoid being burned.
- Touching the edge of the print head with your bare hand could cause injury.

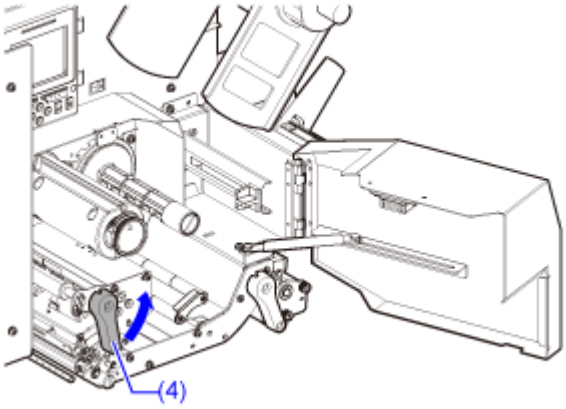

6. **Remove the media and ribbon if they are already loaded.**
7. **Press the lever (5) to remove the print head (6).**

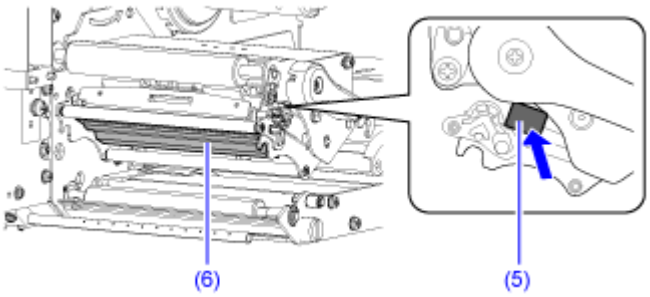

8. Disconnect all the connectors (7) from the print head (6).

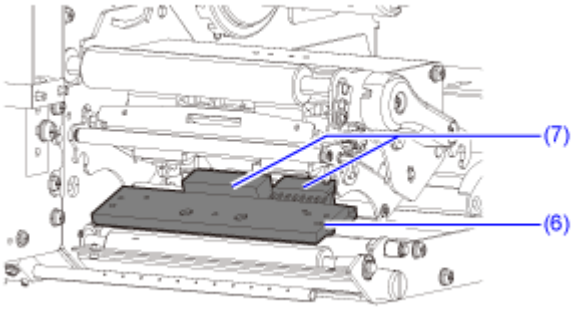

There are two connectors.

9. Connect all the connectors (7) to the new print head (6).

- Handle the print head with care. Do not contaminate or scratch the sensitive print head surface.

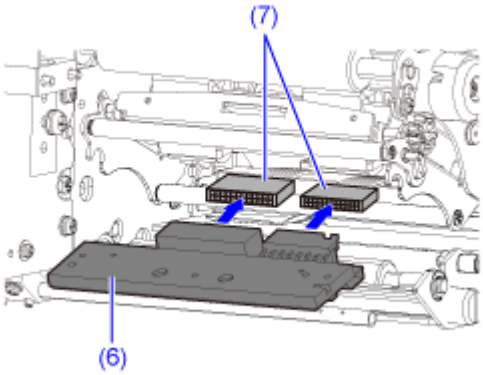

10. Install the new print head (6) onto the product.

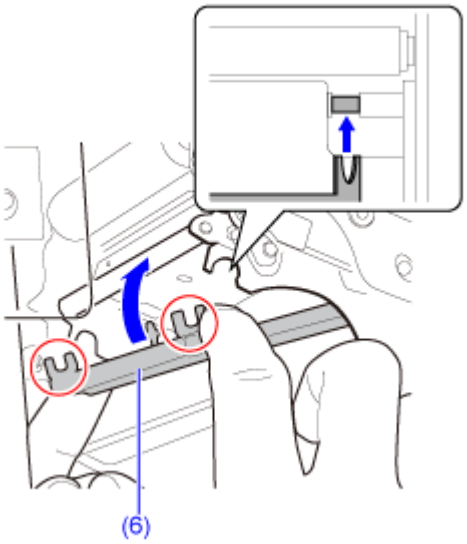

To install the print head, firmly press the notches on both ends of the print head against the mount until they click so the print head is locked.

- If the cables from the connectors (7) are poking out, push them back in.

11. Load the media and ribbon back if you remove them in step 6.

12. Close the head lock lever (4).

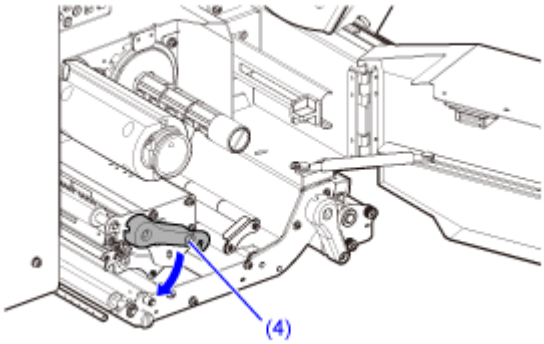

13. Close the front cover (3).

- When closing the front cover, be careful not to pinch your fingers.

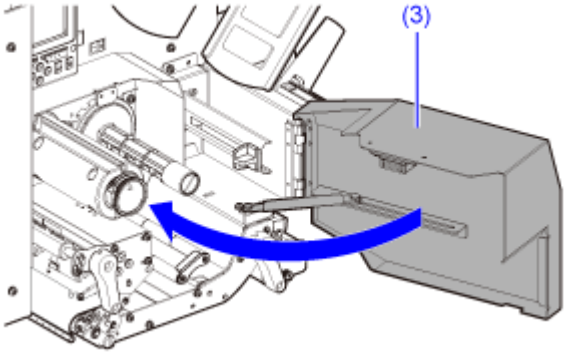

14. Use your hands to return the cylinder (2).

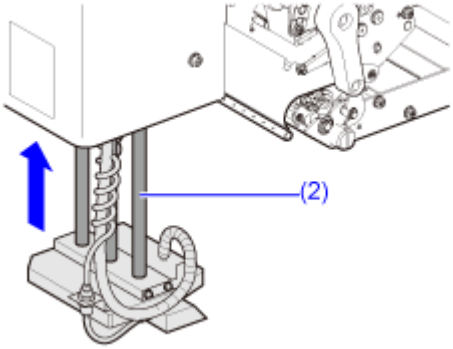

- When returning the cylinder, be careful that you do not pinch your hands between the cylinder cover and the label suction plate.

15. Turn the hand valve (1) to the right (air circuit on).

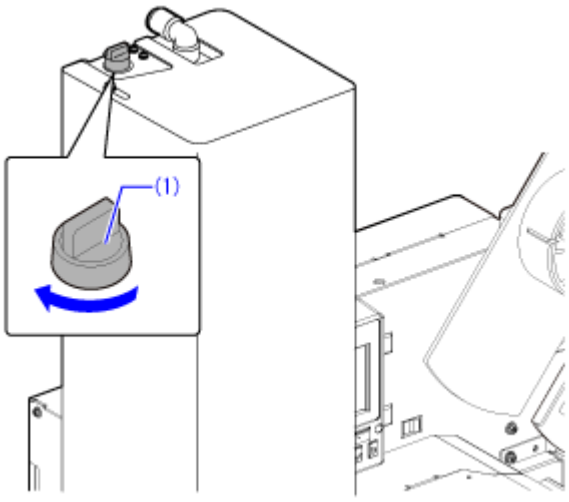

Replacing the Platen Roller

You can easily remove and replace a damaged or worn platen roller.

- Do not touch the power switch, or connect or disconnect the power cord while your hands are wet. Doing so could cause an electric shock.
- Disconnect the power cord from the AC outlet before you replace the platen roller.

1. **Make sure that the product is powered off, and disconnect the power cord from the AC outlet.**

2. **Turn the hand valve (1) to the left (air circuit off).**

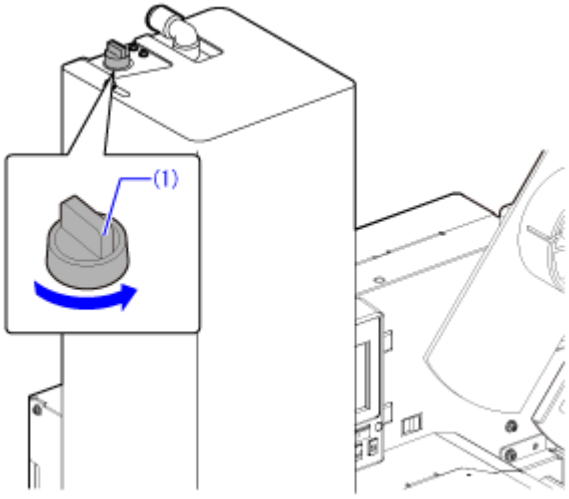

3. **Use your hands to pull out the cylinder (2).**

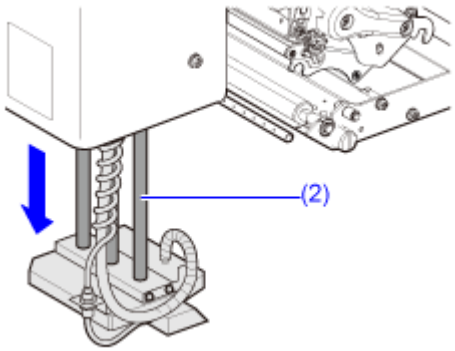

4. **Open the front cover (3).**

- Open the front cover fully to its limit.

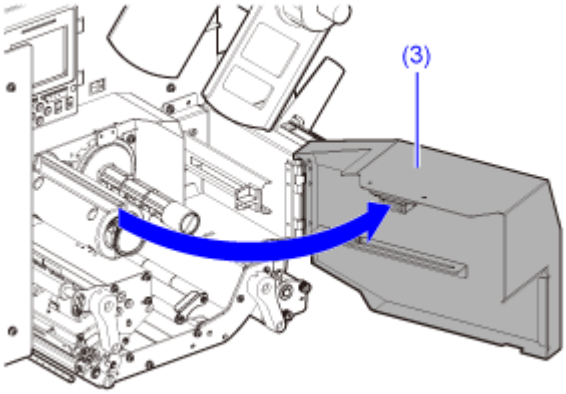

5. Open the head lock lever (4) to release the print head's lock.

- The print head and its surroundings are hot after printing. Be careful not to touch it, to avoid being burned.
- Touching the edge of the print head with your bare hand could cause injury.

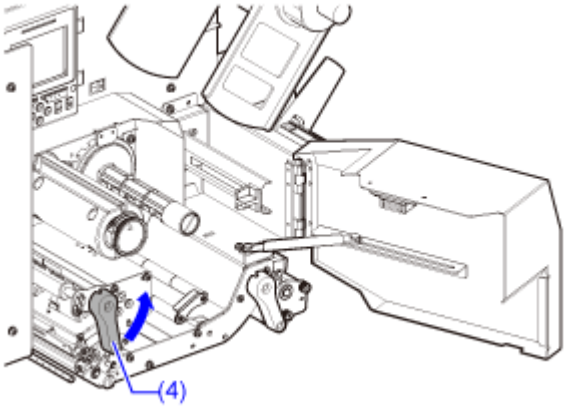

6. Remove the media and ribbon if they are already loaded.

7. **Turn the mounting screw (5) for the platen roller in the direction of the arrow to loosen it.**

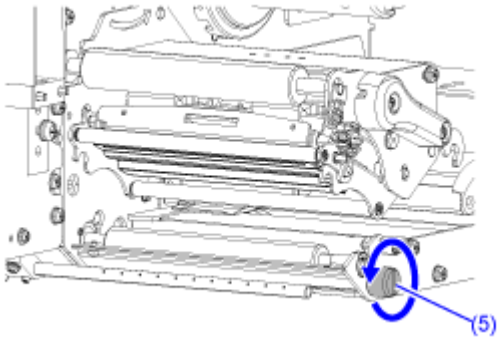

8. **Pull out the platen roller (6) in direction A, and then lift it in direction B to remove it.**

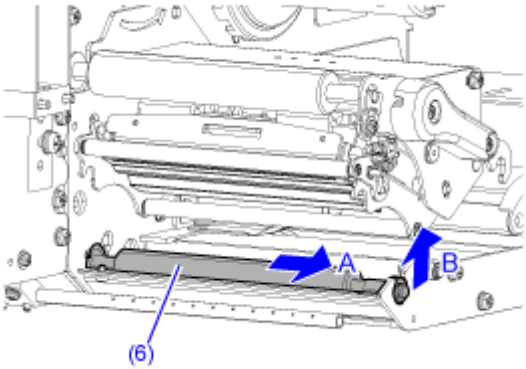

9. **Install the new platen roller.**

a. Press the platen roller in the direction C, lower the shaft and position it, then press in again in the direction C.

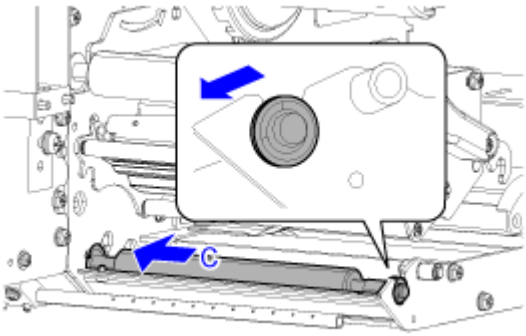

If you cannot securely position the platen roller, rotate it as you press it in to make it easier to position it.

b. Install the mounting screw (5) of the platen roller back in its original position.

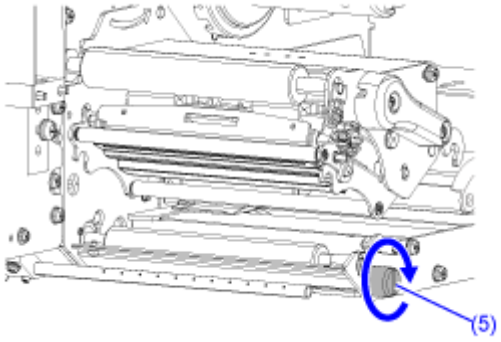

10. Load the media and ribbon back if you remove them in step 6.

11. Close the head lock lever (4) to lock the print head.

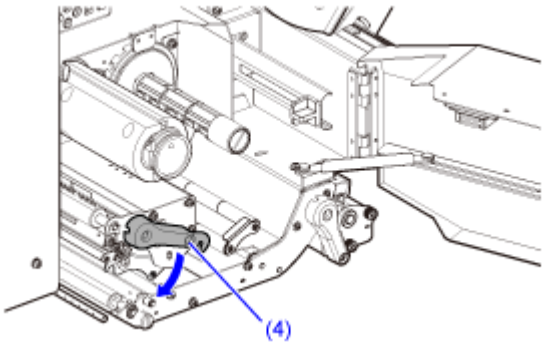

12. Close the front cover (3).

- When closing the front cover, be careful not to pinch your fingers.

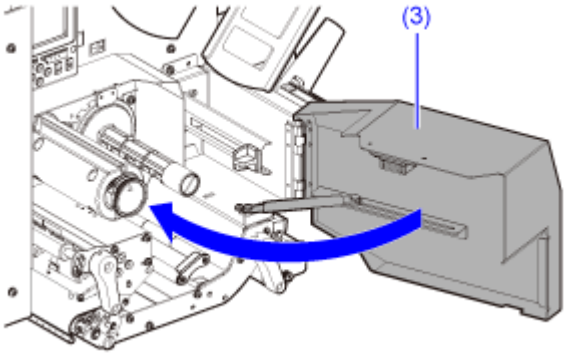

13. Use your hands to return the cylinder (2).

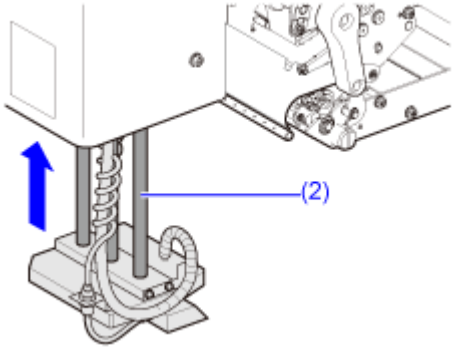

- When returning the cylinder, be careful that you do not pinch your hands between the cylinder cover and the label suction plate.

14. Turn the hand valve (1) to the right (air circuit on).

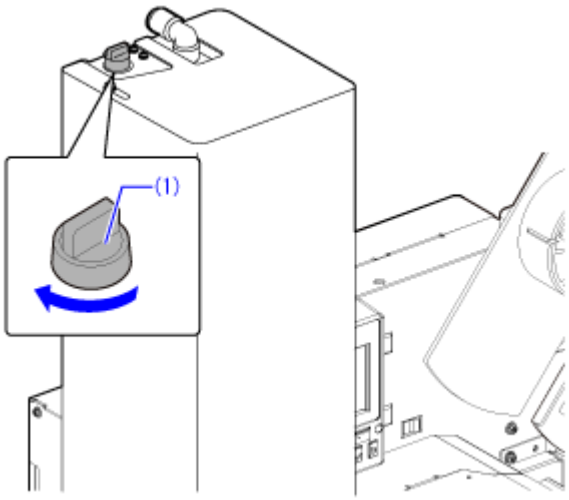

Replacing the Nip Roller

You can easily remove and replace a damaged or worn nip roller.

- Do not touch the power switch, or connect or disconnect the power cord while your hands are wet. Doing so could cause an electric shock.
- Disconnect the power cord from the AC outlet before you replace the nip roller.

1. **Make sure that the product is powered off, and disconnect the power cord from the AC outlet.**
2. **Open the front cover (1).**

- Open the front cover fully to its limit.

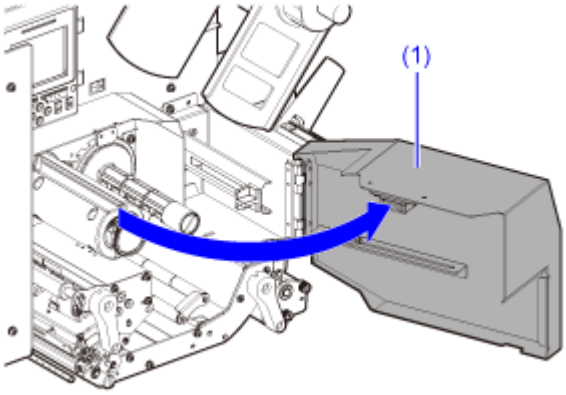

3. **Open the nip lock lever (2) to unlock it.**

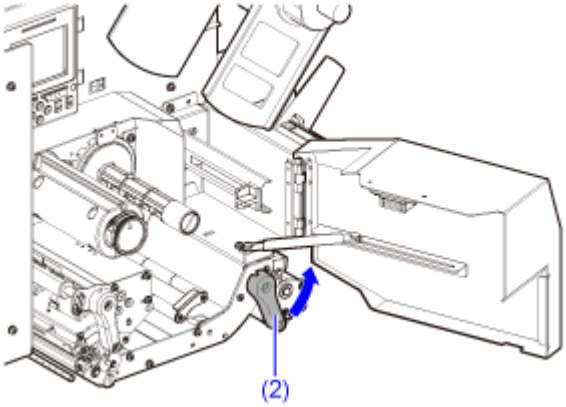

4. **Remove the media and ribbon if they are already loaded.**

5. **Turn the two mounting screws (3) for the nip roller in the direction of the arrow to loosen them.**

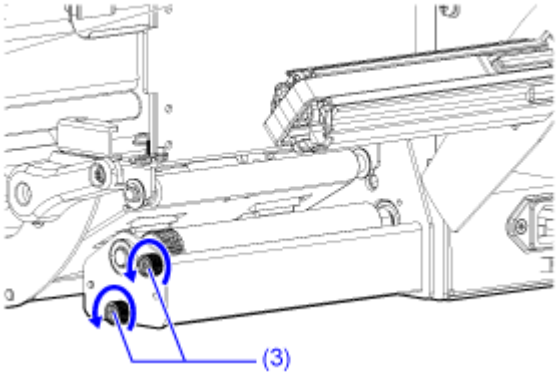

6. **Pull the side plate (4) away towards you.**

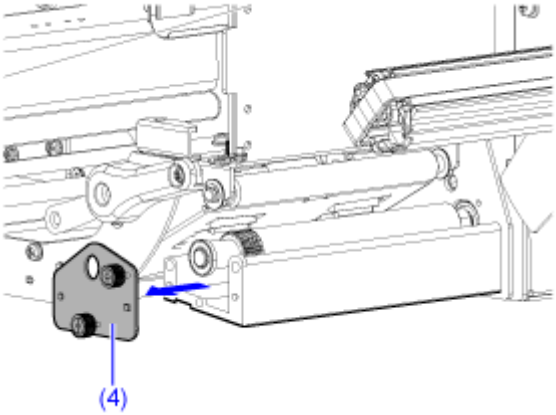

7. **Pull the nip roller (5) and bearings (6) away towards you.**

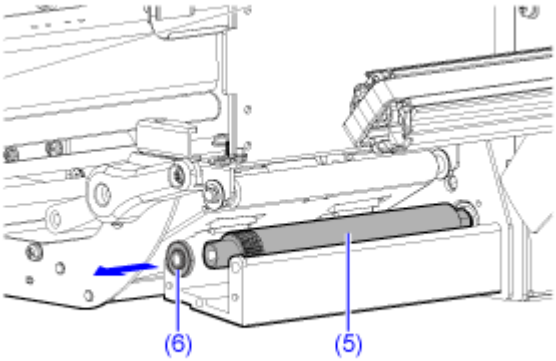

8. **Install the new nip roller (5).**

a. Push the nip roller in the direction B so that the notch (7) in the end of the nip roller (5) secures the protruding the nip roller shaft (8).

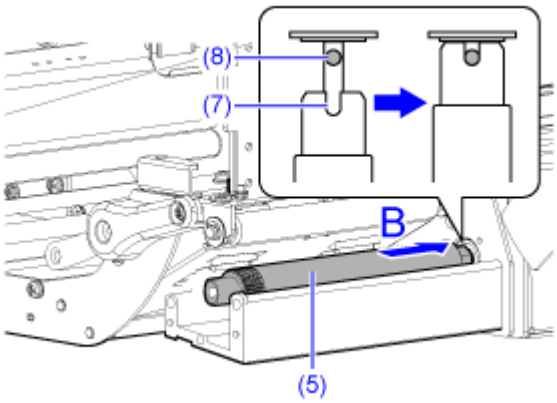

b. Install the bearing (6) on the new nip roller shaft (8).

Install the bearing in the correct orientation.

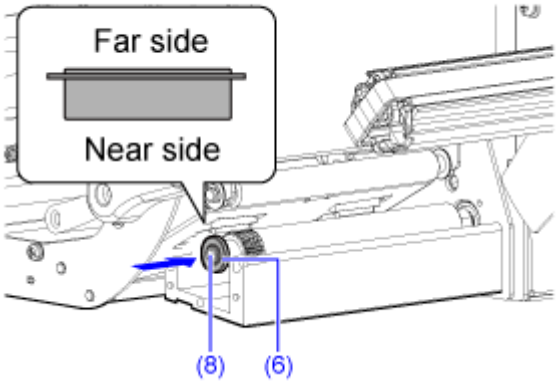

9. Attach the side plate (4) in its original position, and then turn the two mounting screws (3) for the nip roller in the direction of the arrow to firmly fasten it.

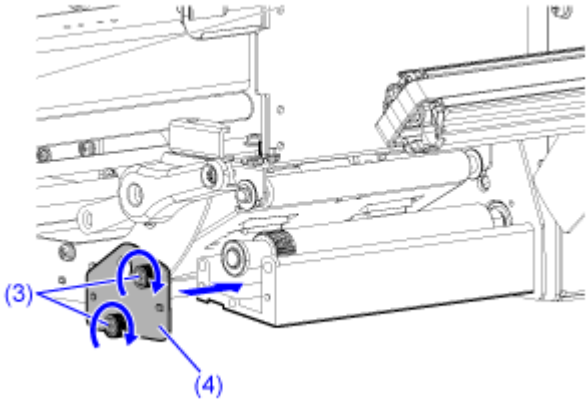

If you cannot attach the side plate, check whether the nip roller and the bearing are installed correctly.

10. Load the media and ribbon back if you remove them in step 4.

11. Close the nip lock lever (2).

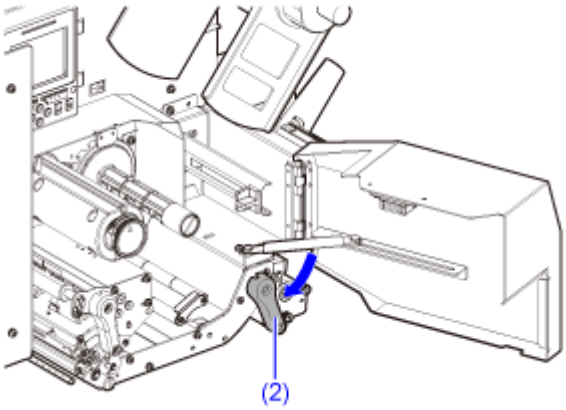

12. Close the front cover (1).

- When closing the front cover, be careful not to pinch your fingers.

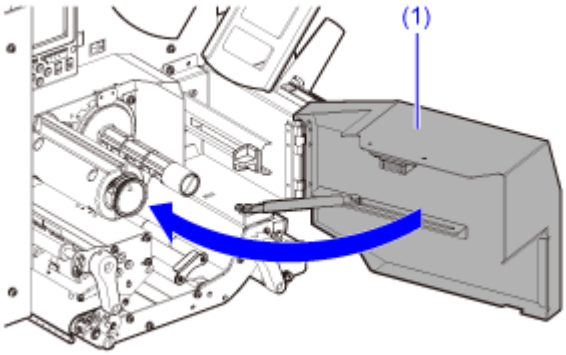

Replacing the Pressure Nip Roller

You can easily remove and replace a damaged or worn pressure nip roller.

- Do not touch the power switch, or connect or disconnect the power cord while your hands are wet. Doing so could cause an electric shock.
- Disconnect the power cord from the AC outlet before you replace the pressure nip roller.

1. **Make sure that the product is powered off, and disconnect the power cord from the AC outlet.**
2. **Open the front cover (1).**

- Open the front cover fully to its limit.

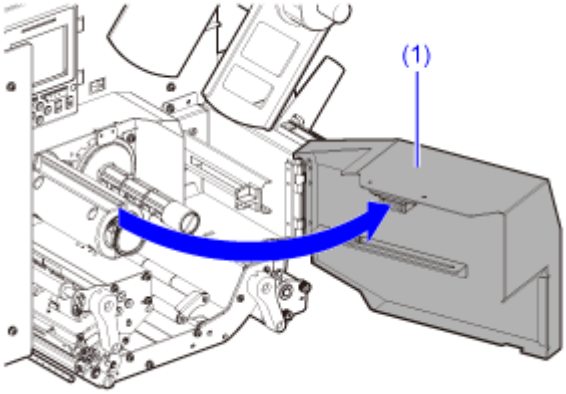

3. **Open the nip lock lever (2) to unlock it.**

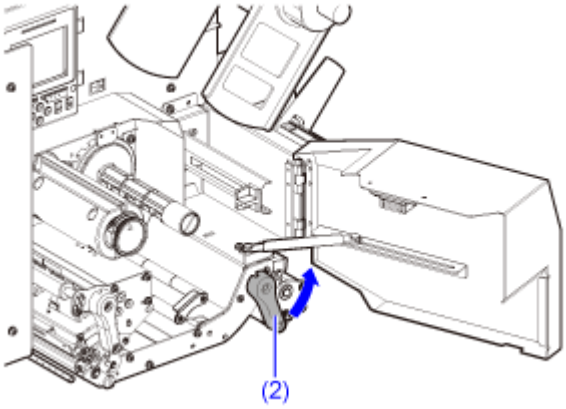

4. **Remove the media and ribbon if they are already loaded.**

5. **Remove the mounting screw (4) for the pressure nip roller (3), and then slide the pressure nip roller (3) towards you to remove it.**

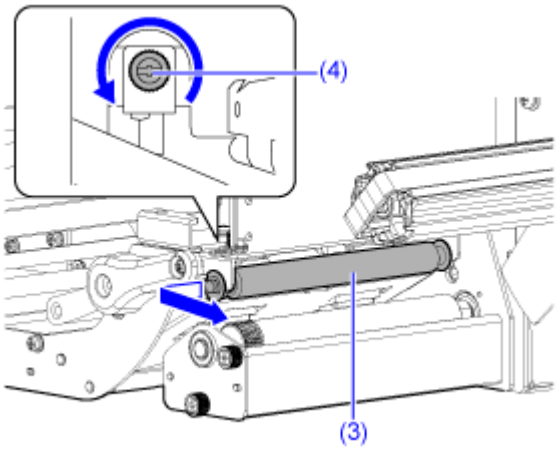

6. **Install the new pressure nip roller (3).**

a. Insert the groove on the pressure nip roller (3) into the notch on the front mounting bracket, and then press the pressure nip roller in the direction A.

- Be sure to install the pressure nip roller (3) onto the product in the orientation shown below.

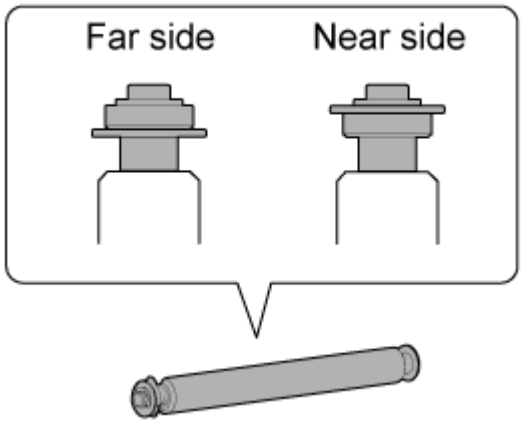

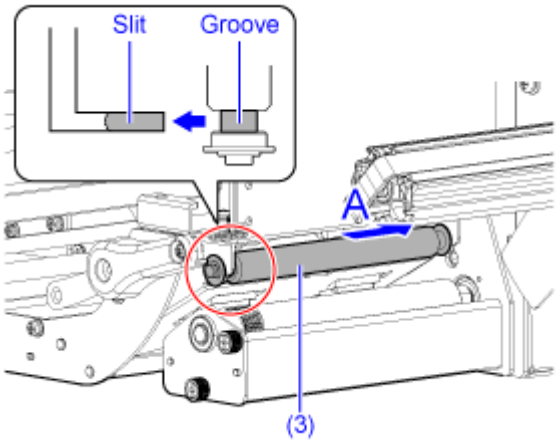

b. Fasten with the mounting screw (4).

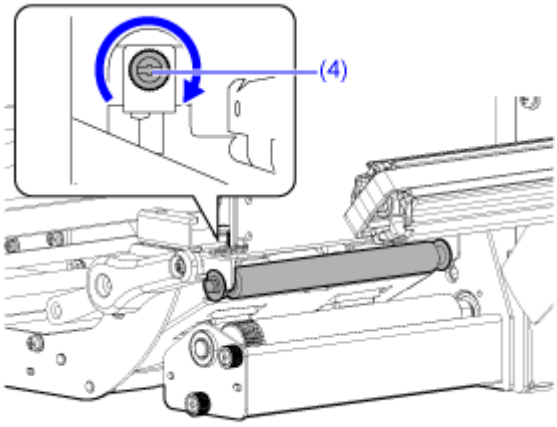

7. Load the media and ribbon back if you remove them in step 4.

8. Close the nip lock lever (2).

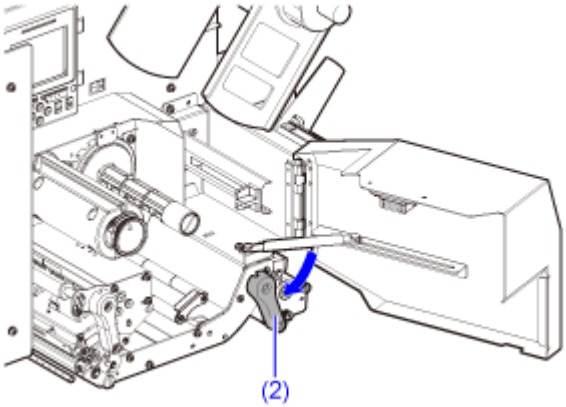

9. Close the front cover (1).

- When closing the front cover, be careful not to pinch your fingers.

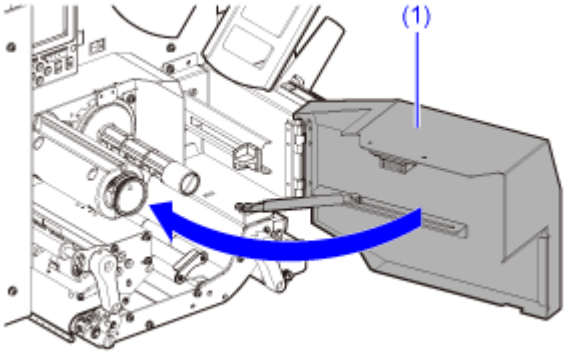

Operating the Notification Screen of SOS (SATO Online Services) (SOS users only)

Operating the Notification Screen of the SOS (SATO Online Services) On-Demand Mode (SOS users only)

In the SOS (SATO Online Services) function, the product information is sent to the SOS cloud and monitored and managed.

The status icon and the notification screen appear at the time specified when [SOS Mode] is set to [On-Demand] in the [Interface] > [Network] > [Services] > [Online Services] menu and [Periodic Notification] is enabled on the product. A QR code with the product information is displayed on the notification screen. You can send the product information to the SOS cloud by scanning the QR code with a tablet or a smartphone.

The following shows how to operate the notification screen.

By pressing the button, the display returns to the Offline screen without resetting the QR code for periodic notification.

The status icon remains .

By pressing the button, the QR code for periodic notification is reset and the display returns to the Offline screen.

The status icon changes to .

- QR codes can also be displayed from [SOS Update].

Operating the Date and Time Settings Notification Screen of SOS (SATO Online Services) (SOS users only)

To use the SOS (SATO Online Services) function, date and time settings of the product must be set correctly. A notification screen appears when there is a problem with the date and time settings and the product cannot connect to SOS. Follow the steps on the screen and set the date and time correctly.

1. Press the button on the notification screen.

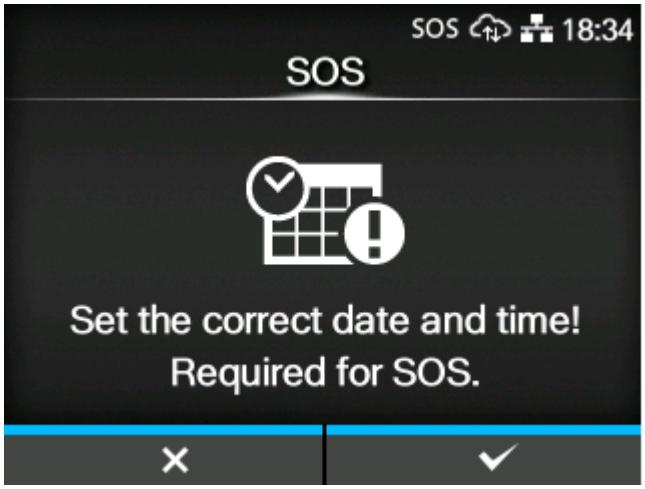

Clear the NTP server connection problem when the NTP function is enabled. The notification screen appears every 15 seconds until the NTP server connection problem is cleared.

The date and time setting screen appears when the NTP function is disabled or the optional battery for the calendar is installed. Proceed to step 2.

2. Set the correct date and press the button.

Select the digit for input using the / buttons and select the number to input using the / buttons.

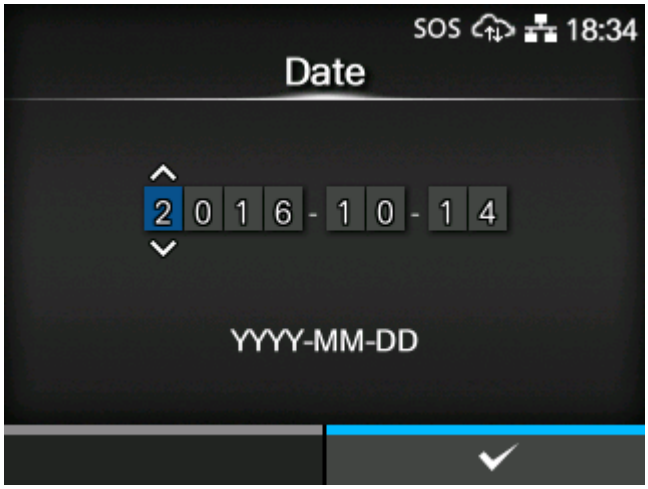

3. Set the correct time and press the button.

Select the digit for input using the / buttons and select the number to input using the / buttons.

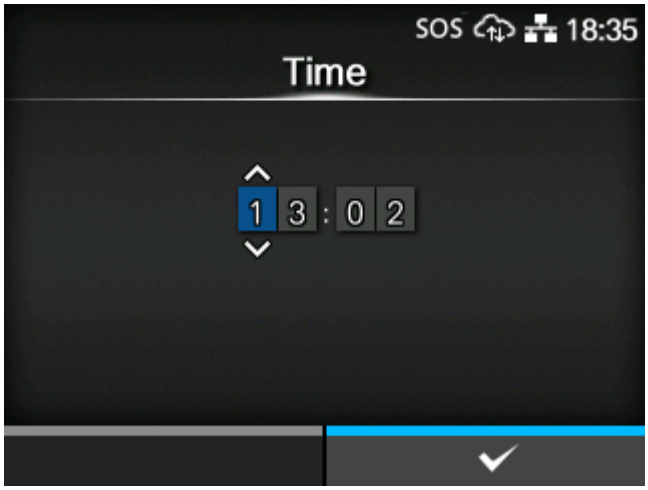

- SOS will not operate if you cancel the date and time settings by pressing the button on the notification screen. To display the notification screen again, reboot the product or change the setting of [On-Demand]/[Real-Time] in [SOS Mode] a few times to reboot the SOS function.

SOS (SATO Online Services) Application (SOS users only)

How to Install the SOS Mobile Application

When the SOS (SATO Online Services) mode is enabled on the product, a QR code is displayed on the screen at the time of the error outbreak or the timing that is set to perform periodic notification. By scanning the QR code with a tablet or a smartphone, you can check how to clear the error according to the current product information in the QR code. You can also contact your SATO technical support center directly from this specialized application by phone or e-mail.

For instructions on installing the SOS mobile application, refer to the SOS Portal Site.

http://www.sato-sos.com/en/support/

How to Use the SOS Mobile Application

For instructions on using the SOS mobile application, refer to the SOS user manual.

http://www.sato-sos.com/en/support/sos_usermanual.pdf

When You Are in Trouble

When an Error Message Appears

Error Message 1001 (Machine Error)

When there is an error with the product, the error message appears on the screen.

Check the cause and countermeasure, and then take appropriate action.

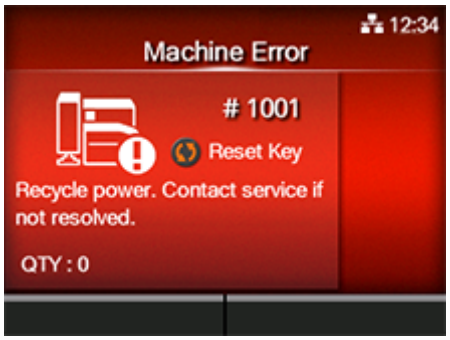

To clear the error:

Power off the product.

Cause and Countermeasure
Cause A defect has occurred in the product. **Countermeasure** Turn the product's power off and on several times. Powering On/Off the Product

Contact your SATO technical support center if the error cannot be resolved.

Contact Information for When You Are in Trouble

Error Message 1003 (Parity Error)

When there is an error with the product, the error message appears on the screen.

Check the cause and countermeasure, and then take appropriate action.

To clear the error:

Press the button (OFFLINE) or button, or adjust the settings.

Next, press the button.

Cause and Countermeasure
Cause (1) RS-232C settings are incorrect. **Countermeasure (1)** Set the interface settings of the product again. RS-232C
Cause (2) The RS-232C cable is not connected correctly. **Countermeasure (2)** Power off the product, connect the RS-232C cable correctly, and then power on the product again. Powering On/Off the Product RS-232C Interface Connections

Contact your SATO technical support center if the error cannot be resolved.

Contact Information for When You Are in Trouble

Error Message 1004 (Overrun Error)

When there is an error with the product, the error message appears on the screen.

Check the cause and countermeasure, and then take appropriate action.

To clear the error:

Press the button (OFFLINE) or button, or adjust the settings.

Next, press the button.

Cause and Countermeasure
Cause (1) RS-232C settings are incorrect. **Countermeasure (1)** Set the interface settings of the product again. RS-232C
Cause (2) The RS-232C cable is not connected correctly. **Countermeasure (2)** Power off the product, connect the RS-232C cable correctly, and then power on the product again. Powering On/Off the Product RS-232C Interface Connections

Contact your SATO technical support center if the error cannot be resolved.

Contact Information for When You Are in Trouble

Error Message 1005 (Framing Error)

When there is an error with the product, the error message appears on the screen.

Check the cause and countermeasure, and then take appropriate action.

To clear the error:

Press the button (OFFLINE) or button, or adjust the settings.

Next, press the button.

Cause and Countermeasure
Cause (1) RS-232C settings are incorrect. **Countermeasure (1)** Set the interface settings of the product again. RS-232C
Cause (2) The RS-232C cable is not connected correctly. **Countermeasure (2)** Power off the product, connect the RS-232C cable correctly, and then power on the product again. Powering On/Off the Product RS-232C Interface Connections

Contact your SATO technical support center if the error cannot be resolved.

Contact Information for When You Are in Trouble

Error Message 1006 (Buffer Overflow)

When there is an error with the product, the error message appears on the screen.

Check the cause and countermeasure, and then take appropriate action.

To clear the error:

Press the button (OFFLINE) or button, or adjust the settings.

Next, press the button.

Cause and Countermeasure
Cause (1) The size of the received data from the host exceeds the size of the receive buffer. **Countermeasure (1)** Change the settings on the host so that data that exceeds the size of the receive buffer cannot be sent.
Cause (2) The interface settings between the product and the host are incorrect. **Countermeasure (2)** Set the interface settings of the product and host again. Interface Menu

Contact your SATO technical support center if the error cannot be resolved.

Contact Information for When You Are in Trouble

Error Message 1007 (Head Open)

When there is an error with the product, the error message appears on the screen.

Check the cause and countermeasure, and then take appropriate action.

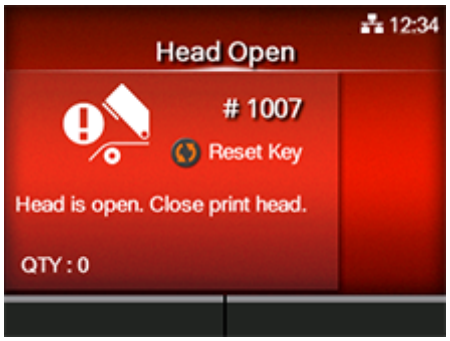

To clear the error:

Lock the print head.

Next, press the button.

Cause and Countermeasure
Cause ◦ The print head is unlocked. ◦ The sensor for detecting the open/close status of the print head is defective. **Countermeasure** Unlock the print head once, and then lock it again. 1. Open the head lock lever (1) to unlock it. 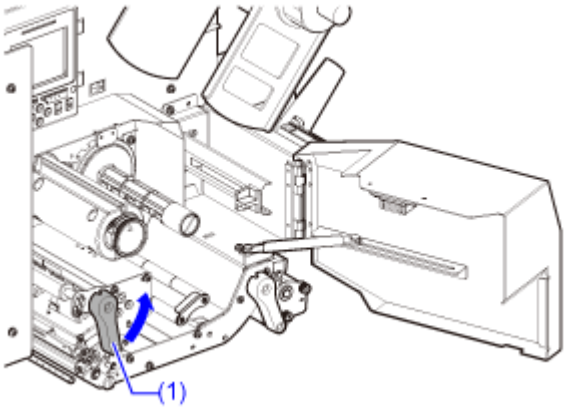

Cause and Countermeasure
2. Close the head lock lever (1) to lock the print head. 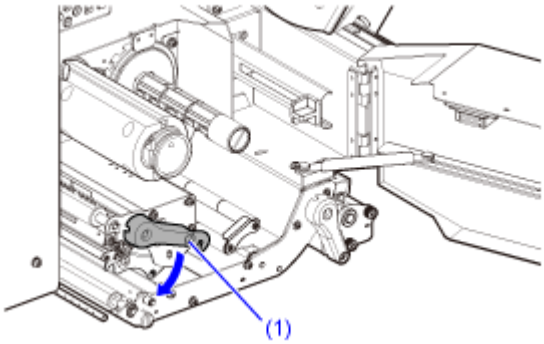

Contact your SATO technical support center if the error cannot be resolved.

Contact Information for When You Are in Trouble

Error Message 1008 (Out of Paper)

When there is an error with the product, the error message appears on the screen.

Check the cause and countermeasure, and then take appropriate action.

To clear the error:

Load the media and open/close the print head, or press the button (OFFLINE) or the button.

Next, press the button.

Cause and Countermeasure
Cause (1) The media is not loaded. **Countermeasure (1)** Load the media. Loading Media
Cause (2) The media is not loaded correctly. **Countermeasure (2)** Load the media correctly. Loading Media
Cause (3) The media has jammed. **Countermeasure (3)** Remove the jammed media. Refer to the video for loading the media, for the media path, and for the operation of each part inside the product.

Cause and Countermeasure
Loading Media

Contact your SATO technical support center if the error cannot be resolved.

Contact Information for When You Are in Trouble

Error Message 1009 (Ribbon End)

When there is an error with the product, the error message appears on the screen.

Check the cause and countermeasure, and then take appropriate action.

To clear the error:

Load the ribbon correctly and close the print head, or press the button (OFFLINE) or button.

Next, press the button.

Cause and Countermeasure
Cause (1) The ribbon is not loaded. **Countermeasure (1)** Load the ribbon. Loading Ribbon
Cause (2) The ribbon is not loaded correctly. **Countermeasure (2)** Load the ribbon and the media correctly. Loading Ribbon Loading Media
Cause (3) There is no ribbon. **Countermeasure (3)** Load a new ribbon. Loading Ribbon

Cause and Countermeasure
Cause (4) The ribbon rollers are dirty. **Countermeasure (4)** Clean the ribbon rollers. Cleaning the Suction Plate, Media and Ribbon Rollers

Contact your SATO technical support center if the error cannot be resolved.

Contact Information for When You Are in Trouble

Error Message 1010 (Media Error)

When there is an error with the product, the error message appears on the screen.

Check the cause and countermeasure, and then take appropriate action.

To clear the error:

Open/close the print head, or press the button (OFFLINE) or the button.

Next, press the button.

Cause and Countermeasure
Cause (1) The media size of the print data and the actual media size are different. **Countermeasure (1)** Check the media size of the print data and the actual media size again. If the error is not solved, turn the product's power off and then on again.
Cause (2) The media size of the print data is longer than the actual media size. **Countermeasure (2)** Check the print data. If the error is not solved, turn the product's power off and then on again.
Cause (3) The media is fed a longer distance due to the incorrect sensor level. **Countermeasure (3)** Adjust the media sensor level. Calibrate If the error is not solved, turn the product's power off and then on again.

Contact your SATO technical support center if the error cannot be resolved.

Contact Information for When You Are in Trouble

Error Message 1012 (Head Error)

When there is an error with the product, the error message appears on the screen.

Check the cause and countermeasure, and then take appropriate action.

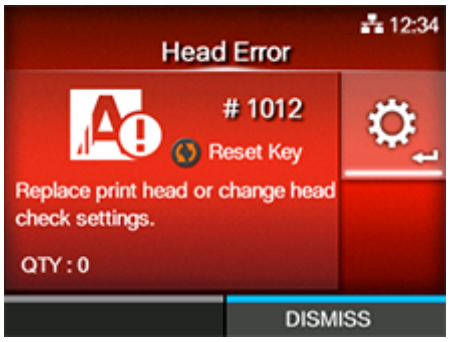

To clear the error:

Power off the product, or change print head check conditions.

To forcibly clear a print head error and resume printing, press and hold the button (DISMISS) for five seconds.

Cause and Countermeasure
Cause (1) The print elements are worn out. **Countermeasure (1)** Power off the product, or change the print head check conditions to only check for missing elements in barcodes and try to adjust missing elements to white bars. Powering On/Off the Product Head Check
Cause (2) The print head is defective. **Countermeasure (2)** Replace the print head. Replacing the Print Head

Contact your SATO technical support center if the error cannot be resolved.

Contact Information for When You Are in Trouble

- Regarding labels output after a head error, use your own barcode scanner to read and check the printed barcodes.

Error Message 1013 (USB R/W Error)

When there is an error with the product, the error message appears on the screen.

Check the cause and countermeasure, and then take appropriate action.

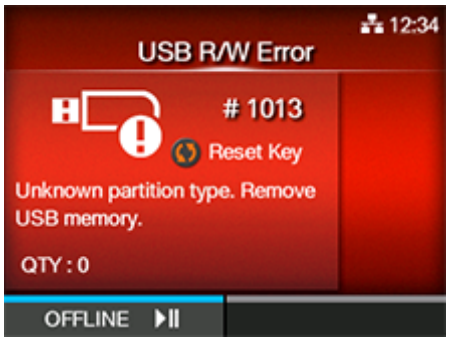

To clear the error:

Connect the USB memory and then disconnect it, or press the button (OFFLINE) or the button.

Next, press the button.

Cause and Countermeasure
Cause (1) The USB memory is disconnected while writing. **Countermeasure (1)** Connect the USB memory.
Cause (2) The copy area in the USB memory is not sufficient. **Countermeasure (2)** Make sure that the USB memory has sufficient copy area.
Cause (3) Writing to the USB memory fails. **Countermeasure (3)** Replace the USB memory.
Cause (4) The USB memory is not formatted. **Countermeasure (4)** Format the USB memory to a FAT32 format.

Contact your SATO technical support center if the error cannot be resolved.

Contact Information for When You Are in Trouble

Error Message 1014 (USB Memory Full)

When there is an error with the product, the error message appears on the screen.

Check the cause and countermeasure, and then take appropriate action.

To clear the error:

Connect the USB memory with sufficient space, or press the button (OFFLINE) or button.

Next, press the button.

Cause and Countermeasure
Cause The space in the USB memory is not sufficient. **Countermeasure** Delete unwanted data from the USB memory.

Contact your SATO technical support center if the error cannot be resolved.

Contact Information for When You Are in Trouble

Error Message 1017 (SBPL Command Error)

When there is an error with the product, the error message appears on the screen.

Check the cause and countermeasure, and then take appropriate action.

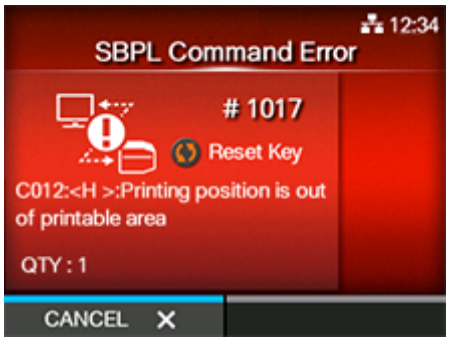

To clear the error:

Press the button (CANCEL).

Next, press the button.

Cause and Countermeasure
Cause Incorrect command or parameter in the print data. For details of the error, check the "Caaa: <bb>: cc" part at the bottom of the screen. ◦ Caaa: position of error occurrence ◦ <bb>: error command name ◦ cc: error content How to See the Command Error Information **Countermeasure** Check the print data. If the error is not solved, turn the product's power off and then on again. • The command error appears when [Show Error] in [SBPL] under the [Applications] menu is set to [Enabled]. Show Error

Contact your SATO technical support center if the error cannot be resolved.

Contact Information for When You Are in Trouble

How to See the Command Error Information

- **Location of error occurrence**

  "Caaa" in the command error message shows the location of command error.
  The number of ESC commands from ESC+A is shown in "aaa".
  Note that the ESC+A command is not included in the number of ESC commands, which can be shown up to 999.
  When a command error is detected by the Horizontal Print Position <H> command.

  ------: [ESC]A
  C001: [ESC]V100
  C002: [ESC]H99999
  C003: [ESC]L0202
  C004: [ESC]M,ABCDEF
  C005: [ESC]Q1
  C006: [ESC]Z

  In this case, C002 is the location of the error.

- **Error command name**

  The command name is shown in "<bb>". Error is detected in the command name.

  - A one-byte command name is left aligned

- **Error description**

  The cause of command error appears in "cc" in the error message ("Caaa:<bb>:cc").

Description ("cc")	Cause
Invalid command	Analyzed improper command.
Invalid parameter	Received improper parameter.
Command table read error	Failed to read the command table.
Invalid graphic data/ custom designed data	Analyzed improper graphic and custom designed data.
Invalid registration area	• Specified memory area (card slot) is inappropriate. • Tried to write to a write-protected media.
This number is already registered	Number specified by registration command has already been taken.
Over registration area limit	Exceeded the registration area. (Memory full)
Data is not registered	Data is not registered.

Description ("cc")	Cause
Printing position is out of printable area	The specified print start position is outside the printable area.
Barcode image is out of printable area	The printing image is outside the printable area. (Barcode only)
PDF417 is specified incorrectly	There is a mistake in the PDF417 specification.
Error in generating QR code	There was a fault when generating the QR code.

Error Message 1020 (Calendar Error)

When there is an error with the product, the error message appears on the screen.

Check the cause and countermeasure, and then take appropriate action.

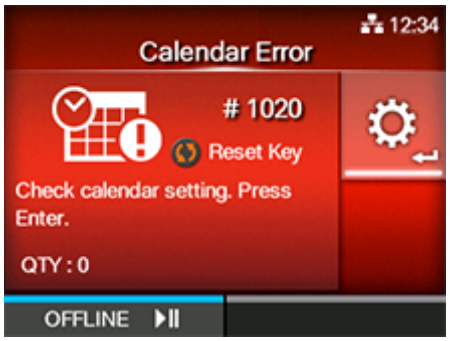

To clear the error:

Change the calendar (option) settings, press the button (OFFLINE) or button, and then press the button, or power off the product.

Cause and Countermeasure
Cause The date and time of the calendar (option) are incorrect. **Countermeasure** Turn the product's power off and on several times. Powering On/Off the Product If that does not resolve the problem, check whether the battery for the optional calendar is attached properly, or if the battery for the calendar needs to be replaced. Contact your SATO technical support center. Contact Information for When You Are in Trouble

Error Message 1021 (BCC Check Error)

When there is an error with the product, the error message appears on the screen.

Check the cause and countermeasure, and then take appropriate action.

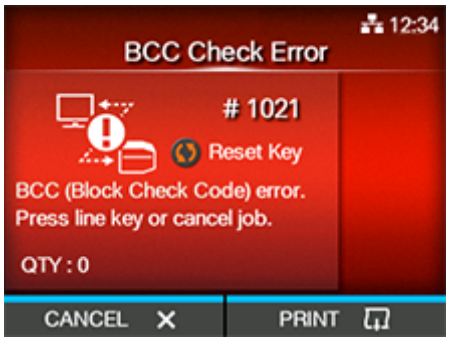

To clear the error:

Press the button (PRINT) or the button (CANCEL) or the button.

Next, press the button.

Cause and Countermeasure
Cause The BCC code of the data to be sent (one item) is incorrect. **Countermeasure** Check the data to be sent and interface settings. ◦ button: Continue printing from the print data where the BCC error occurred. ◦ Cancel button: Cancel the print data where the BCC error occurred, and continue printing from the next item. ◦ Send the SUB command: Clear the BCC error and continue printing from where it stopped. ◦ Send the CAN command: Cancel the print data where the BCC error occurred and continue printing from the next item.

Contact your SATO technical support center if the error cannot be resolved.

Contact Information for When You Are in Trouble

Error Message 1022 (Print Head Overheated)

When there is an error with the product, the error message appears on the screen.

Check the cause and countermeasure, and then take appropriate action.

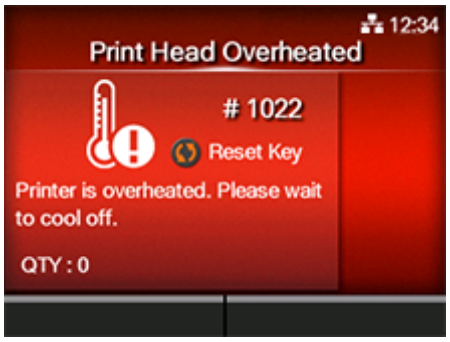

To clear the error:

Stop the operation of the product and wait for the temperature to fall.

When the temperature has fallen, press the button.

Cause and Countermeasure
Cause The temperature of the product has exceeded its allowed value. **Countermeasure** Stop the operation of the product and wait for the temperature to fall.

Contact your SATO technical support center if the error cannot be resolved.

Contact Information for When You Are in Trouble

Error Message 1023 (NTP Error)

When there is an error with the product, the error message appears on the screen.

Check the cause and countermeasure, and then take appropriate action.

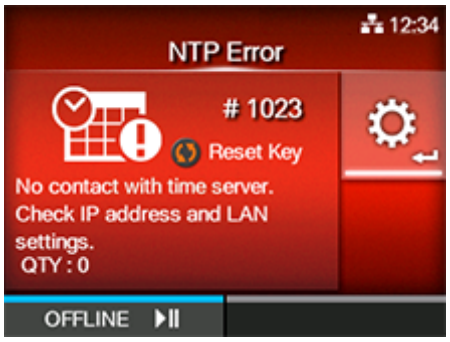

To clear the error:

Press the button (OFFLINE) or change the calendar setting.

Next, press the button.

Cause and Countermeasure
Cause Could not connect to the time server and set the date and time. **Countermeasure** ◦ Confirm that the address of the time server is correct. Time Server IP ◦ Confirm that there is a connection to the time server. ◦ If the battery for the calendar is attached, the calendar can be set manually and operation resumed without NTP functionality. Regional

Contact your SATO technical support center if the error cannot be resolved.

Contact Information for When You Are in Trouble

Error Message 1024 (Head Density Changed)

When there is an error with the product, the error message appears on the screen.

Check the cause and countermeasure, and then take appropriate action.

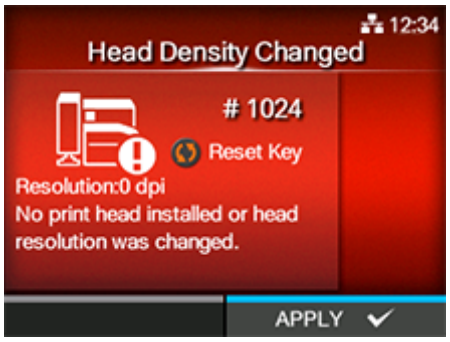

To clear the error:

Check the message that appeared on the screen.

Cause and Countermeasure
Cause (1) The print head is not installed. **Countermeasure (1)** Install the print head. Replacing the Print Head
Cause (2) A new print head with a different resolution has been installed. **Countermeasure (2)** Install a print head with the same resolution as the old print head. Replacing the Print Head

Contact your SATO technical support center if the error cannot be resolved.

Contact Information for When You Are in Trouble

Error Message 1028 (Gap Not Found)

When there is an error with the product, the error message appears on the screen.

Check the cause and countermeasure, and then take appropriate action.

To clear the error:

Press the button (OFFLINE) or open/close the print head.

Next, press the button.

Cause and Countermeasure
Cause (1) Meandering media. **Countermeasure (1)** Load the media correctly. Loading Media
Cause (2) The media route is dirty. **Countermeasure (2)** Clean the media route. Cleaning the Suction Plate, Media and Ribbon Rollers
Cause (3) The media sensor type is incorrect. **Countermeasure (3)** Set the media sensor type which is compatible with the media you use. Media Sensor Type
Cause (4) The media sensor level is incorrect.

Cause and Countermeasure
Countermeasure (4) Adjust the media sensor level. Calibrate

Contact your SATO technical support center if the error cannot be resolved.

Contact Information for When You Are in Trouble

Error Message 1035 (I-mark Not Found)

When there is an error with the product, the error message appears on the screen.

Check the cause and countermeasure, and then take appropriate action.

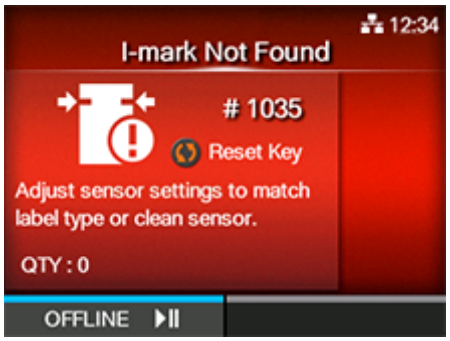

To clear the error:

Press the button (OFFLINE) or open/close the print head.

Next, press the button.

Cause and Countermeasure
Cause (1) Meandering media. **Countermeasure (1)** Load the media correctly. Loading Media
Cause (2) The media route is dirty. **Countermeasure (2)** Clean the media route. Cleaning the Suction Plate, Media and Ribbon Rollers
Cause (3) The media sensor type is incorrect. **Countermeasure (3)** Set the media sensor type which is compatible with the media you use. Media Sensor Type
Cause (4) The media sensor level is incorrect.

Cause and Countermeasure
Countermeasure (4) Adjust the media sensor level. Calibrate

Contact your SATO technical support center if the error cannot be resolved.

Contact Information for When You Are in Trouble

Error Message 1081 (Suction Error (Printing))

When there is an error with the product, the error message appears on the screen.

Check the cause and countermeasure, and then take appropriate action.

To clear the error:

Press the button.

Cause and Countermeasure
Cause (1) The media is not loaded correctly. **Countermeasure (1)** Load the media correctly. Loading Media
Cause (2) The air pressure is not appropriate. **Countermeasure (2)** ◦ Set an appropriate air pressure (0.45 to 0.5 Mpa). ◦ Check whether the hand valve is open.
Cause (3) The suction plate or the suction sensor is dirty. **Countermeasure (3)** Clean the suction plate and the suction sensor. Cleaning the Suction Plate, Media and Ribbon Rollers
Cause (4) The media stop position is incorrect.

Cause and Countermeasure
Countermeasure (4) Adjust the media stop position. Print End Position

Contact your SATO technical support center if the error cannot be resolved.

Contact Information for When You Are in Trouble

Error Message 1082 (Suction Error (Applying))

When there is an error with the product, the error message appears on the screen.

Check the cause and countermeasure, and then take appropriate action.

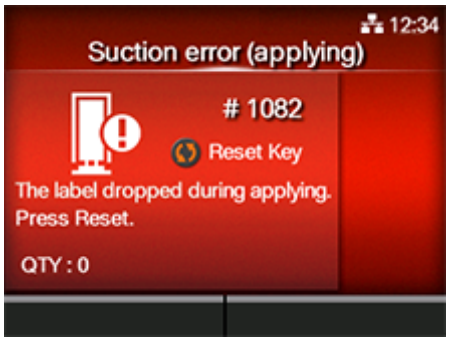

To clear the error:

Press the button.

Cause and Countermeasure
Cause (1) The media is not loaded correctly. **Countermeasure (1)** Load the media correctly. Loading Media
Cause (2) The air pressure is not appropriate. **Countermeasure (2)** ◦ Set an appropriate air pressure (0.45 to 0.5 Mpa). ◦ Check whether the hand valve is open.
Cause (3) The suction plate or the suction sensor is dirty. **Countermeasure (3)** Clean the suction plate and the suction sensor. Cleaning the Suction Plate, Media and Ribbon Rollers
Cause (4) The media stop position is incorrect.

Cause and Countermeasure
Countermeasure (4) Adjust the media stop position. Print End Position

Contact your SATO technical support center if the error cannot be resolved.

Contact Information for When You Are in Trouble

Error Message 1083 (Apply Error (Label Is Remaining))

When there is an error with the product, the error message appears on the screen.

Check the cause and countermeasure, and then take appropriate action.

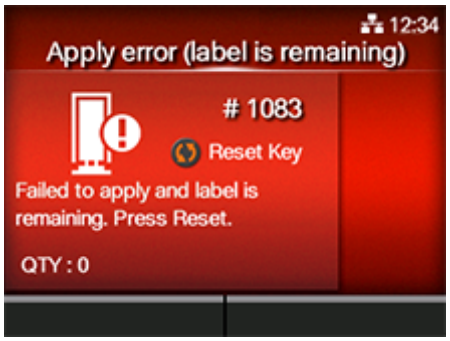

To clear the error:

Press the button.

Cause and Countermeasure
Cause (1) The media is not loaded correctly. **Countermeasure (1)** Load the media correctly. Loading Media
Cause (2) The label is not applied and remains on the suction plate. **Countermeasure (2)** Clean the suction plate and the suction sensor. Cleaning the Suction Plate, Media and Ribbon Rollers
Cause (3) After feeding, the label remains on the suction plate. **Countermeasure (3)** Remove the label from the suction plate.
Cause (4) The suction plate or the suction sensor is dirty. **Countermeasure (4)** Clean the suction plate and the suction sensor.

Cause and Countermeasure
Cleaning the Suction Plate, Media and Ribbon Rollers
Cause (5) The air pressure is not appropriate. **Countermeasure (5)** ◦ Set an appropriate air pressure (0.45 to 0.5 Mpa). ◦ Check whether the hand valve is open.

Contact your SATO technical support center if the error cannot be resolved.

Contact Information for When You Are in Trouble

Error Message 1084 (Apply Error (Missed))

When there is an error with the product, the error message appears on the screen.

Check the cause and countermeasure, and then take appropriate action.

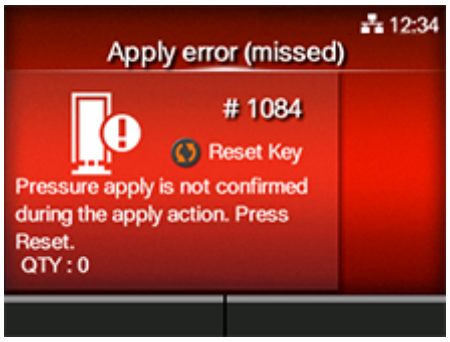

To clear the error:

Press the button.

Cause and Countermeasure
Cause (1) The suction plate did not make contact with the package. **Countermeasure (1)** Check the distance between the suction plate and the package.
Cause (2) The suction plate did make contact with the package, but the pressure sensor did not turn on. **Countermeasure (2)** Check how the suction plate makes contact with the package.

Contact your SATO technical support center if the error cannot be resolved.

Contact Information for When You Are in Trouble

Error Message 1085 (Capacity Over (No Data))

When there is an error with the product, the error message appears on the screen.

Check the cause and countermeasure, and then take appropriate action.

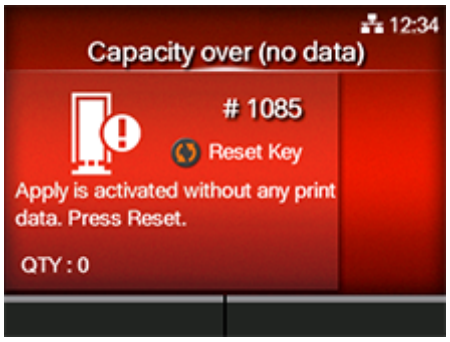

To clear the error:

Press the button.

Cause and Countermeasure
Cause An [Activate Apply] signal was input when there was no data that could be printed. **Countermeasure** Input the [Activate Apply] signal after print data is received.

Contact your SATO technical support center if the error cannot be resolved.

Contact Information for When You Are in Trouble

Error Message 1086 (Capacity Over (Offline))

When there is an error with the product, the error message appears on the screen.

Check the cause and countermeasure, and then take appropriate action.

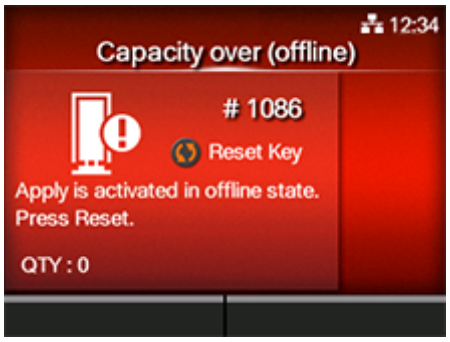

To clear the error:

Press the button.

Cause and Countermeasure
Cause An [Activate Apply] signal was input when the system was offline. **Countermeasure** Input the [Activate Apply] signal when the system is online.

Contact your SATO technical support center if the error cannot be resolved.

Contact Information for When You Are in Trouble

Error Message 1087 (Capacity Over (Origin Warning))

When there is an error with the product, the error message appears on the screen.

Check the cause and countermeasure, and then take appropriate action.

To clear the error:

Press the button.

Cause and Countermeasure
Cause An [Activate Apply] signal was input when the product could not do an application operation (during an origin off, press on, or suction on warning). **Countermeasure** Clear the origin off, press on, or suction on error, and then input the [Activate Apply] signal.

Contact your SATO technical support center if the error cannot be resolved.

Contact Information for When You Are in Trouble

Error Message 1088 (Capacity Over (Applying))

When there is an error with the product, the error message appears on the screen.

Check the cause and countermeasure, and then take appropriate action.

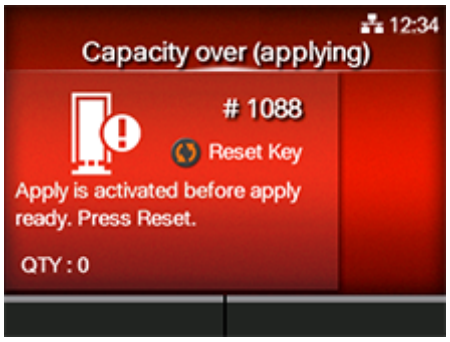

To clear the error:

Press the button.

Cause and Countermeasure
Cause An [Activate Apply] signal was input while printing and the cylinder was moving forward (CJ). **Countermeasure** Input the [Activate Apply] signal after printing and the cylinder has moved forward (CJ).

Contact your SATO technical support center if the error cannot be resolved.

Contact Information for When You Are in Trouble

Error Message 1089 (Cylinder Error (Forward))

When there is an error with the product, the error message appears on the screen.

Check the cause and countermeasure, and then take appropriate action.

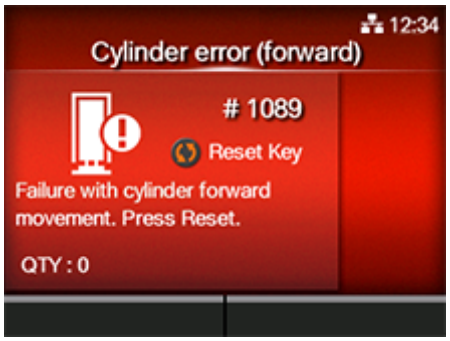

To clear the error:

Press the button.

Cause and Countermeasure
Cause There is an abnormality while the cylinder is moving forward. **Countermeasure** ◦ Set an appropriate air pressure (0.45 to 0.5 Mpa). ◦ Check whether the hand valve is open.

Contact your SATO technical support center if the error cannot be resolved.

Contact Information for When You Are in Trouble

Error Message 1090 (Cylinder Error (Backward))

When there is an error with the product, the error message appears on the screen.

Check the cause and countermeasure, and then take appropriate action.

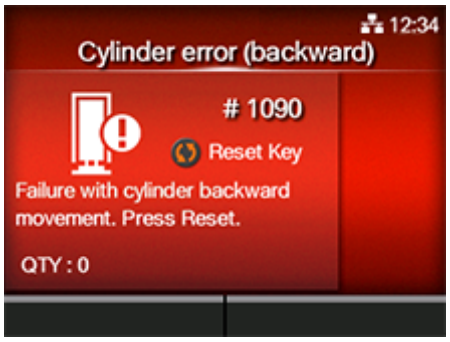

To clear the error:

Press the button.

Cause and Countermeasure
Cause There is an abnormality while the cylinder is moving backward. **Countermeasure** ◦ Set an appropriate air pressure (0.45 to 0.5 Mpa). ◦ Check whether the hand valve is open.

Contact your SATO technical support center if the error cannot be resolved.

Contact Information for When You Are in Trouble

Error Message 1091 (Emergency Stop Error)

When there is an error with the product, the error message appears on the screen.

Check the cause and countermeasure, and then take appropriate action.

To clear the error:

Turn off the emergency stop signal, and then press the button.

Cause and Countermeasure
Cause An emergency stop B contact signal was input. **Countermeasure** Turn off the emergency stop B contact signal.

Contact your SATO technical support center if the error cannot be resolved.

Contact Information for When You Are in Trouble

Error Message 1092 (The Nip Roller Lever Is Open)

When there is an error with the product, the error message appears on the screen.

Check the cause and countermeasure, and then take appropriate action.

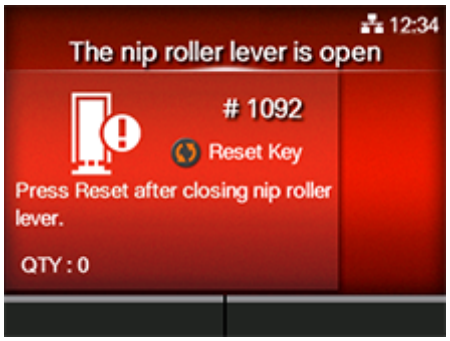

To clear the error:

Close the nip lock lever, and then press the button.

Cause and Countermeasure
Cause The nip roller is unlocked. **Countermeasure** Close the nip lock lever to lock it.

Contact your SATO technical support center if the error cannot be resolved.

Contact Information for When You Are in Trouble

Error Message 1093 (Liner Rewinder Motor Error)

When there is an error with the product, the error message appears on the screen.

Check the cause and countermeasure, and then take appropriate action.

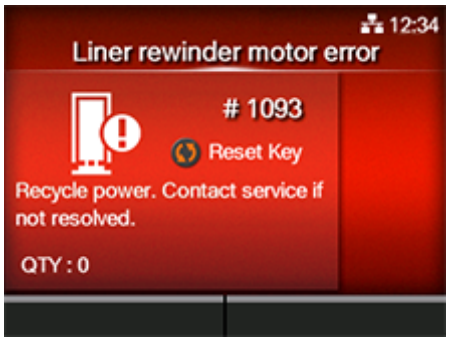

To clear the error:

Power off the product.

Cause and Countermeasure
Cause Liner winder motor is abnormal. **Countermeasure** Turn the product's power off and then on again. Powering On/Off the Product

Contact your SATO technical support center if the error cannot be resolved.

Contact Information for When You Are in Trouble

Error Message 1097 (Internal Signal Trouble 1)

When there is an error with the product, the error message appears on the screen.

Check the cause and countermeasure, and then take appropriate action.

To clear the error:

Power off the product.

Cause and Countermeasure
Cause A communication abnormality has occurred in the product. **Countermeasure** Turn the product's power off and then on again. Powering On/Off the Product

Contact your SATO technical support center if the error cannot be resolved.

Contact Information for When You Are in Trouble

Error Message 1098 (Exclusive Error 1)

When there is an error with the product, the error message appears on the screen.

Check the cause and countermeasure, and then take appropriate action.

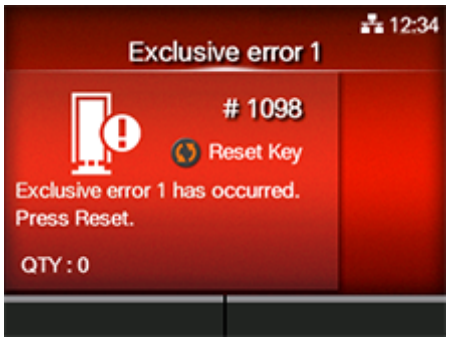

To clear the error:

Press the button.

Cause and Countermeasure
Cause There is an error in the unique specifications. The cause varies depending on the device's settings. **Countermeasure** There is an error in the unique specifications. The countermeasure varies depending on the device's settings.

Contact your SATO technical support center if the error cannot be resolved.

Contact Information for When You Are in Trouble

Error Message 1100 (Exclusive Error 2)

When there is an error with the product, the error message appears on the screen.

Check the cause and countermeasure, and then take appropriate action.

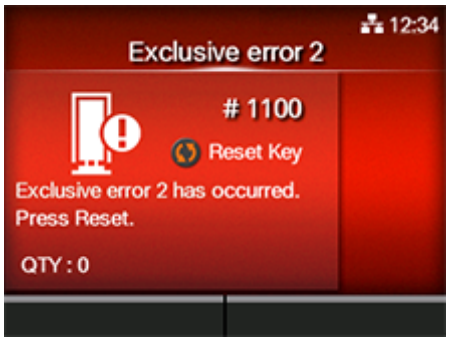

To clear the error:

Press the button.

Cause and Countermeasure
Cause There is an error in the unique specifications. The cause varies depending on the device's settings. **Countermeasure** There is an error in the unique specifications. The countermeasure varies depending on the device's settings.

Contact your SATO technical support center if the error cannot be resolved.

Contact Information for When You Are in Trouble

Error Message 1101 (Exclusive Error 3)

When there is an error with the product, the error message appears on the screen.

Check the cause and countermeasure, and then take appropriate action.

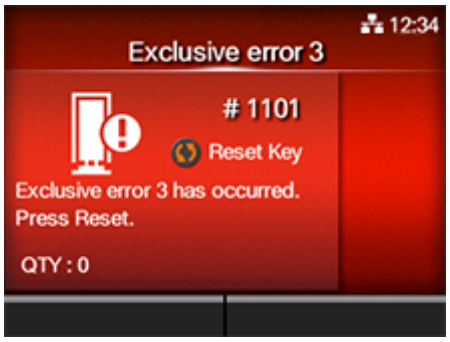

To clear the error:

Press the button.

Cause and Countermeasure
Cause There is an error in the unique specifications. The cause varies depending on the device's settings. **Countermeasure** There is an error in the unique specifications. The countermeasure varies depending on the device's settings.

Contact your SATO technical support center if the error cannot be resolved.

Contact Information for When You Are in Trouble

Error Message 1102 (External Alarm)

When there is an error with the product, the error message appears on the screen.

Check the cause and countermeasure, and then take appropriate action.

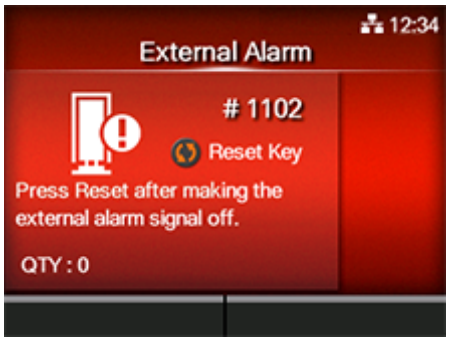

To clear the error:

Turn off the external alarm signal, and then press the button.

Cause and Countermeasure
Cause An external alarm signal was input. **Countermeasure** Turn off the external alarm signal.

Contact your SATO technical support center if the error cannot be resolved.

Contact Information for When You Are in Trouble

Error Message 1104 (Internal Signal Trouble 2)

When there is an error with the product, the error message appears on the screen.

Check the cause and countermeasure, and then take appropriate action.

To clear the error:

Power off the product.

Cause and Countermeasure
Cause A communication abnormality has occurred in the product. **Countermeasure** Turn the product's power off and then on again. Powering On/Off the Product

Contact your SATO technical support center if the error cannot be resolved.

Contact Information for When You Are in Trouble

Error Message Indication and Operating Procedure When the SOS (SATO Online Services) Is Enabled (SOS users only)

The SOS (SATO Online Services) icon appears in the error message when SOS is enabled.

If you select the SOS icon, a QR code containing the error information and the contact telephone number appears.

- **Press the button.**

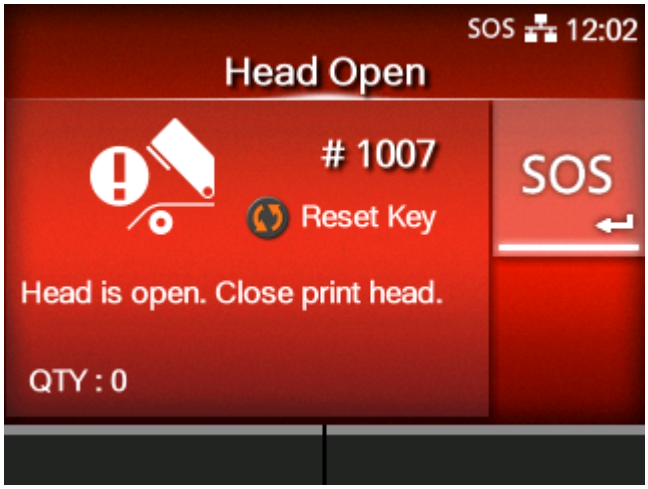

- **If the icon of the guidance videos also appears, select the SOS icon using the / button, and then press the button.**

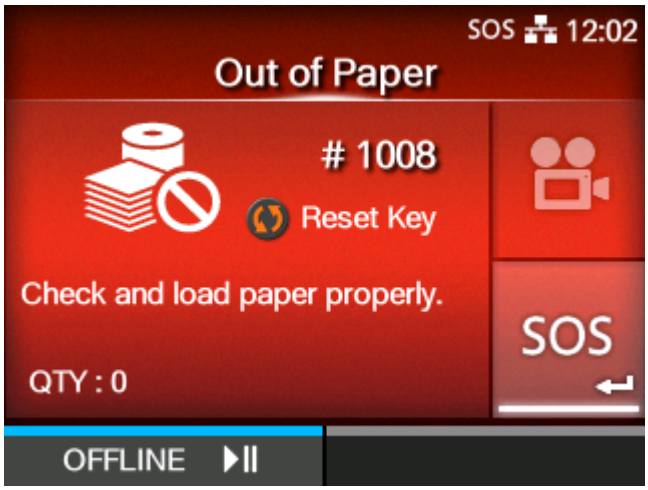

A screen with QR code, phone number, serial number, and error number appears after selecting the SOS icon and pressing the button.

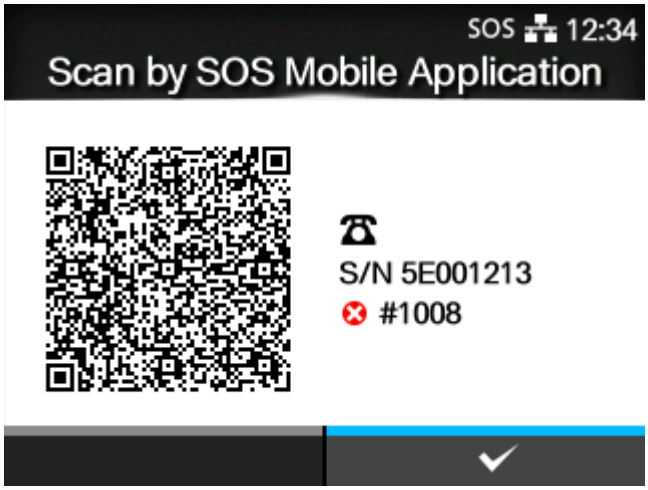

The menu for the specialized application for SOS appears after scanning the QR code with a tablet device or smartphone. A specialized SOS application is required to scan the QR code.

Press the button to return to the error message screen.

Contact Information for When You Are in Trouble

Service and Support Page of Your Nearest SATO Office

Access the following site and select your country from the list. Check the information on the displayed page.

http://www.satoworldwide.com/service-and-support.aspx

Contact Us

Access the following site to send us your questions or comments.

https://www.satoworldwide.com/contact-us.aspx

Product Specifications

Specifications

Hardware

Dimensions and Weight

Item	Description
Width	612 mm (24.09") (Excludes projection)
Height	546 mm (21.50") (Excludes projection)
Depth	325 mm (12.80") (Excludes projection)
Weight	Approximately 29.5 kg (65.04 lbs.) (Excludes mounting stand, media, and ribbon. May vary depending on applicator unit.)

- Contact your SATO sales representative for dimensions and drawings.

Power Supply

Item	Description
Input Voltage	AC 100 - 240 V ±10% (Full-range)
Frequency	50 - 60 Hz
Power Consumption	**At peak** 190VA / 190W **Standby** 30VA / 20W

Processing

Item	Description
Flash ROM	**CPU1** 2 GB **CPU2** 4 MB

Item	Description
	TAMP CPU 1 GB
SDRAM	**CPU1** 256 MB **CPU2** 64 MB **TAMP CPU** 256 KB
User Registration Area	Maximum 619 MB
Receive Buffer	**Buffer full** 2.95 MB **Buffer near full** Occurrence: 2MB, Release: 1 MB

Operation

Item	Description
LCD	TFT color 3.5-inch (88.9 mm)
LED	**STATUS** Blue/Red
Display Language	English / German / French / Spanish / Italian / Portuguese / Brazilian Portuguese / Czech / Danish / Dutch / Finnish / Greek / Hungarian / Norwegian / Polish / Romanian / Russian / Slovak / Swedish / Turkish / Chinese (Simplified) / Chinese (Traditional) / Korean / Japanese / Arabic / Thai / Vietnamese / Persian / Indonesian / Hindi / Bulgarian

Environmental Conditions (Without Media and Ribbon)

Item	Description
Operating Temperature	5 to 35 °C (41 to 95 °F)
Storage Temperature	-5 to 60 °C (23 to 140 °F)
Operating Humidity	25 to 85% RH (Non-condensing)

Item	Description
Storage Humidity	25 to 90% RH (Non-condensing)

Print

Item	Description
Print Method	Direct thermal and thermal transfer
Print Speed	**203/305 dpi** 2 to 10 inches/sec (50.8 to 254 mm/sec)
Resolution (Head Density)	**203 dpi (8 dots/mm)** **305 dpi (12 dots/mm)**
Non-printable Area	Pitch direction (Excludes liner) **Top** 1.5 mm (0.06") **Bottom** 1.5 mm (0.06") Width direction (Excludes liner) **Left** 1.5 mm (0.06") **Right** 1.5 mm (0.06")
Printable Area	**203 dpi** Length 2500 mm (98.42") x Width 104 mm (4.09") **305 dpi** Length 1500 mm (59.05") x Width 104 mm (4.09")
Print End Position	**203 dpi (1 dot = 0.125 mm (0.0049"))** 1 to 20000 dots **305 dpi (1 dot = 0.083 mm (0.0033"))** 1 to 18000 dots
Print Darkness	**Darkness level** 1 to 10

Item	Description
	Darkness range A

Apply

Item	Description
PJ Pressure Jet method	**Cylinder stroke standard** 200 mm (7.87") (effective stroke is within 170 mm (6.69")) **Conveyor speed** Stop **Application accuracy** ± 0.5mm (0.02")
CJ Cylinder Jet Method	**Cylinder stroke standard** 200 mm (7.87") (effective stroke is 182 mm (7.17")) **Blowing distance** 10 mm (0.39") or less **Conveyor speed** Maximum 21 m/min (68.90 feet/min) **Application accuracy** ± 2.0mm (0.08")

Air Specifications

Item	Description
Pressure	0.45 to 0.5 MPa (4.5 to 5.0 kgf/cm2)
Consumption	Approximately 80 liters/minute (Air consumption varies depending on application method, label size, application process capacity, and other conditions.)
Diameter of inlet for air supply	External diameter of tubes is 10φ (inserted tube format)

Sensors

Item	Description
I-mark (Reflective Type)	**Position and sensitivity** Adjustable

Item	Description
Gap (Transmissive Type)	**Position and sensitivity** Adjustable
Head Open	Fixed
Label End	Detect with I-mark sensor or Gap sensor
Label Near End	Possible to adjust remaining amount according to installation position
Ribbon End	Fixed
Ribbon Near End	Possible to adjust remaining amount on [Settings] menu
Nip Open	Fixed

- Specifications are subject to change without notice.

Interface

Supported Interfaces

The product supports the following interfaces for data communication with the host.

Standard (Built-In)

- LAN Interface (Ethernet)
- RS-232C Interface (DB 9 pins, female)
- IEEE1284 Interface (Amphenol 36 pins)
- Terminals for External Input/Output Signals (20 pin)

- Do not connect or disconnect the interface cables (or use a switch box) with power supplied to either the product or host. This may cause damage to the interface circuitry in the product or computer and is not covered by warranty.

- You can set the interface settings of the product in [Interface] on the [Settings] menu.

LAN Interface

Basic Specifications	
Connector	RJ-45 Receptacle
Protocol	• STATUS3 • STATUS4 • STATUS5 • STATUS L
IP Address	• IPv4 • IPv6
Subnet Mask / Prefix Length	• IPv4 • IPv6
Gateway Address	• IPv4 • IPv6

Cable Specifications	
Cable	10BASE-T/100BASE-TX Category 5
Cable Length	100 m (328 feet) or less

Software Specifications	
Supported Protocol	TCP/IP
Network Layer	IP, ICMP
Session Layer	TCP
Application Layer	LPD, FTP, DHCP, HTTP/HTTPS, SNMP, NTP

- Specifications are subject to change without notice.

RS-232C Interface

This interface complies with the RS-232C standard.

Basic Specifications	
Asynchronous ASCII	Half-duplex communication Bi-directional communication
Data Transmission Rate	2400, 4800, 9600, 19200, 38400, 57600, 115200 bps
Transmission Form	Start, b1, b2, b3, b4, b5, b6, b7, b8, Stop • "b8" will be omitted if using 7 bit oriented.
Data Length	7 or 8 bits (Selected)
Stop Bit	1 or 2 bits (Selected)
Parity Bit	ODD, EVEN, NONE (Selected)
Codes Used	**ASCII Character Codes** 7 bits **Graphics** 8 bits
Control Codes	STX (02H), ETX (03H), ACK (06H), NAK (15H)
Connector	DB-9 Female or equivalent
Signal Level	High = +5 to +12 V, Low = -5 to -12 V

Basic Specifications	
Protocol	READY/BUSY, XON/XOFF, STATUS3, STATUS4, STATUS5, STATUS L

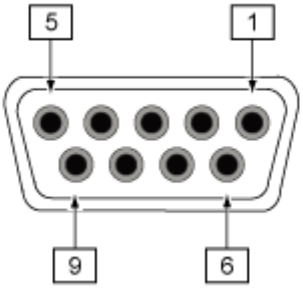

Connector Pin Specifications		
Pin No.	**I/O**	**Description**
1	-	Data Carrier Detect
2	Input	Receive Data
3	Output	Transmit Data
4	Output	Data Terminal Ready
5	Reference	Signal Ground
6	Input	Data Set Ready
7	Output	Request To Send
8	Input	Clear To Send
9	-	Not connected

Cable Specifications	
Cable Connector	DB-9 Male or equivalent
Cable Length	5 m (16.4 feet) or less

- When using the READY/BUSY control, make sure that the product is in power on mode before you send the data from the host.
- With communication protocols, such as XON/XOFF, STATUS3, STATUS4, STATUS5, or STATUS L, a receive buffer full error will occur when the received data is more than the receive buffer size (2.95 MB). Send data that is less than 2.95 MB while monitoring the status of the product.
- A parity error will be detected if this error occurs after the reception of ESC+A.
- Specifications are subject to change without notice.

IEEE1284 Interface

This interface complies with the IEEE1284 standard.

Basic Specifications	
Connector	Amphenol 36 pins, female
Signal Level	**High-level** +2.4 to +5.0 V **Low-level** +0.0 to +0.4 V
Receive Mode	Single-item buffer, Multi-item buffer

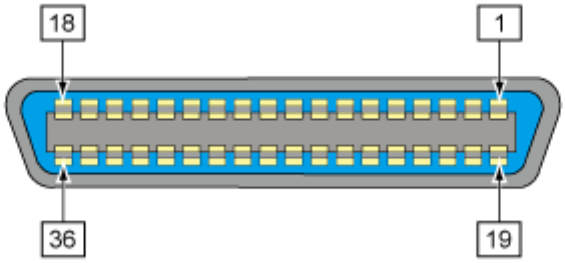

Connector Pin Specifications		
Pin No.	**I/O**	**Description**
1	Input	STROBE
2 - 9	Input	DATA 1 - DATA 8 **DATA 1** LSB **DATA 8** MSB

Connector Pin Specifications		
Pin No.	**I/O**	**Description**
10	Output	ACK
11	Output	BUSY
12	Output	PAPER EMPTY/PAPER ERROR
13	Output	SELECT
14	Input	AUTO FEED
15	-	Not in use
16	-	LOGIC Ground
17	-	Frame Ground
18	-	+5 V
19	-	STROBE RETURN
20-27	-	DATA 1 - DATA 8 RETURN
28	-	ACK RETURN
29	-	BUSY RETURN
30	-	PAPER EMPTY RETURN
31	Input	INITIALIZE
32	Output	FAULT
33-35	-	Not in use
36	Input	SELECT INPUT

Cable Specifications	
Cable Connector	Amphenol 36 pins, male
Cable Length	1.5 m (5 feet) or less

- Specifications are subject to change without notice.

Terminals for External Input/Output Signals

Basic Specifications for Terminal for External Input/Output Signals

This interface is designed to connect the product with other peripherals.

Basic Specifications	
Connector	20 pin specialized connector (terminal M3)
Signal Level	Transistor output

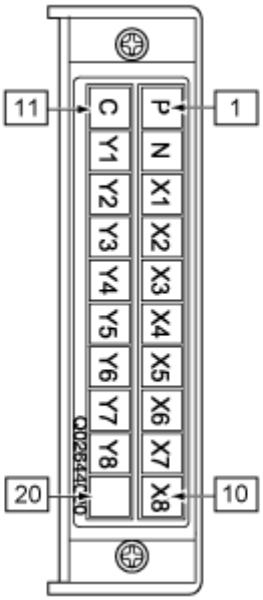

Input/Output Circuit Diagram

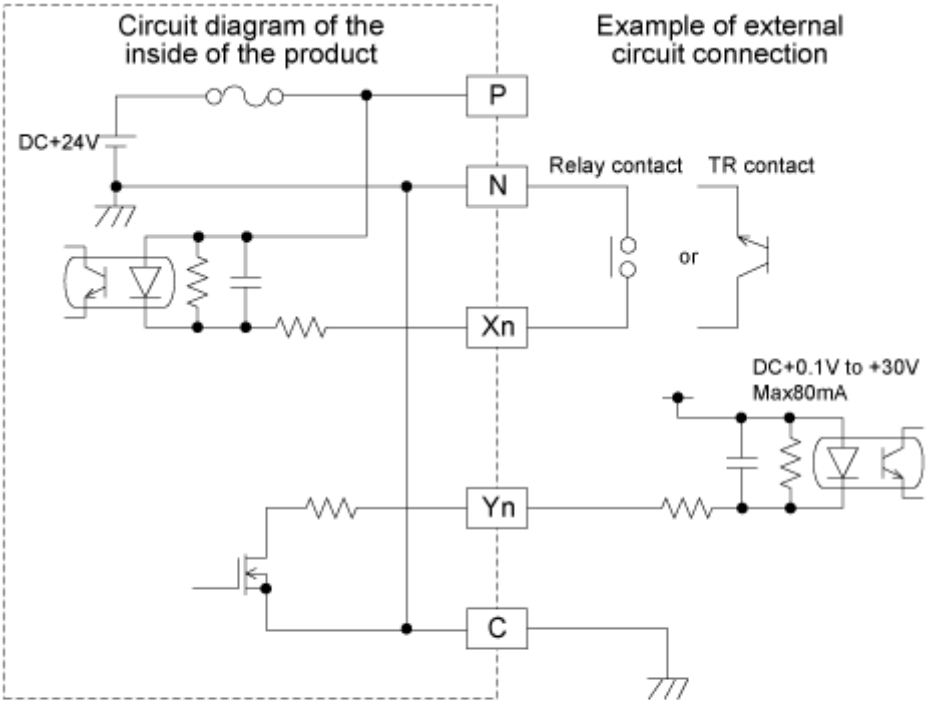

[Input circuit (Xn)]
This is a photocoupler input. Conducting the input terminal (Xn) to N through your relay contact or NPN transistor output turns on the input terminal on the terminal.

[Output circuit (Yn)]
This is an output equivalent to NPN transistor (N channel FET). Your photocoupler input can be turned on or off from the output terminal (Yn).

- Precautions for inputs (X)
  - The input terminals are intended for NPN transistor output or for connection to relays. You cannot connect an active circuit to the PNP transistor output.

- Precautions for outputs (Y)
  - Connect an active terminal (+0.1 V to +30.0 V) that is under 30 V DC and up to a maximum current of 80 mA. If the voltage exceeds 30 V, a malfunction will occur.
  - You cannot connect an AC power source.
  - You cannot use high-load devices that exceed a current of 80 mA (solenoids, DC motors, etc.).
  - Operation cannot be done by connecting a negative voltage (such as -24 V).
  - The contacts have polarity, the current flows from Yn to C.
  - C (COM) and N (GND) are connected inside the product.

Connector Pin Specifications for Terminals for External Input/Output Signals

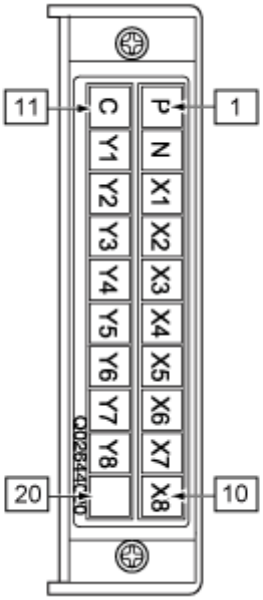

Pin No.	I/O	Signal Name	Description	Electric Conditions (Voltage, Current (Max))
1	-	+24V	Power Supply	500 mA
2	-	GND	SIGNAL GROUND	Connects to COM internally
3	Input	X1	Activate Apply	9.7 mA (internal voltage 24 V ±5%)
4	Input	X2	Activate Apply (level)	9.7 mA (internal voltage 24 V ±5%)
5	Input	X3	External Reset	9.7 mA (internal voltage 24 V ±5%)
6	Input	X4	Reserved	9.7 mA (internal voltage 24 V ±5%)
7	Input	X5		9.7 mA (internal voltage 24 V ±5%)
8	Input	X6		9.7 mA (internal voltage 24 V ±5%)
9	Input	X7		9.7 mA (internal voltage 24 V ±5%)
10	Input	X8		9.7 mA (internal voltage 24 V ±5%)
11	-	COM	Output common	Connects to GND internally
12	Output	Y1	Applying Completion	80 mA, 30 VDC (minimum current 200 uA)
13	Output	Y2	All Error	80 mA, 30 VDC (minimum current 200 uA)
14	Output	Y3	Media Remaining Amount	80 mA, 30 VDC (minimum current 200 uA)

Pin No.	I/O	Signal Name	Description	Electric Conditions (Voltage, Current (Max))
15	Output	Y4	Apply Ready	80 mA, 30 VDC (minimum current 200 uA)
16	Output	Y5	Reserved	80 mA, 30 VDC (minimum current 200 uA)
17	Output	Y6		80 mA, 30 VDC (minimum current 200 uA)
18	Output	Y7		80 mA, 30 VDC (minimum current 200 uA)
19	Output	Y8		80 mA, 30 VDC (minimum current 200 uA)
20	-	-	-	Not in use

Timing Chart of the External Input Signal

Item	Input Waveform
Activate Apply	Application operation (including pass operation) is done according to signal inputs. Detected by rise in the signal. **Delivery Method: For Print and Wait** 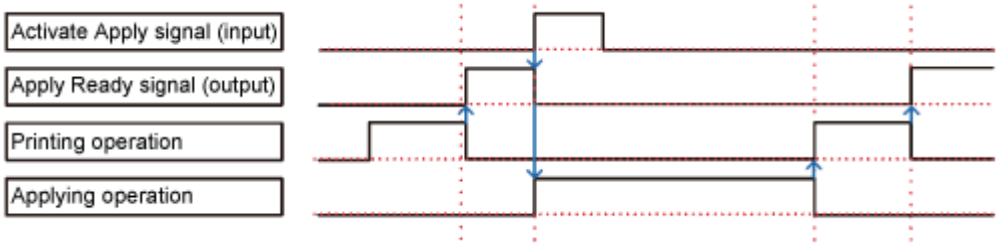 **Delivery Method: For Wait Printing** 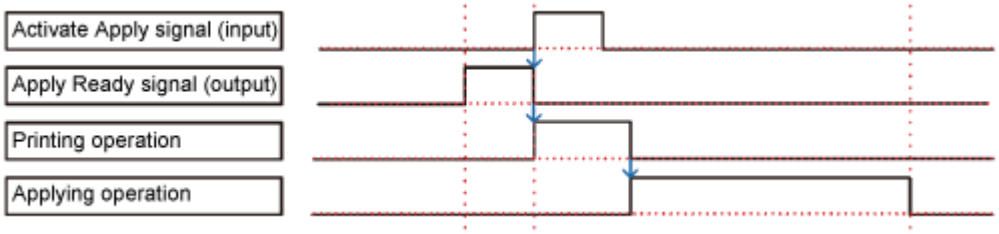

Item	Input Waveform
	• A performance overload error occurs when there is input when a label cannot be applied. (Including pass operations) • You can select [Timing] or [Position] for the position to apply the labels. • The [Activate Apply] signal changes the detection timing according to the conveyor speed and the package length settings.
Activate Apply (Level)	Application operation (including pass operation) is done according to signal inputs. Detected by rise in the signal, and application is done when Apply Ready reaches ON level. **Delivery Method: For Print and Wait** 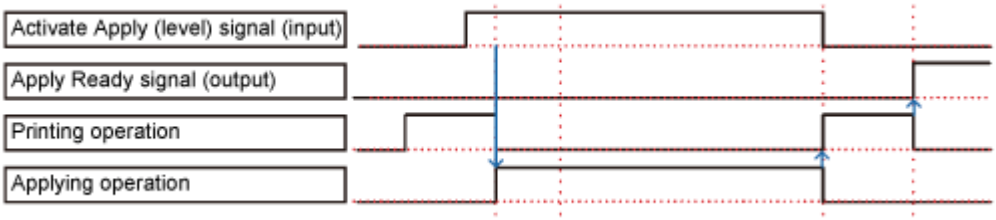 **Delivery Method: For Wait Printing** 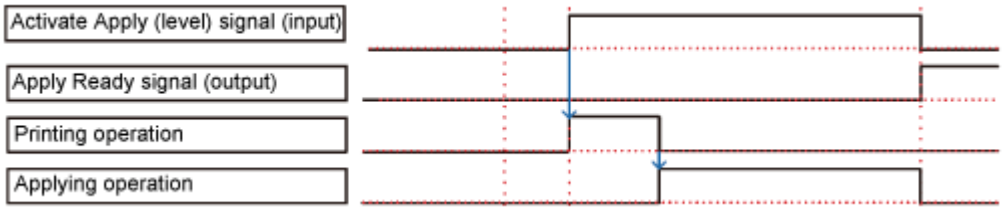 • Keep this signal on until Applying Completion or an error occurs. • You can select [Timing] or [Position] for the position to apply the labels. • This signal does not monitor for performance overload errors. • This signal does not start the application operations even if the product is ready to apply a label as the next process when the application operation has been started and ON status is maintained. • Turn off this signal after application is complete if the next process is applying a label.
External Reset	Errors are cleared by inputting a signal when an error occurs. Detected by rise in the signal.

Item	Input Waveform
	 • Only enabled during an error. • Does the same operation as the button.

Timing Chart of the External Output Signal

Item	Output Waveform
Applying Completion	Output when the product returns to origin after an application operation. **Completion Output Time: For 200 ms/300 ms/500 ms/1000 ms** 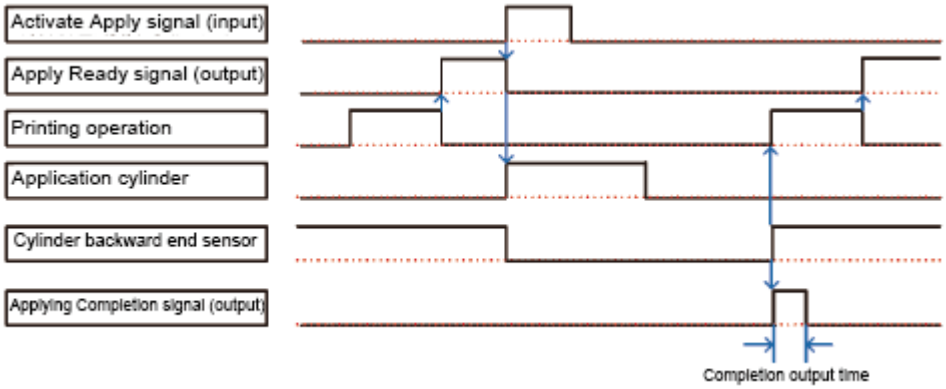 **Completion Output Time: If Activation Signal Is Off** 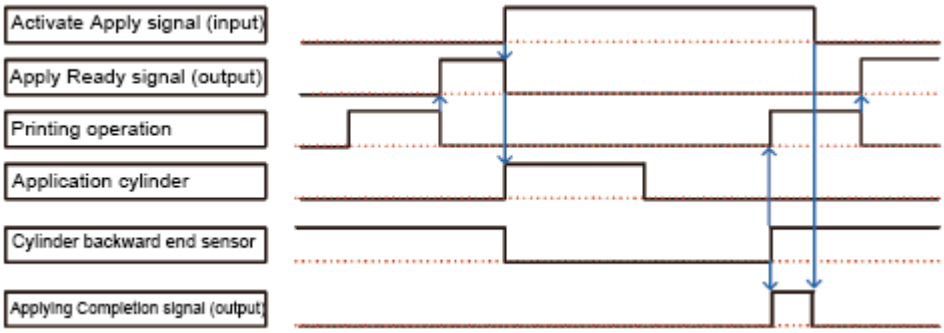

Item	Output Waveform
	• You can set the completion output time to [Activation Signal Off], [200ms], [300ms], [500ms], or [1000ms]. • For [Activation Signal Off], signal is output until the [Activate Apply] signal or the [Activate Apply (Level)] signal turns off. ([Activation Signal Off] is used if the [Activate Apply] signal or the [Activate Apply (Level)] and the [Applying Completion] signal or the [Applying Completion (Backward)] do a handshake.) 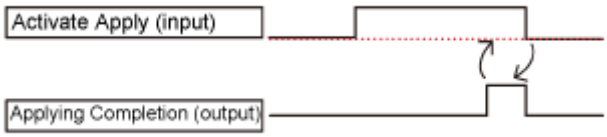 • If the completion output time is set to [Activation Signal Off], turn off the [Activate Apply] signal or the [Activate Apply (Level)] signal after the [Applying Completion] signal turns on. (Output is not done if the [Activate Apply] signal or the [Activate Apply (Level)] signal turns off when application is complete.)
All Error Signal	Output when various errors occur. 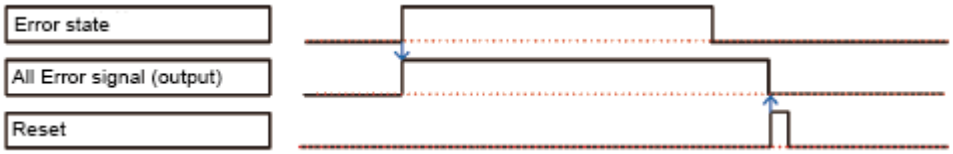 • After the cause of an error is cleared, output continues until reset is done.
Media Remaining Amount	Output when the amount of labels or ribbon that is remaining is low. 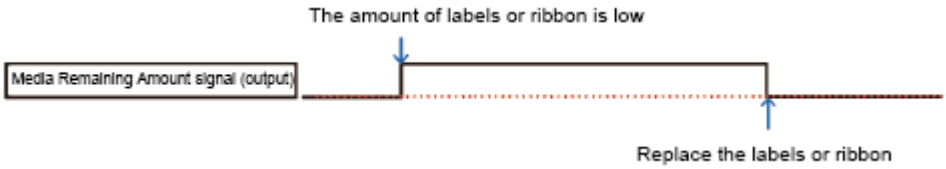 • Output until the labels or ribbon are replaced.
Apply Ready	Output when it is possible to input the [Activate Apply] signal. **Delivery Method: For Print and Wait**

Item	Output Waveform
	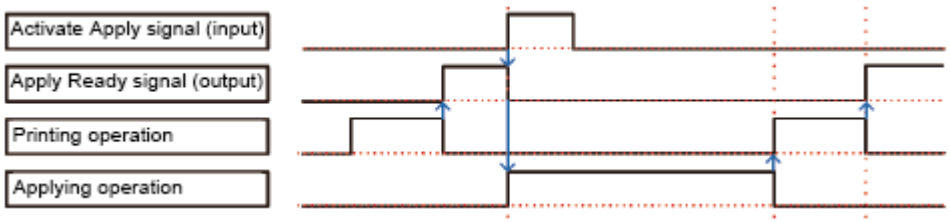 **Delivery Method: For Wait Printing** 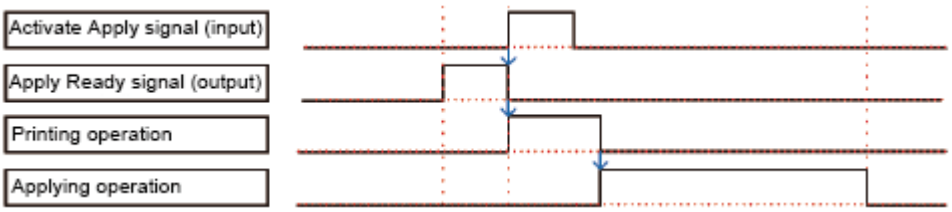 • Signal is output until the [Activate Apply] signal or the [Activate Apply (Level)] signal is input or until an error occurs. • The conditions for this signal include the package mask timing (calculated from the values set for [Conveyor Speed] and [Product Length]). (If the package mask time is longer than one cycle of the product, this signal is output after the package mask time passes during the next cycle.)

Timing Chart for Cylinder Jet (Print and Wait)

This timing chart is for the following conditions.

Labeling format

Cylinder jet (CJ)

Label delivery method

Print and Wait

CJ Print and Wait

Wait at Front End

- Printing occurs after print data is received completely and immediately when product state is correct.

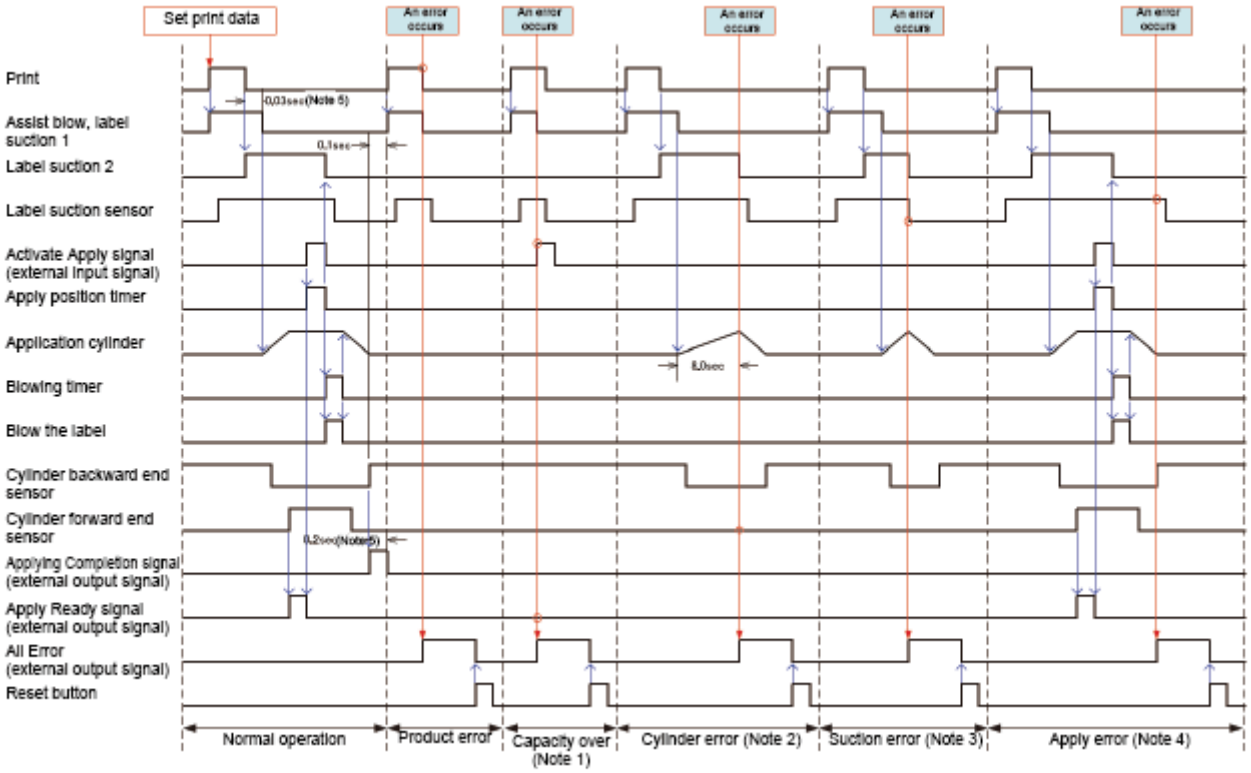

Note 1

This error is because an [Activate Apply] signal was input when the [Apply Ready] signal was not on.

Note 2

This error is because the cylinder forward end sensor does not turn on, even when the cylinder has been on for 8 seconds.

Note 3

This error is because the label suction sensor is off (no label is present) while suction is in standby.

Note 4

Error processing is done when suction check sensor is on (a label is present) when the cylinder returns to origin. (Label Remain Error Check Select: Return to Origin)

Note 5

These are the values set for Suction Switching Check Time and Completion Output Time.

Timing Chart for Cylinder Jet (Wait Printing)

This timing chart is for the following conditions.

Labeling format

Cylinder jet (CJ)

Label delivery method

Wait Printing

- The [Apply Ready] signal output conditions are when all input devices have mechanically returned to origin normally and there is data that has been edited completely.

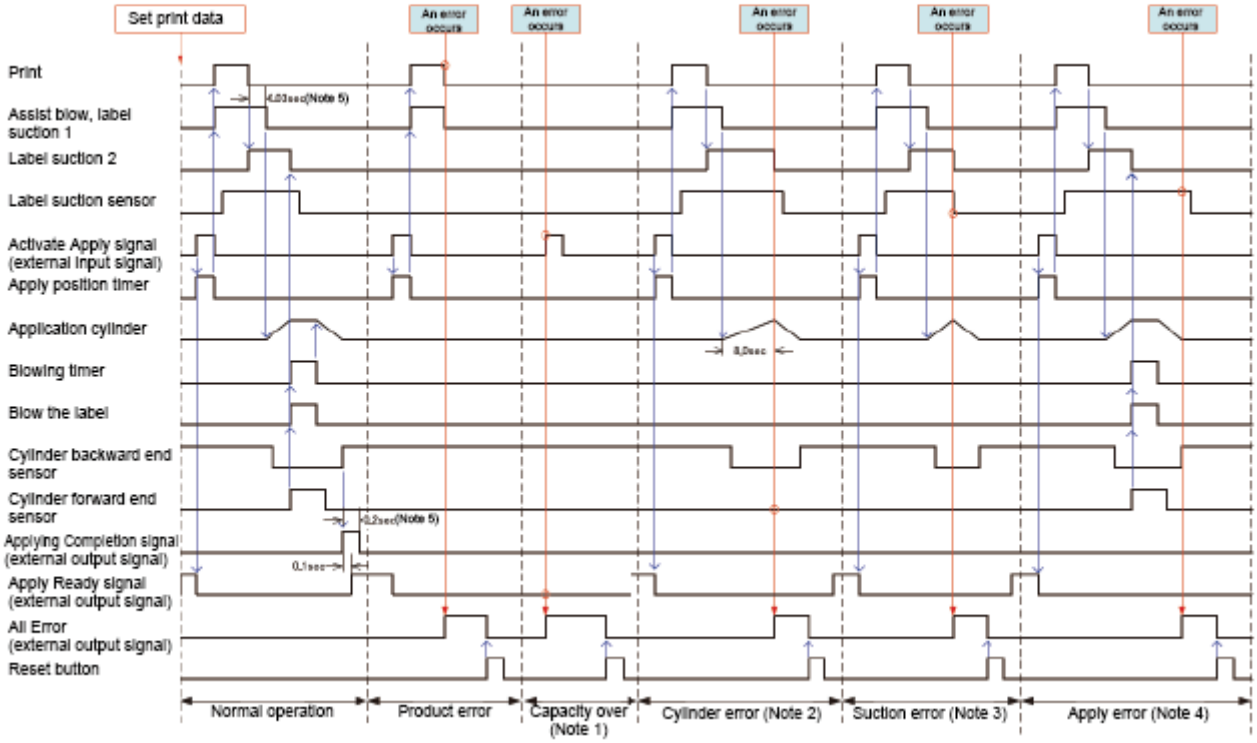

Note 1

This error is because an [Activate Apply] signal was input when the [Apply Ready] signal was not on.

Note 2

This error is because the cylinder forward end sensor does not turn on, even when the cylinder has been on for 8 seconds.

Note 3

This error is because the label suction sensor is off (no label is present) while suction is in standby.

Note 4

Error processing is done when suction check sensor is on (a label is present) when the cylinder returns to origin. (Label Remain Error Check Select: Return to Origin)

Note 5

These are the values set for Suction Switching Check Time and Completion Output Time.

Timing Chart for Pressure Jet (Print and Wait)

This timing chart is for the following conditions.

Labeling format

Pressure jet (PJ)

Label delivery method

Print and Wait

Blow Action at PJ Miss

Disabled

- Printing occurs after print data is received completely and immediately when LR state is correct.

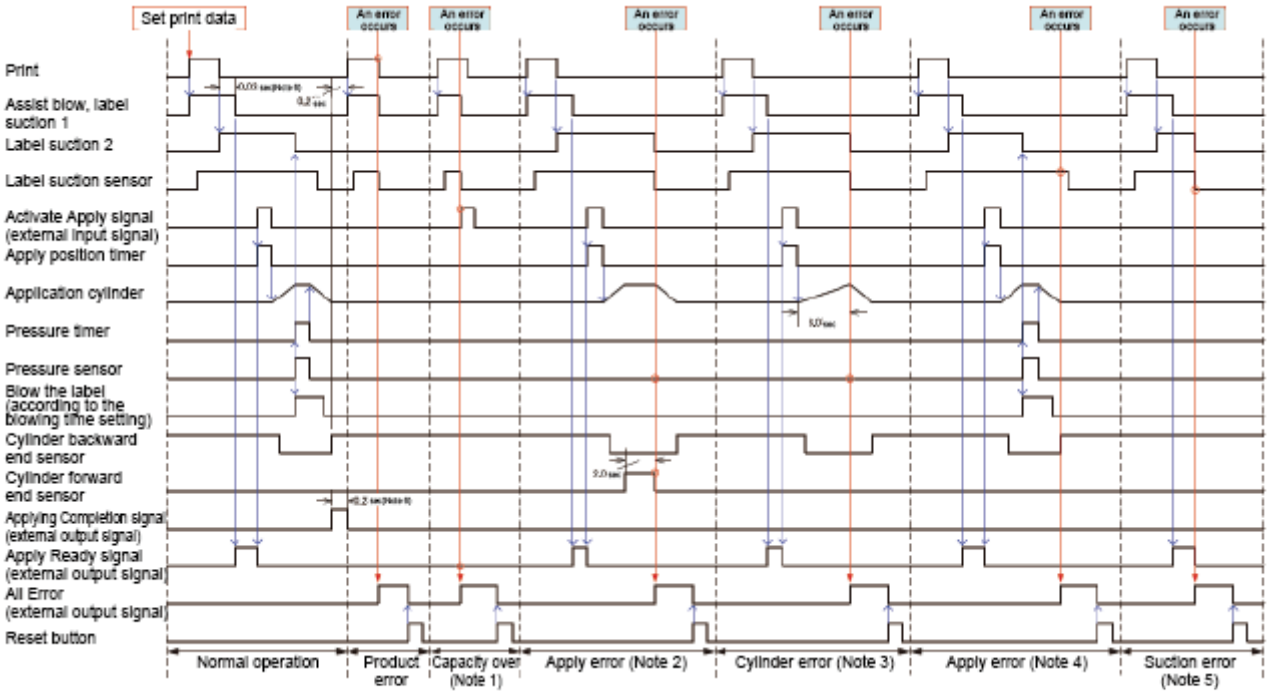

Note 1

This error is because an [Activate Apply] signal was input when the [Apply Ready] signal was not on.

Note 2

This error is because the pressure sensor does not turn on, even when the cylinder forward end sensor turns on.

Note 3

This error is because the pressure sensor does not turn on, even when the cylinder has been on for 8 seconds.

Note 4

Error processing is done when label suction sensor is on (a label is present) when the cylinder returns to origin (cylinder backward end sensor is on). (Label Remain Error Check Select: Return to Origin)

Note 5

This error is because the label suction sensor is off (no label is present) while suction is in standby.

Note 6

These are the values set for Suction Switching Check Time and Completion Output Time.

Timing Chart for Pressure Jet (Wait Printing)

This timing chart is for the following conditions.

Labeling format

Pressure jet (PJ)

Label delivery method

Wait Printing

Blow Action at PJ Miss

Disabled

- The [Apply Ready] signal output conditions are when all input devices have mechanically returned to origin normally and there is data that has been edited completely.

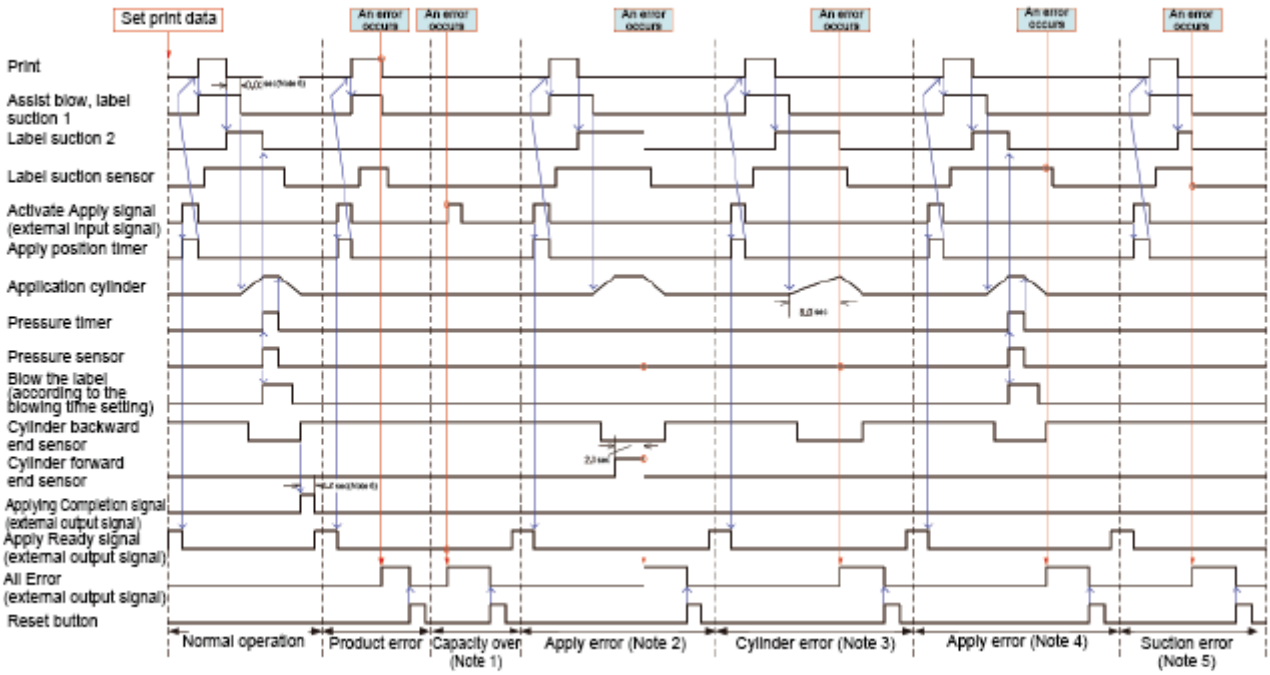

Note 1

This error is because an [Activate Apply] signal was input when the [Apply Ready] signal was not on.

Note 2

This error is because the pressure sensor does not turn on, even when the cylinder forward end sensor turns on.

Note 3

This error is because the pressure sensor does not turn on, even when the cylinder has been on for 8 seconds.

Note 4

Error processing is done when label suction sensor is on (a label is present) when the cylinder returns to origin (cylinder backward end sensor is on). (Label Remain Error Check Select: Return to Origin)

Note 5

This error is because the label suction sensor is off (no label is present) while suction is in standby.

Note 6

These are the values set for Suction Switching Check Time and Completion Output Time.

Built-in Functions

Item	Description
Built-in Functions	• Status return • Graphic • Sequential number • Form overlay • Character modification • Black/white inversion • Ruled line • Dump list • Format registration • Outline font • Outline modification • Zero slash switching • Guidance video • Displays 31 languages • Cleaning notification • Calendar (Optional) • Password lock • Logo, font download • LCD turns off • Shows total labels printed • Reprint • Power on in Online mode • Feed after error • Feed at power on • Command error indication • Non-standard mode • Priority settings
Self-diagnosis Functions	• Broken head element check • Head open detection • Media size check • Paper end detection • Label near end detection • Ribbon end detection • Ribbon near end detection

Item	Description
	• Test print • Nip roller open detection • Abnormal liner winder motor detection • Label suction detection • Label pressing confirmed • Application cylinder origin detection
Adjustment Functions	• Print darkness • Print position • Media stop position • Buzzer • LCD brightness

- Specifications are subject to change without notice.

Printer Languages

- SBPL (Includes XML support)
- SZPL
- SDPL
- SIPL
- STCL
- SEPL
- AEP

Standards

Item	Description
Noise (EMC) Standards	EN55024, EN55032 EN61000 3-2, EN61000 3-3 KC
Safety Standards	CB IEC 60950-1 EN60950-1 KC
Environmental Standard	Compatible with the RoHS directive

- Specifications are subject to change without notice.

Usable Media and Ribbon

Media

- Use the products from our specified suppliers.

Type

- Media roll (Face-in wound/face-out wound)

Size

Item	Description
Media Length	30 to 120 mm (1.18" to 4.72")
Media Length (With Liner)	33 to 123 mm (1.30" to 4.84")
Media Width	30 to 117 mm (1.18" to 4.61")
Media Width (With Liner)	33 to 120 mm (1.30" to 4.72")
Diameter of Liner Winding	Maximum φ160 mm (6.3")

- The usable media sizes, the output speed and print quality vary depending on the media specification, media and ribbon combination, product settings and output environment. It is recommended to perform a test print with the media and ribbon to be used in advance.

Roll Diameter (Media Roll)

- Maximum φ280 mm (11.02") (label roll length is less than 300 m (984.25 feet))

Core Diameter (Media Roll)

- φ76.2 mm (φ3")

Weight

- Max. 7 kg (15.43 lbs.)

Thickness

- 140 to 240 µm (0.14 to 0.24 mm (0.006" to 0.009"))

Ribbon

- Use the products from our specified suppliers.

Item	Description
Size	**Length** Maximum 600 m (1968.5 feet) **Width** 39.5 to 111 mm (1.55" to 4.37") • When the width of the ribbon is 39.5 mm (1.55"), the maximum length is 450 m (1476.4 feet). • The maximum length of the ribbon varies depending on the ribbon type. • Use the ribbon that is wider than the media.
Wind Direction	Both face-out/face-in
Winding Method	Coreless

Usable Fonts and Barcodes

Fonts

Bitmap Fonts

Item	Description
U	9 dots H x 5 dots W
S	15 dots H x 8 dots W
M	20 dots H x 13 dots W
WB	30 dots H x 18 dots W
WL	52 dots H x 28 dots W
XU	9 dots H x 5 dots W
XS	17 dots H x 17 dots W
XM	24 dots H x 24 dots W
XB	48 dots H x 48 dots W
XL	48 dots H x 48 dots W
X20	9 dots H x 5 dots W
X21	17 dots H x 17 dots W
X22	24 dots H x 24 dots W
X23	48 dots H x 48 dots W
X24	48 dots H x 48 dots W
OCR-A	**203 dpi** 22 dots H x 15 dots W **305 dpi** 33 dots H x 22 dots W
OCR-B	**203 dpi** 24 dots H x 20 dots W **305 dpi** 36 dots H x 30 dots W
JIS208 Kanji Fonts (Mincho/Gothic)	• 16 dots H x 16 dots W • 24 dots H x 24 dots W

Item	Description
	• 22 dots H x 22 dots W • 32 dots H x 32 dots W • 40 dots H x 40 dots W
JIS0213 Kanji Fonts (Gothic)	• 16 dots H x 16 dots W • 24 dots H x 24 dots W • 22 dots H x 22 dots W • 32 dots H x 32 dots W • 40 dots H x 40 dots W
Compatible Kanji Fonts (Mincho/ Gothic)	• 16 dots H x 16 dots W • 24 dots H x 24 dots W
Simplified Chinese Characters	• 16 dots H x 16 dots W • 24 dots H x 24 dots W
Traditional Chinese Characters	• 24 dots H x 24 dots W
Korean Fonts	• 16 dots H x 16 dots W • 24 dots H x 24 dots W

Scalable Fonts

Item	Description
Rasterized Font	• SATO CG Sleek • SATO CG Stream • SATO 0 • SATO Alpha Bold Condensed • SATO Beta Bold Italic • SATO Folio Bold • SATO Futura Medium Condensed • SATO Gamma • SATO OCR-A • SATO OCR-B • SATO Sans • SATO Serif • SATO Symbol Set • SATO WingBats
Rasterized Font (Multilingual)	• SATO Vica • SATO Hebe Sans

Item	Description
	• SATO Hebe Sans Arabic • SATO Hebe Sans Thai • SATO Hebe Sans Hebrew • SATO Hebe Sans Hindi • SATO Gothic Traditional Chinese • SATO Gothic Japanese • SATO Gothic Simplified Chinese • SATO Gothic Korean • SATO Silver Serif • SATO Mincho Traditional Chinese • SATO Mincho Japanese • SATO Mincho Simplified Chinese • SATO Mincho Korean • SATO Roman Arabic
Outline Fonts	• Helvetica Outline Font • JIS208 Kanji Outline Fonts

- Specifications are subject to change without notice.

U Font

The U font is a bitmap font with a basic size of 9 dots H x 5 dots W.

This supports the fixed pitch only.

The figure below is a font sample when the code page 858 is used.

	2	3	4	5	6	7	8	9	A	B	C	D	E	F
0		0	@	P	`	p	Ç	É	á	∅		ð	ó	–
1	!	1	A	Q	a	q	ü	æ	í			Ð	ß	±
2	"	2	B	R	b	r	é	Æ	ó			Ê	Ô	‗
3	#	3	C	S	c	s	â	ô	ú			Ë	Ò	¾
4	$	4	D	T	d	t	ä	ö	ñ			È	õ	¶
5	%	5	E	U	e	u	à	ò	Ñ	Á		€	Õ	§
6	&	6	F	V	f	v	å	û	ª	Â	ã	Í	µ	÷
7	'	7	G	W	g	w	ç	ù	º	À	Ã	Î	Þ	¸
8	(	8	H	X	h	x	ê	ÿ	¿	©		Ï	þ	°
9	)	9	I	Y	i	y	ë	Ö	®				Ú	¨
A	*	:	J	Z	j	z	è	Ü	¬				Û	•
B	+	;	K	[	k	{	ï	ø	½				Ù	¹
C	,	<	L	\	l	¦	î	£	¼				ý	³
D	–	=	M	]	m	}	ì	Ø	¡	¢		¦	Ý	²
E	.	>	N	^	n	~	Ä	×	«	¥		ì	¯	
F	/	?	O	_	o	▒	Å	ƒ	»		▒		´	

- The character set is changed according to the [SBPL] > [Font Settings] > [Code Page] settings in the [Applications] menu or the code page specified using commands.

S Font

The S font is a bitmap font with a basic size of 15 dots H x 8 dots W.

This supports the fixed pitch only.

The figure below is a font sample when the code page 858 is used.

	2	3	4	5	6	7	8	9	A	B	C	D	E	F
0		0	@	P	'	p	Ç	É	á	0		ð	ó	–
1	!	1	A	Q	a	q	ü	æ	í			Ð	β	±
2	"	2	B	R	b	r	é	Æ	ó			Ê	ô	‗
3	#	3	C	S	c	s	â	ô	ú			Ë	ò	¾
4	$	4	D	T	d	t	ä	ö	ñ			È	õ	¶
5	%	5	E	U	e	u	à	ò	Ñ	Á		€	Õ	§
6	&	6	F	V	f	v	å	û	ª	Â	ã	í	µ	÷
7	'	7	G	W	g	w	ç	ù	º	À	Ã	Î	Þ	¸
8	(	8	H	X	h	x	ê	ÿ	¿	©		Ï	þ	°
9	)	9	I	Y	i	y	ë	Ö	®				Ú	¨
A	*	:	J	Z	j	z	è	Ü	¬				Û	•
B	+	;	K	[	k	{	ï	Ø	½				Ù	¹
C	,	<	L	\	l	¦	î	£	¼				ý	³
D	–	=	M	]	m	}	ì	Ø	¡	¢		¦	Ý	²
E	.	>	N	^	n	~	Ä	×	«	¥		Ì	¯	
F	/	?	O	_	o	▒	Å	ƒ	»		¤		´	

- The character set is changed according to the [SBPL] > [Font Settings] > [Code Page] settings in the [Applications] menu or the code page specified using commands.

M Font

The M font is a bitmap font with a basic size of 20 dots H x 13 dots W.

This supports the fixed pitch only.

The figure below is a font sample when the code page 858 is used.

	2	3	4	5	6	7	8	9	A	B	C	D	E	F
0		0	@	P	'	p	Ç	É	á	0		ð	ó	–
1	!	1	A	Q	a	q	ü	æ	í			Ð	ß	±
2	”	2	B	R	b	r	é	Æ	ó			Ê	Ô	‗
3	#	3	C	S	c	s	â	ô	ú			Ë	Ò	¾
4	$	4	D	T	d	t	ä	ö	ñ			È	õ	¶
5	%	5	E	U	e	u	à	ò	Ñ	Á		€	Õ	§
6	&	6	F	V	f	v	å	û	ª	Â	ã	Í	µ	÷
7	’	7	G	W	g	w	ç	ù	º	À	Ã	Î	þ	¸
8	(	8	H	X	h	x	ê	ÿ	¿	©		Ï	Þ	°
9	)	9	I	Y	i	y	ë	Ö	®				Ú	¨
A	*	:	J	Z	j	z	è	Ü	¬				Û	•
B	+	;	K	[	k	{	ï	ø	½				Ù	¹
C	,	<	L	\	l	¦	î	£	¼				ý	³
D	–	=	M	]	m	}	ì	Ø	¡	¢		¦	Ý	²
E	.	>	N	^	n	~	Ä	×	«	¥		Ì	¯	
F	/	?	O	_	o		Å	ƒ	»		¤		´	

- The character set is changed according to the [SBPL] > [Font Settings] > [Code Page] settings in the [Applications] menu or the code page specified using commands.

WB Font

The WB font is a bitmap font with a basic size of 30 dots H x 18 dots W.

This supports the fixed pitch only.

The figure below is a font sample when the code page 858 is used.

	2	3	4	5	6	7	8	9	A	B	C	D	E	F
0		0	@	P	`	p	Ç	É	á	Ø		ð	ó	-
1	!	1	A	Q	a	q	ü	æ	í			Ð	ß	±
2	"	2	B	R	b	r	é	Æ	ó			Ê	ô	‗
3	#	3	C	S	c	s	â	ô	ú			Ë	ò	¾
4	$	4	D	T	d	t	ä	ö	ñ			È	õ	¶
5	%	5	E	U	e	u	à	ò	Ñ	Á		€	Õ	§
6	&	6	F	V	f	v	å	û	ª	Â	ã	Í	µ	÷
7	'	7	G	W	g	w	ç	ù	º	À	Ã	Î	Þ	¸
8	(	8	H	X	h	x	ê	ÿ	¿	©		Ï	Þ	°
9	)	9	I	Y	i	y	ë	Ö	®				Ú	¨
A	*	:	J	Z	j	z	è	Ü	¬				Û	•
B	+	;	K	[	k	{	ï	ø	½				Ù	¹
C	,	<	L	\	l	¦	î	£	¼				ý	³
D	-	=	M	]	m	}	ì	Ø	¡	¢		¦	Ý	²
E	.	>	N	^	n	~	Ä	×	«	¥		Ì	¯	
F	/	?	O	_	o	▒	Å	ƒ	»		¤		´	

- The character set is changed according to the [SBPL] > [Font Settings] > [Code Page] settings in the [Applications] menu or the code page specified using commands.

WL Font

The WL font is a bitmap font with a basic size of 52 dots H x 28 dots W.

This supports the fixed pitch only.

The figure below is a font sample when the code page 858 is used.

	2	3	4	5	6	7	8	9	A	B	C	D	E	F
0		0	@	P	’	p	Ç	É	á	0		ð	ó	-
1	!	1	A	Q	a	q	ü	æ	í			Ð	ß	±
2	”	2	B	R	b	r	é	Æ	ó			Ê	Ô	‗
3	#	3	C	S	c	s	â	ô	ú			Ë	Ò	¾
4	$	4	D	T	d	t	ä	ö	ñ			È	õ	¶
5	%	5	E	U	e	u	à	ò	Ñ	Á		€	Õ	§
6	&	6	F	V	f	v	å	û	ª	Â	ã	Í	µ	÷
7	’	7	G	W	g	w	ç	ù	º	À	Ã	Î	þ	,
8	(	8	H	X	h	x	ê	ÿ	¿	©		Ï	Þ	°
9	)	9	I	Y	i	y	ë	Ö	®				Ú	¨
A	*	:	J	Z	j	z	è	Ü	¬				Û	·
B	+	;	K	[	k	{	ï	ø	½				Ù	¹
C	,	<	L	\	l	¦	î	£	¼				ý	³
D	-	=	M	]	m	}	ì	Ø	¡	¢		¦	Ý	²
E	.	>	N	^	n	~	Ä	×	«	¥		Ì	¯	
F	/	?	O	_	o		Å	ƒ	»		¤		´	

- The character set is changed according to the [SBPL] > [Font Settings] > [Code Page] settings in the [Applications] menu or the code page specified using commands.

XU Font

The XU font is a bitmap font with a basic size of 9 dots H x 5 dots W.

You can select fixed pitch or proportional pitch.

The figure below is a font sample when the code page 858 is used.

	2	3	4	5	6	7	8	9	A	B	C	D	E	F
0		0	@	P	`	p	Ç	É	á	∅		ð	ó	–
1	!	1	A	Q	a	q	ü	æ	í			Ð	ß	±
2	"	2	B	R	b	r	é	Æ	ó			Ê	ô	‗
3	#	3	C	S	c	s	â	ô	ú			Ë	ò	¾
4	$	4	D	T	d	t	ä	ö	ñ			È	õ	¶
5	%	5	E	U	e	u	à	ò	Ñ	Á		€	Õ	§
6	&	6	F	V	f	v	å	û	ª	Â	ã	í	µ	÷
7	'	7	G	W	g	w	ç	ù	º	À	Ã	Î	Þ	¸
8	(	8	H	X	h	x	ê	ÿ	¿	©		Ï	þ	°
9	)	9	I	Y	i	y	ë	Ö	®				Ú	¨
A	*	:	J	Z	j	z	è	Ü	¬				Û	·
B	+	;	K	[	k	{	ï	ø	½				Ù	¹
C	,	<	L	\	l	¦	î	£	¼				ý	³
D	–	=	M	]	m	}	ì	Ø	¡	¢		¦	Ý	²
E	.	>	N	^	n	~	Ä	×	«	¥		ì	¯	
F	/	?	O	_	o	▒	Å	ƒ	»		▒		´	

- To select proportional pitch, enable [SBPL] > [Font Settings] > [Proportional] in the [Applications] menu, or specify with the command.
- The character set is changed according to the [SBPL] > [Font Settings] > [Code Page] settings in the [Applications] menu or the code page specified using commands.

XS Font

The XS font is a bitmap font with a basic size of 17 dots H x 17 dots W.

You can select fixed pitch or proportional pitch.

The figure below is a font sample when the code page 858 is used.

	2	3	4	5	6	7	8	9	A	B	C	D	E	F
0		0	@	P	'	p	Ç	É	á	▒		ð	Ó	-
1	!	1	A	Q	a	q	ü	æ	í			Ð	ß	±
2	"	2	B	R	b	r	é	Æ	ó			Ê	Ô	‗
3	#	3	C	S	c	s	â	ô	ú			Ë	Ò	¾
4	$	4	D	T	d	t	ä	ö	ñ			È	õ	¶
5	%	5	E	U	e	u	à	ò	Ñ	Á		€	Õ	§
6	&	6	F	V	f	v	å	û	ª	Â	ã	Í	µ	÷
7	'	7	G	W	g	w	ç	ù	º	À	Ã	Î	þ	¸
8	(	8	H	X	h	x	ê	ÿ	¿	©		Ï	Þ	°
9	)	9	I	Y	i	y	ë	Ö	®				Ú	¨
A	*	:	J	Z	j	z	è	Ü	¬				Û	•
B	+	;	K	[	k	{	ï	ø	½				Ù	¹
C	,	<	L	\	l	¦	î	£	¼				ý	³
D	–	=	M	]	m	}	ì	Ø	¡	æ		¦	Ý	²
E	.	>	N	^	n	~	Ä	×	«	¥		Ì	¯	
F	/	?	O	_	o	■	Å	ƒ	»		¤		´	

- To select proportional pitch, enable [SBPL] > [Font Settings] > [Proportional] in the [Applications] menu, or specify with the command.
- The character set is changed according to the [SBPL] > [Font Settings] > [Code Page] settings in the [Applications] menu or the code page specified using commands.

XM Font

The XM font is a bitmap font with a basic size of 24 dots H x 24 dots W.

You can select fixed pitch or proportional pitch.

The figure below is a font sample when the code page 858 is used.

	2	3	4	5	6	7	8	9	A	B	C	D	E	F
0		0	@	P	`	p	Ç	É	á	0		ð	Ó	-
1	!	1	A	Q	a	q	ü	æ	í			Ð	ß	±
2	”	2	B	R	b	r	é	Æ	ó			Ê	Ô	‗
3	#	3	C	S	c	s	â	ô	ú			Ë	Ò	¾
4	$	4	D	T	d	t	ä	ö	ñ			È	õ	¶
5	%	5	E	U	e	u	à	ò	Ñ	Á		€	Õ	§
6	&	6	F	V	f	v	å	û	ª	Â	ã	Í	µ	÷
7	’	7	G	W	g	w	ç	ù	º	À	Ã	Î	þ	¸
8	(	8	H	X	h	x	ê	ÿ	¿	©		Ï	Þ	°
9	)	9	I	Y	i	y	ë	Ö	®				Ú	¨
A	*	:	J	Z	j	z	è	Ü	¬				Û	•
B	+	;	K	[	k	{	ï	ø	½			▒	Ù	¹
C	,	<	L	\	l	¦	î	£	¼				ý	³
D	—	=	M	]	m	}	ì	Ø	¡	¢		¦	Ý	²
E	.	>	N	^	n	~	Ä	×	«	¥		Ì	¯	
F	/	?	O	_	o	▒	Å	ƒ	»		¤		´	

- To select proportional pitch, enable [SBPL] > [Font Settings] > [Proportional] in the [Applications] menu, or specify with the command.
- The character set is changed according to the [SBPL] > [Font Settings] > [Code Page] settings in the [Applications] menu or the code page specified using commands.

XB Font

The XB font is a bitmap font with a basic size of 48 dots H x 48 dots W.

You can select fixed pitch or proportional pitch.

The figure below is a font sample when the code page 858 is used.

	2	3	4	5	6	7	8	9	A	B	C	D	E	F
0		0	@	P	`	p	Ç	É	á	0		ð	Ó	–
1	!	1	A	Q	a	q	ü	æ	í			Ð	β	±
2	″	2	B	R	b	r	é	Æ	ó			Ê	Ô	‗
3	#	3	C	S	c	s	â	ô	ú			Ë	Ò	¾
4	$	4	D	T	d	t	ä	ö	ñ			È	õ	¶
5	%	5	E	U	e	u	à	ò	Ñ	Á		€	Õ	§
6	&	6	F	V	f	v	å	û	ª	Â	ã	Í	µ	÷
7	′	7	G	W	g	w	ç	ù	º	À	Ã	Î	þ	¸
8	(	8	H	X	h	x	ê	ÿ	¿	©		Ï	Þ	°
9	)	9	I	Y	i	y	ë	Ö	®				Ú	¨
A	*	:	J	Z	j	z	è	Ü	¬				Û	•
B	+	;	K	[	k	{	ï	ø	½				Ù	¹
C	,	<	L	\	l	¦	î	£	¼				ý	³
D	–	=	M	]	m	}	ì	Ø	¡	¢		¦	Ý	²
E	.	>	N	^	n	~	Ä	×	«	¥		Ì	¯	
F	/	?	O	_	o		Å	ƒ	»		¤		´	

- To select proportional pitch, enable [SBPL] > [Font Settings] > [Proportional] in the [Applications] menu, or specify with the command.
- The character set is changed according to the [SBPL] > [Font Settings] > [Code Page] settings in the [Applications] menu or the code page specified using commands.

XL Font

The XL font is a bitmap font with a basic size of 48 dots H x 48 dots W.

You can select fixed pitch or proportional pitch.

The figure below is a font sample when the code page 858 is used.

	2	3	4	5	6	7	8	9	A	B	C	D	E	F
0		0	@	P	‘	p	Ç	É	á	0		ð	Ó	-
1	!	1	A	Q	a	q	ü	æ	í			Ð	β	±
2	″	2	B	R	b	r	é	Æ	ó			Ê	Ô	‗
3	#	3	C	S	c	s	â	ô	ú			Ë	Ò	¾
4	$	4	D	T	d	t	ä	ö	ñ			È	õ	¶
5	%	5	E	U	e	u	à	ò	Ñ	Á		€	Õ	§
6	&	6	F	V	f	v	å	û	ª	Â	ã	Í	µ	÷
7	′	7	G	W	g	w	ç	ù	º	À	Ã	Î	þ	¸
8	(	8	H	X	h	x	ê	ÿ	¿	©		Ï	Þ	°
9	)	9	I	Y	i	y	ë	Ö	®				Ú	¨
A	*	:	J	Z	j	z	è	Ü	¬				Û	·
B	+	;	K	[	k	{	ï	ф	½				Ù	¹
C	,	<	L	\	l	¦	î	£	¼				ý	³
D	−	=	M	]	m	}	ì	Ø	¡	¢		¦	Ý	²
E	.	>	N	^	n	~	Ä	×	«	¥		Ì	¯	
F	/	?	O	_	o		Å	ƒ	»		¤		´	

- To select proportional pitch, enable [SBPL] > [Font Settings] > [Proportional] in the [Applications] menu, or specify with the command.
- The character set is changed according to the [SBPL] > [Font Settings] > [Code Page] settings in the [Applications] menu or the code page specified using commands.

X20 Font

The X20 font is a bitmap font with a basic size of 9 dots H x 5 dots W.

This supports the fixed pitch only.

A font sample is shown in the figure below.

	2	3	4	5	6	7	8	9	A	B	C	D	E	F
0		0	@	P		p				ー	タ	ミ		
1	!	1	A	Q	a	q				ア	チ	ム		
2	"	2	B	R	b	r				イ	ツ	メ		
3	#	3	C	S	c	s				ウ	テ	モ		
4	$	4	D	T	d	t				エ	ト	ヤ		
5	%	5	E	U	e	u			・	オ	ナ	ユ		
6	&	6	F	V	f	v			ヲ	カ	ニ	ヨ		
7	'	7	G	W	g	w				キ	ヌ	ラ		
8	(	8	H	X	h	x				ク	ネ	リ		
9	)	9	I	Y	i	y				ケ	ノ	ル		
A	*	:	J	Z	j	z				コ	ハ	レ		
B	+	;	K	[	k	{				サ	ヒ	ロ		
C	,	<	L	¥	l	|				シ	フ	ワ		
D	-	=	M		m	}				ス	ヘ	ン		
E	.	>	N		n	‾				セ	ホ	゛		
F	/	?	O		o					ソ	マ	゜		

X21 Font

The X21 font is a bitmap font with a basic size of 17 dots H x 17 dots W.

You can select fixed pitch or proportional pitch.

A font sample is shown in the figure below.

	2	3	4	5	6	7	8	9	A	B	C	D	E	F
0		0	@	P	'	p				ー	タ	ミ		
1	!	1	A	Q	a	q			。	ア	チ	ム		
2	"	2	B	R	b	r			「	イ	ツ	メ		
3	#	3	C	S	c	s			」	ウ	テ	モ		
4	$	4	D	T	d	t			、	エ	ト	ヤ		
5	%	5	E	U	e	u			・	オ	ナ	ユ		
6	&	6	F	V	f	v			ヲ	カ	ニ	ヨ		
7	'	7	G	W	g	w			ァ	キ	ヌ	ラ		
8	(	8	H	X	h	x			ィ	ク	ネ	リ		
9	)	9	I	Y	i	y			ゥ	ケ	ノ	ル		
A	*	:	J	Z	j	z			ェ	コ	ハ	レ		
B	+	;	K	[	k	{			ォ	サ	ヒ	ロ		
C	,	<	L	¥	l	¦			ャ	シ	フ	ワ		
D	−	=	M	]	m	}			ュ	ス	ヘ	ン		
E	.	>	N	^	n	~			ョ	セ	ホ	゛		
F	/	?	O	_	o				ッ	ソ	マ	゜		

- To select proportional pitch, enable [SBPL] > [Font Settings] > [Proportional] in the [Applications] menu, or specify with the command.

X22 Font

The X22 font is a bitmap font with a basic size of 24 dots H x 24 dots W.

You can select fixed pitch or proportional pitch.

A font sample is shown in the figure below.

	2	3	4	5	6	7	8	9	A	B	C	D	E	F
0		0	@	P	`	p				ー	タ	ミ		
1	!	1	A	Q	a	q			。	ア	チ	ム		
2	”	2	B	R	b	r			「	イ	ツ	メ		
3	#	3	C	S	c	s			」	ウ	テ	モ		
4	$	4	D	T	d	t			、	エ	ト	ヤ		
5	%	5	E	U	e	u			・	オ	ナ	ユ		
6	&	6	F	V	f	v			ヲ	カ	ニ	ヨ		
7	’	7	G	W	g	w			ァ	キ	ヌ	ラ		
8	(	8	H	X	h	x			ィ	ク	ネ	リ		
9	)	9	I	Y	i	y			ゥ	ケ	ノ	ル		
A	*	:	J	Z	j	z			ェ	コ	ハ	レ		
B	+	;	K	[	k	{			ォ	サ	ヒ	ロ		
C	,	<	L	¥	l	¦			ャ	シ	フ	ワ		
D	−	=	M	]	m	}			ュ	ス	ヘ	ン		
E	.	>	N	^	n	~			ョ	セ	ホ	゛		
F	/	?	O	_	o				ッ	ソ	マ	゜		

- To select proportional pitch, enable [SBPL] > [Font Settings] > [Proportional] in the [Applications] menu, or specify with the command.

X23 Font

The X23 font is a bitmap font with a basic size of 48 dots H x 48 dots W.

You can select fixed pitch or proportional pitch.

A font sample is shown in the figure below.

	2	3	4	5	6	7	8	9	A	B	C	D	E	F
0		0	@	P	`	p				ー	タ	ミ		
1	!	1	A	Q	a	q			。	ア	チ	ム		
2	″	2	B	R	b	r			「	イ	ツ	メ		
3	#	3	C	S	c	s			」	ウ	テ	モ		
4	$	4	D	T	d	t			、	エ	ト	ヤ		
5	%	5	E	U	e	u			・	オ	ナ	ユ		
6	&	6	F	V	f	v			ヲ	カ	ニ	ヨ		
7	′	7	G	W	g	w			ァ	キ	ヌ	ラ		
8	(	8	H	X	h	x			ィ	ク	ネ	リ		
9	)	9	I	Y	i	y			ゥ	ケ	ノ	ル		
A	*	:	J	Z	j	z			ェ	コ	ハ	レ		
B	+	;	K	[	k	{			ォ	サ	ヒ	ロ		
C	,	<	L	¥	l	¦			ャ	シ	フ	ワ		
D	−	=	M	]	m	}			ュ	ス	ヘ	ン		
E	.	>	N	^	n	~			ョ	セ	ホ	゛		
F	/	?	O	_	o				ッ	ソ	マ	゜		

- To select proportional pitch, enable [SBPL] > [Font Settings] > [Proportional] in the [Applications] menu, or specify with the command.

X24 Font

The X24 font is a bitmap font with a basic size of 48 dots H x 48 dots W.

You can select fixed pitch or proportional pitch.

A font sample is shown in the figure below.

	2	3	4	5	6	7	8	9	A	B	C	D	E	F
0		0	@	P	‘	p				ー	タ	ミ		
1	!	1	A	Q	a	q			。	ア	チ	ム		
2	″	2	B	R	b	r			「	イ	ツ	メ		
3	#	3	C	S	c	s			」	ウ	テ	モ		
4	$	4	D	T	d	t			、	エ	ト	ヤ		
5	%	5	E	U	e	u			・	オ	ナ	ユ		
6	&	6	F	V	f	v			ヲ	カ	ニ	ヨ		
7	′	7	G	W	g	w			ァ	キ	ヌ	ラ		
8	(	8	H	X	h	x			ィ	ク	ネ	リ		
9	)	9	I	Y	i	y			ゥ	ケ	ノ	ル		
A	*	:	J	Z	j	z			ェ	コ	ハ	レ		
B	+	;	K	[	k	{			ォ	サ	ヒ	ロ		
C	,	<	L	¥	l	¦			ャ	シ	フ	ワ		
D	−	=	M	]	m	}			ュ	ス	ヘ	ン		
E	.	>	N	^	n	~			ョ	セ	ホ	゛		
F	/	?	O	_	o				ッ	ソ	マ	゜		

- To select proportional pitch, enable [SBPL] > [Font Settings] > [Proportional] in the [Applications] menu, or specify with the command.

OCR-A Font

The OCR-A font is a bitmap font. The basic size varies depending on the print resolutions as follows:

Print Resolution	Basic Font Size
203 dpi (8 dots/mm)	22 dots H x 15 dots W
305 dpi (12 dots/mm)	33 dots H x 22 dots W

This supports the fixed pitch only.

The figure below is a font sample when the print resolution is 203 dpi (8 dots/mm).

OCR-B Font

The OCR-B font is a bitmap font. The basic size varies depending on the print resolutions as follows:

Print Resolution	Basic Font Size
203 dpi (8 dots/mm)	24 dots H x 20 dots W
305 dpi (12 dots/mm)	36 dots H x 30 dots W

This supports the fixed pitch only.

The figure below is a font sample when the print resolution is 203 dpi (8 dots/mm).

	2	3	4	5	6	7	8	9	A	B	C	D	E	F
0		0	@	P										
1	!	1	A	Q										
2	"	2	B	R										
3	#	3	C	S										
4	$	4	D	T										
5	%	5	E	U										
6	&	6	F	V										
7	'	7	G	W										
8	(	8	H	X										
9	)	9	I	Y										
A	*	:	J	Z										
B	+	;	K	¥										
C	,	<	L	¥										
D	-	=	M											
E	.	>	N											
F	/	?	O											

Scalable Fonts

The product contains various scalable fonts.

The figure below is a sample of some scalable fonts.

Fontname	Sample
SATOCGSleek.ttf	ABCXYZabcxyz123
SATOCGStream.ttf	ABCXYZabcxyz123
SATOOCRA.ttf	ABCXYZabcxyz123
SATO0.ttf	ABCXYZabcxyz123
SATOALPHABC.ttf	ABCXYZabcxyz123
SATOBETABI.ttf	ABCXYZabcxyz123
SATOFOLIOB.ttf	ABCXYZabcxyz123
SATOFUTURAMC.ttf	ABCXYZabcxyz123
SATOGAMMA.ttf	ABCXYZabcxyz123
SATOOCRB.ttf	ABCXYZabcxyz123
SATOSANS.ttf	ABCXYZabcxyz123
SATOSERIF.ttf	ABCXYZabcxyz123
SATOSYM.ttf	ƒ/…√∞¬ΗΘΙηθι678
SATOVICA.ttf	ABCXYZabcxyz123
SATOWING.ttf	✌☜☞✠✡☪♋♌♍☒⌂⌘🗁🗎🗏

Multilingual Font

The product contains various multilingual fonts.

The figure below is a sample of some of the multilingual fonts.

b	Fontname	Sample
0	SATO Hebe Sans	This is a fontsample.
8	SATO Silver Serif	This is a fontsample.
1	SATO Hebe Sans Arabic	هذا هو عينة من الخط.
13	SATO Roman Arabic	هذا هو عينة من الخط.
2	SATO Hebe Sans Thai	นี้คือตัวอย่างของตัวอักษร
3	SATO Hebe Sans Hindi	इस फॉन्ट का एक नमूना है.
14	SATO Hebe Sans Hebrew	.זהו דוגמא של הגופן
4	SATO Gothic Tradional Chinese	這是字體的樣本。
9	SATO Mincho Tradional Chinese	這是字體的樣本。
6	SATO Gothic Simplified Chinese	这是字体的样本。
11	SATO Mincho Simplified Chinese	这是字体的样本。
5	SATO Gothic Japanese	これはフォントのサンプルです。
10	SATO Mincho Japanese	これはフォントのサンプルです。
7	SATO Gothic Korean	이것은 글꼴의 샘플입니다.
12	SATO Mincho Korean	이것은 글꼴의 샘플입니다.

Outline Fonts

The font type, font size and font shape can be specified for the outline fonts.

For the font type, you can select fixed pitch or proportional pitch. You can also specify kanji, but kanji supports fixed pitch only.

The figure below is a sample of some font shapes. Shapes such as normal font, white characters on black background, grey font, font with shadow, mirrored font and italic font can be specified.

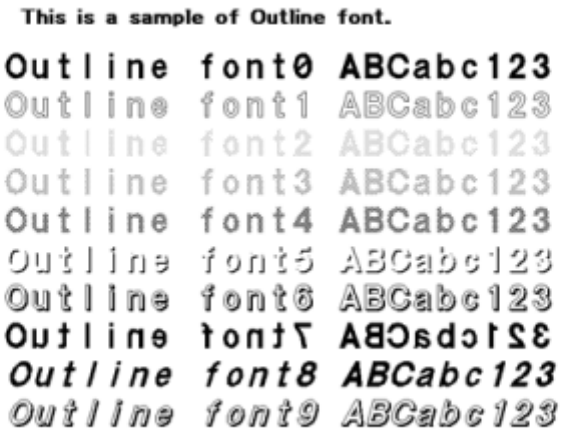

The figure below is a font sample with the standard font.

	2	3	4	5	6	7	8	9	A	B	C	D	E	F
0		0	@	P	‘	p				ー	タ	ミ		
1	!	1	A	Q	a	q			。	ア	チ	ム		
2	"	2	B	R	b	r			「	イ	ツ	メ		
3	#	3	C	S	c	s			」	ウ	テ	モ		
4	$	4	D	T	d	t			、	エ	ト	ヤ		
5	%	5	E	U	e	u			・	オ	ナ	ユ		
6	&	6	F	V	f	v			ヲ	カ	ニ	ヨ		
7	´	7	G	W	g	w			ァ	キ	ヌ	ラ		
8	(	8	H	X	h	x			ィ	ク	ネ	リ		
9	)	9	I	Y	i	y			ゥ	ケ	ノ	ル		
A	*	:	J	Z	j	z			ェ	コ	ハ	レ		
B	+	;	K	[	k	{			ォ	サ	ヒ	ロ		
C	,	<	L	¥	l	¦			ャ	シ	フ	ワ		
D	–	=	M	]	m	}			ュ	ス	ヘ	ン		
E	.	>	N	^	n	~			ョ	セ	ホ	゛		
F	/	?	O	_	o				ッ	ソ	マ	゜		

- The font size can be specified from 1 to 999 dots, but if the font size is too small for the font shape, it cannot be recognized as a font. Please be careful. Also, if the specified font size is too small, it may collapse, depending on the font.

Barcodes

Code Type	Description
Barcode	• UPC-A/UPC-E • JAN/EAN-13/8 • CODE39, CODE93, CODE128 • GS1-128(UCC/EAN128) • CODABAR(NW-7) • ITF • Industrial 2 of 5 • NEC Matrix 2 of 5 • MSI • Customer Barcode • POSTNET • UPC add-on code • BOOKLAND • USPS code • GS1 DataBar Omnidirectional • GS1 DataBar Truncated • GS1 DataBar Stacked • GS1 DataBar Stacked Omnidirectional • GS1 DataBar Limited • GS1 DataBar Expanded • GS1 DataBar Expanded Stacked
2D Codes	• QR Code • Micro QR Code • Security QR • PDF417 • Micro PDF • Maxi Code • GS1 Data Matrix • Data Matrix (ECC200) • Aztec Code
Composite Symbols	• EAN-13 Composite (CC-A/CC-B) • EAN-8 Composite (CC-A/CC-B) • UPC-A Composite (CC-A/CC-B) • UPC-E Composite (CC-A/CC-B)

Code Type	Description
	• GS1 DataBar Composite (CC-A/CC-B) • GS1 DataBar Truncated Composite (CC-A/CC-B) • GS1 DataBar Stacked Composite (CC-A/CC-B) • GS1 DataBar Expanded Stacked Composite (CC-A/CC-B) • GS1 DataBar Expanded Composite (CC-A/CC-B) • GS1 DataBar Stacked Omnidirectional Composite (CC-A/CC-B) • GS1 DataBar Limited Composite (CC-A/CC-B) • GS1-128 Composite (CC-A/CC-B/CC-C)

- Specifications are subject to change without notice.

Support and Warranty

SOS (SATO Online Services) (SOS users only)

The SOS (SATO Online Services) is a remote maintenance service that monitors your product status for 24 hours and supports its stable operation. To use this service, create an SOS account and add your product.

For details on the SOS, refer to the SOS Portal Site.

http://www.sato-sos.com/en

Maintenance Support

SATO provides maintenance support to ensure reliable operation of your product.

Access the following site and select your country from the list. Check the information on the displayed page.

http://www.satoworldwide.com/service-and-support.aspx

Warranty Period for Consumables

For information on the warranty period for print heads, platen rollers, pressure nip rollers, and nip rollers, contact your SATO sales representative or reseller.

February 2018

Version 1