Operator Manual

For printer model:

CL4NX
CL6NX

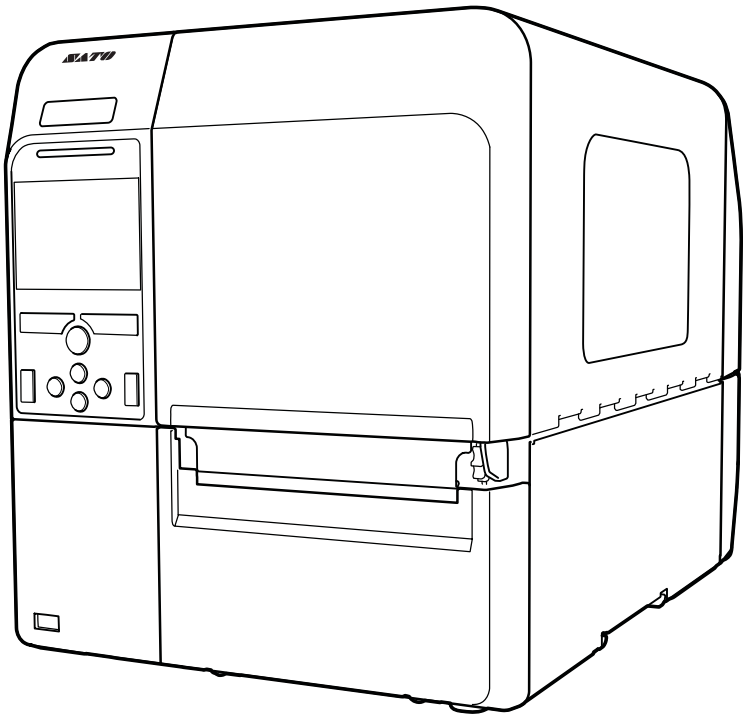

Version: GBS-CL4NX_CL6NX-r05-01-04-15OM

Table of Contents

Before You Start

Thank you for purchasing this SATO CL4NX/CL6NX printer (hereafter referred to as “the printer”). This manual supplies basic information on how to operate the printer. Read the manual carefully to understand each function before operation.

Features of the Product

This SATO CL4NX/CL6NX printer is a high-performance labeling system with a robust casing made of metal and equipped with versatile functions. The main features of the printer are as follows:

- Simple and stylish design
- High-quality printing
- Designed for better usability
- Equipped with high legibility TFT color LCD and LED
- Onboard Guidance Videos
- Print head and platen roller can be replaced without using extra tools
- Supports a 600 m ribbon
- Supports thirty languages for display and forty-seven languages for printing scalable fonts
- Supports various communication interfaces
- Supports protocols such as IPv6, SNMP and NTP
- Certified by Wi-Fi alliance

- Compatible with Cisco CCX V4.0

SATO CL4NX/CL6NX printer has tested compatible with Cisco CCX, version 4.0. The Cisco Compatible logo signifies that SATO product has undergone interoperability testing by SATO together with Cisco and a third-party test house based on testing criteria set by Cisco.
SATO is solely responsible for the support and warranty of its product. Cisco makes no warranties, express or implied, with respect to SATO product or its inter operation with the listed Cisco product(s) and disclaims any implied warranties of merchantability, fitness for a particular use, or against infringement.

- Conforms to international ENERGY STAR program

The products described herein comply with the requirements of the ENERGY STAR. As an ENERGY STAR Partner, SATO Corporation has determined that this product meets the ENERGY STAR guidelines for energy efficiency. For more information about the ENERGY STAR program, see www.energystar.gov.

Safety Precautions

This section describes how to safely operate the printer. Be sure to read and understand all instructions carefully before you install and use the printer.

Pictographic Symbols
This operator manual and printer labels use a variety of pictographic symbols. These symbols show the safe and correct operation of the printer and how to prevent injury to others and property damage. The symbol explanations are as follows.

Warning	The Warning symbol indicates that you can cause death or serious injury if you do not follow the instruction or procedure.

Caution	The Caution symbol indicates that you can cause injury or property damage if you do not follow the instruction or procedure.

Example Pictographs

The △ pictograph means “Caution is required”. The pictograph includes a specified warning symbol (for example, the left symbol shows electric shock).

The ⃠ pictograph means “Must not be done”. The pictograph includes a specified prohibited symbol (for example, the left symbol means “Disassembly prohibited”).

The ● pictograph means “Must be done”. The pictograph includes a specified mandate action symbol (for example, the left symbol means “Disconnect the power plug from the outlet”).

⚠ Warning

Place the printer on a stable area.

- Place the printer on a stable area. Do not place the printer on an unstable table, slanted surface or an area subject to strong vibration. If the printer falls off or topples, it could cause injury to someone.

Do not place containers filled with liquid on the printer.

- Do not place flower vases, cups, or other containers filled with liquids, on the printer. If any liquid spills into the printer, immediately power off the printer and disconnect the power plug from the outlet. Then contact your SATO reseller or technical support center. If you operate the printer in this condition, it could cause a fire or electric shock.

Do not place objects into the printer.

- Do not place metal or flammable objects inside the printer’s opening. If a foreign object gets into the printer, immediately power off the printer and disconnect the power plug from the outlet. Then contact your SATO reseller or technical support center. If you operate the printer in this condition, it could cause a fire or electric shock.

Do not use other than the specified voltage.

- Do not use other than the specified voltage. Doing so could cause a fire or electric shock.

⚠ Warning

Always ground connections.

- Always connect the printer's ground wire to a ground. Not grounding the ground wire could cause an electric shock.

Handling the power cord

- Do not break or change the power cord. Do not place heavy objects on the power cord, heat it, or pull it. Doing so could cause damage to the power cord and cause a fire or electric shock.
- If the power cord becomes damaged (core is exposed, wires broken, etc.), contact your SATO reseller or technical support center. Using the power cord in this condition could cause a fire or electric shock.
- Do not change, overly bend, twist, or pull the power cord. Using the power cord in such a way could cause a fire or electric shock.

When the printer has been dropped or broken

- If the printer is dropped or broken, immediately power off the printer and disconnect the power plug from the outlet. Contact your SATO reseller or technical support center. Using the printer in this condition could cause a fire or electric shock.

Do not use the printer when something is unusual about it.

- Continuing to use the printer in the event something is unusual about it, such as smoke or unusual smells coming from it, could cause a fire or electric shock. Immediately power off the printer and disconnect the power plug from the outlet. Then contact your SATO reseller or technical support center for repairs. Under no circumstances should you attempt repairs on your own; it is too dangerous.

Do not disassemble the printer.

- Do not disassemble or modify the printer. Doing so could cause a fire or electric shock. Contact your SATO reseller or technical support center to perform internal inspections, adjustments, and repairs.

Regarding the cutter

- Do not touch the cutter with your hands, nor place objects into the cutter. Doing so could cause an injury.

Using the head cleaning fluid

- Use of flame or heat around the head cleaning fluid is prohibited. Do not heat it or subject it to flames.
- Keep the fluid out of reach of children. If a child accidentally drinks the fluid, immediately consult with a physician.

Print head

- The print head will become hot after printing. Be careful not to touch it when replacing media or cleaning immediately after printing, to avoid being burned.
- Touching the edge of the print head immediately after printing could cause an injury. Use caution when replacing the media or cleaning the print head.
- Never replace the print head if you have not received the correct training.

⚠ Caution

Do not use in areas of high humidity.

- Do not use the printer in areas of high humidity or where condensation forms. If condensation forms, immediately power off the printer and do not use the printer until it dries. Using the printer while condensation is on it could cause an electric shock.

Carrying the printer

- When moving the printer, always disconnect the power cord from the outlet and check to make sure that all external wires are disconnected before moving it. Moving the printer with the wires still connected could cause damage to the cords or connecting wires, resulting in a fire or electric shock.
- Do not carry the printer while it contains media. The media could fall out and cause an injury.
- When setting the printer on the floor or a stand, be sure not to get your fingers or hands pinched under the printer feet.

Power supply

- If your hands are wet, do not operate the power button, connect the power cord or disconnect the power cord. Doing so could cause an electric shock.

Power cord

- Keep the power cord away from hot devices. Placing the power cord near hot devices could cause the cord's covering to melt and cause a fire or electric shock.
- When disconnecting the power cord from the outlet, be sure to hold the plug. Pulling the cord could expose or break the wires and cause a fire or electric shock.
- The power cord set that comes with the printer is designed especially for this printer. Do not use it with any other electrical devices.

Top cover

- Be careful not to get your fingers pinched when opening or closing the top cover. Also, be careful that the top cover does not slip off and drop.

Loading media

- When loading a media roll, be careful not to get your fingers pinched between the media roll and the supply unit.

When not using the printer for a long time

- When not using the printer for a long time, disconnect the power cord from the outlet to maintain safety.

During maintenance and cleaning

- When maintaining and cleaning the printer, disconnect the power cord from the outlet to maintain safety.

Precautions for Installation and Handling

Printer operation can be affected by the printer environment.
Refer to the following instructions for installation and handling of the CL4NX/CL6NX printer.

Select a Safe Location

Place the printer on a surface that is flat and level.

If the surface is not flat and level, this may cause bad print quality. This may also cause a malfunction and decrease the life span of the printer.

Do not place the printer on a location that produces vibration.

Giving serious vibration or shock to the printer may cause a malfunction and shorten the life span of the printer.

Keep the printer out of high temperature and humidity.

Avoid locations subject to extreme or fast changes in temperature or humidity.

Do not place the printer in a location subject to water or oil.

Do not place the printer in a location where it will be exposed to water or oil. Water or oil entering inside the printer may cause a fire, electric shock or malfunction.

Avoid dust.

Dust build up may result in bad print quality.

Keep out of direct sunlight.

This printer has a built-in optical sensor. Exposure to direct sunlight will make the sensor less responsive and may cause the media to be sensed incorrectly. Close the top cover when printing.

Power Supply

This printer requires an AC power supply.

Be sure to connect the printer to an AC power supply.

Connect the power cord to a grounded power outlet.

Make sure that the printer is connected to a grounded power outlet.

Supply a stable source of electricity to the printer.

When using the printer, do not share its power outlet with other electrical devices that could cause power fluctuations and performance issues with your printer.

Regulatory Approval

FCC Warning

You are cautioned that changes or modifications not expressly approved by the party responsible for compliance could void your authority to operate the equipment.

This device complies with Part 15 of the FCC Rules. Operation is subject to the following two conditions: (1) this device may not cause harmful interference, and (2) this device must accept any interference received, including interference that may cause undesired operation.

This equipment has been tested and found to comply with the limits for a Class B digital device, pursuant to Part 15 of the FCC Rules. These limits are designed to provide reasonable protection against harmful interference in a residential installation. This equipment generates, uses and can radiate radio frequency energy and, if not installed and used in accordance with the instructions, may cause harmful interference to radio communications.

However, there is no guarantee that interference will not occur in a particular installation.

If this equipment does cause harmful interference to radio or television reception, which can be determined by turning the equipment off and on, the user is encouraged to try to correct the interference by one or more of the following measures:

- Reorient or relocate the receiving antenna.
- Increase the separation between the equipment and the receiver.
- Connect the equipment into an outlet on a circuit different from that to which the receiver is connected.
- Consult the dealer or an experienced radio/TV technician for help.

Shielded cable must be used in order to comply with the emission limits.

FCC Statement for Optional Wireless LAN

This device complies with RF radiation exposure limits set forth for an uncontrolled environment.

The antenna used for this transmitter must be installed to provide a separation distance of at least 20 cm from all people and must not be collocated or operating in conjunction with any other antenna or transmitter.

Bluetooth/Wireless Communication

Compliance Statement
This product has been certified for compliance with the relevant radio interference regulations of your country or region. To make sure continued compliance, do not:

- Disassemble or modify this product.
- Remove the certificate label (serial number seal) affixed to this product.

Use of this product near microwave and/or other wireless LAN equipment, or where static electricity or radio interference is present, may shorten the communication distance, or even disable communication.

Industry Canada (IC) Statement for Bluetooth

This device complies with Industry Canada license-exempt RSS standard(s). Operation is subject to the following two conditions:

- This device may not cause interference.
- This device must accept any interference, including interference that may cause undesired operation of the device.

This equipment complies with IC radiation exposure limits set forth for an uncontrolled environment and meets RSS-102 of the IC radio frequency (RF) Exposure rules. This equipment should be installed and operated keeping the radiator at least 20 cm or more away from person's body (excluding extremities: hands, wrists, feet and ankles).

Le présent appareil est conforme aux CNR d'Industrie Canada applicables aux appareils radio exempts de licence. L'exploitation est autorisée aux deux conditions suivantes :

- L'appareil ne doit pas produire de brouillage.
- L'utilisateur de l'appareil doit accepter tout brouillage radioélectrique subi, même si le brouillage est susceptible d'en compromettre le fonctionnement.

Cet équipement est conforme aux limites d'exposition aux rayonnements énoncées pour un environnement non contrôlé et respecte les règles d'exposition aux fréquences radioélectriques (RF) CNR-102 de l'IC. Cet équipement doit être installé et utilisé en gardant une distance de 20 cm ou plus entre le dispositif rayonnant et le corps (à l'exception des extrémités : mains, poignets, pieds et chevilles).

Disposal of Old Electrical & Electronic Equipment (Applicable in the European Union and other European countries with separate collection systems)

A product marked with this symbol on itself or on its packaging shall not be treated as household waste. Instead, it shall be handed over to an appropriate collection point for the recycling of electrical and electronic equipment in accordance with local regulations. Inappropriate waste handling of this product may cause detrimental consequences for the environment and damage to human health. The recycling of materials will help to conserve natural resources and contribute to your community. For more detailed information on recycling of this product, contact your local municipal organization, your household waste disposal service or the dealer where you purchased the product.

EN55022 Warning

This is a class A product.

In a domestic environment, this product may cause radio interference, in which case the user may be required to take adequate measures.

EN55022 Warnung

Warnung! Dies ist eine Einrichtung der Klasse A.

Diese Einrichtung kann im Wohnbereich Funkstörungen verursachen. In diesem Fall kann vom Betreiber verlangt werden, angemessene Maßnahmen durchzuführen.

Das Gerät ist nicht für die Benutzung im unmittelbaren Gesichtsfeld am Bildschirmarbeitsplatz vorgesehen. Um störende Reflexionen am Bildschirmarbeitsplatz zu vermeiden, darf dieses Produkt nicht im unmittelbaren Gesichtsfeld platziert werden.

机器名称:条码打印机

部件名称	有毒有害物质或元素					
	铅 (Pb)	汞 (Hg)	镉 (Cd)	六价铬 (Cr6+)	多溴联苯 (PBB)	多溴二苯醚 (PBDE)
印刷电路板	×	○	○	○	○	○
电源、交流转换器电池	×	○	○	○	○	○
热敏头、液晶显示屏	×	○	○	○	○	○
电动机、切纸机	×	○	○	○	○	○
树脂(ABS、PC等)	×	○	○	○	○	○
金属(铁、非铁金属)	×	○	○	○	○	○
电缆等	○	○	○	○	○	×
包装材料(纸盒等)	○	○	○	○	○	○

○：表示该有毒有害物质在该部件所有均质材料中的含量均在SJ/T11363-2006 “电子信息产品中有毒有害物质的限量要求”的标准规定以下。

×：表示该有毒有害物质至少在该部件的某一均质材料中的含量超出SJ/T11363-2006“电子信息产品中有毒有害物质的限量要求”的标准规定。

环保使用期限

本标志中的年数，是根据2006年2月28日公布的“电子信息产品污染防止管理办法”和SJ/T11364-2006“产品污染防止标识要求”，适用于在中华人民共和国（除台湾、香港和澳门外）生产或进口的电子信息产品的“环保使用期限”。在遵守使用说明书中记载的有关本产品安全和使用上的注意事项、且没有其他法律和规定的免责事由的情况下，在从生产日开始的上述年限内，产品的有毒、有害物质或元素不会发生外泄或突变，使用该产品不会对环境造成严重污染或对使用者人身、财产造成严重损害。

注1): “环保使用期限”不是安全使用期限。尤其不同于基于电气性能安全、电磁安全等因素而被限定的使用期限。产品在经适当使同后予以废弃时, 希望依照有关电子信息产品的回收和再利用的法律与规定进行处理。

注2): 本标志中的年数为“环保使用期限”，不是产品的质量保证期限。对于同一包装内包含电池、充电器等附属品的产品，产品和附属品的环保使用期限可能不同。

1 Parts Identification

1.1 Parts Identification of the Printer

1.1.1 Front View

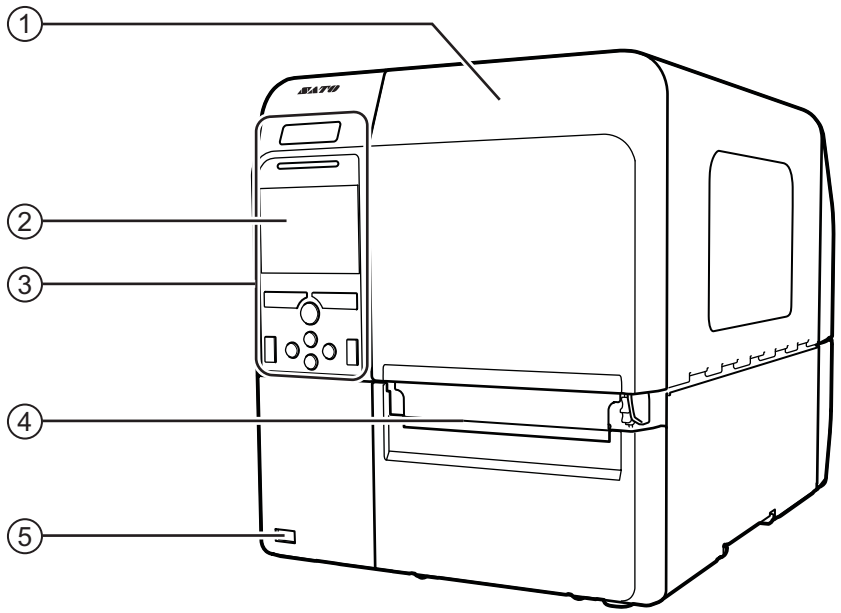

① **Top cover**

② **Color LCD**

③ **Operator panel**

④ **Media discharge outlet**

⑤ **USB connector (Type A)**
Enable the storage of printer setting information with USB memory.

Note
The pictures in this manual show the CL4NX unless otherwise stated.

1.1.2 Rear View

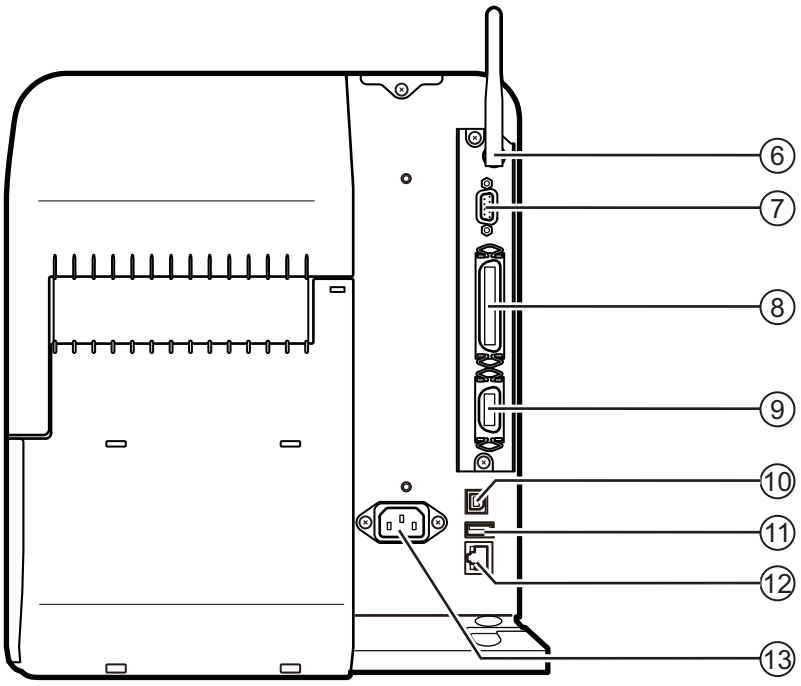

⑥ **Wireless LAN (optional) antenna**
To install the optional wireless LAN antenna.

⑦ **RS-232C connector**
To connect the printer to the host computer using the RS-232C serial interface.

⑧ **IEEE1284 connector**
To connect the printer to the host computer using the IEEE1284 interface.

⑨ **EXT connector (External signal interface)**
Interface connector for external signals. Connect the optional applicator to this terminal.

⑩ **USB connector (Type B)**
To connect the printer to the host computer using the USB interface.

⑪ **USB connector (Type A)**
For connecting to optional USB memory.

⑫ **LAN connector**
To connect printer to the host computer using the LAN interface.

⑬ **AC input terminal**
Supplies power to the printer through the inserted power cord.

Before connecting, make sure that the AC voltage of your region is in the range of AC 100 to 240 V, 50 to 60 Hz.

1.1.3 Internal View

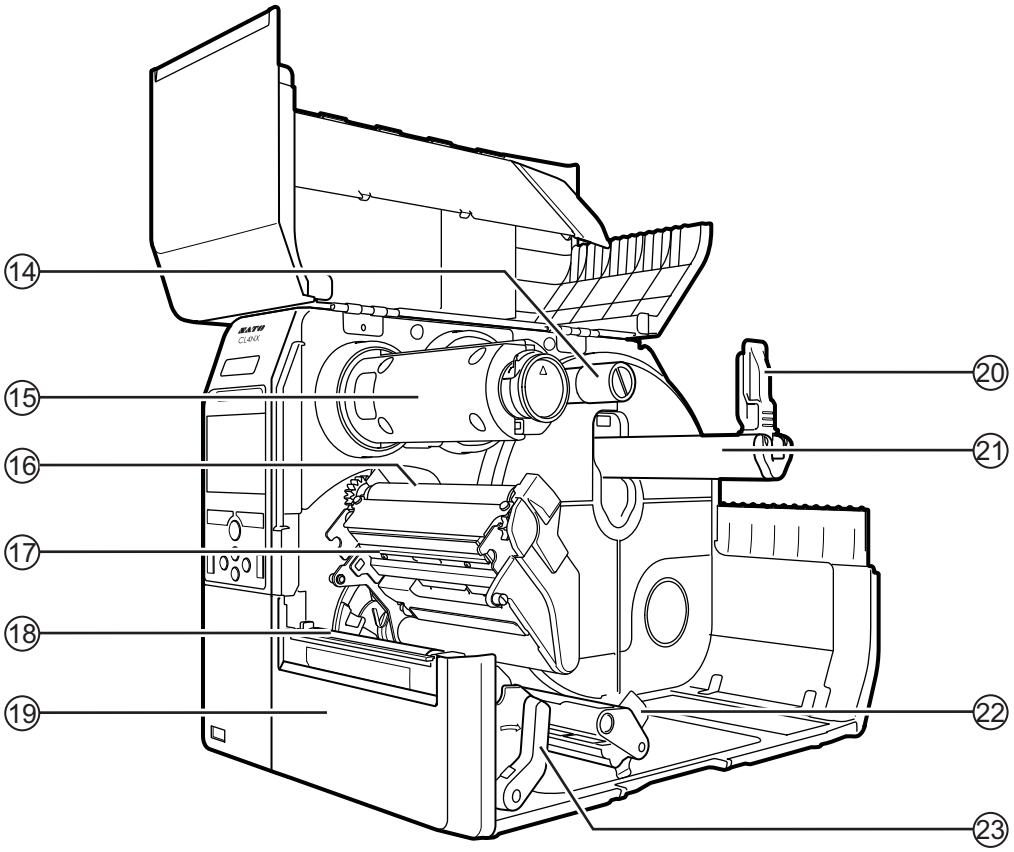

⑭ **Ribbon supply spindle**

⑮ **Ribbon rewind spindle**

⑯ **Ribbon roller**

⑰ **Print head (Consumables)**
The part to print on the media. Perform regular maintenance.

⑱ **Platen roller (Consumables)**

⑲ **Front cover**

⑳ **Media holder guide**

㉑ **Media roll holder**
Used to hold the media roll.

㉒ **Media guide**

㉓ **Head lock lever**
Used to release the print head assembly.

1.2 Parts on the Operator Panel

1.2.1 Operator Panel

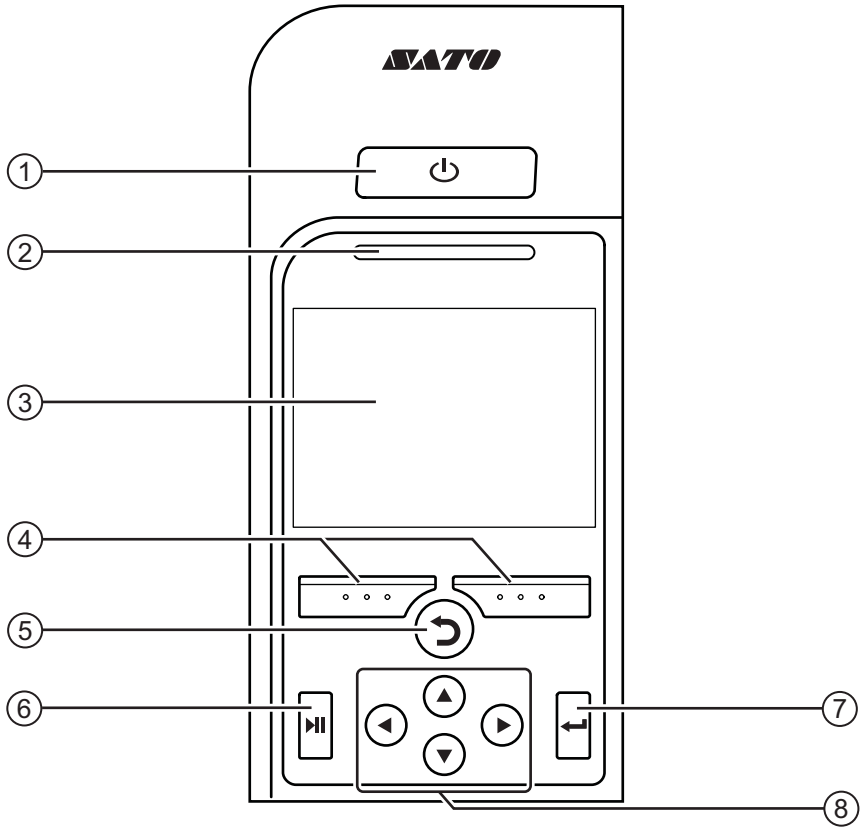

① **⏻ Power button**

Press the ⏻ power button for more than one second to power on the printer.

Press the ⏻ power button for more than two seconds to power off the printer.

② **LED indicator**

③ **Color LCD**

④ **Soft buttons**

The functions change depending on the screen. The functions of the buttons are indicated on the bottom of the screen.

(For example, when in offline mode, left soft button: ONLINE; right soft button: FEED)

⑤ **↩ Back button**

Returns to the previous screen.

⑥ **⏯ Line button**

Toggle between online/offline mode or playback/pause the video.

⑦ **↵ Enter button**

Confirm the selected item or setting value.

⑧ **◀/▶/▲/▼ Arrow buttons**

Navigate the selection in the screen menu.

1.2.2 LED Indicator

LED Indicator	Color	Description
	Blue	Online mode
	(Light off)	Power off or offline mode
	Red	Printer error (For example, when the ribbon runs out)
Flashes at intervals of two seconds.	Blue	Sleep mode

Note

If the printer enters sleep mode during a printer error status (LED lights red), the LED indicator will flash blue at intervals of two seconds.

This page is intentionally left blank.

2 Installing the Printer

2.1 Installation Precautions

Install this printer in a location as follows:

- A location that is horizontal and stable.
- A location that has sufficient space for operating the printer.

Do not install this printer in a location as follows. Doing so could cause the printer to malfunction.

- A location that is subject to vibration.
- A location with high temperature and humidity.
- A dusty location.
- A location exposed to direct sunlight.
- A location with a lot of electrical noise.
- A location with a large fluctuation in power.

2.2 Installation Space

For easy operation and correct airflow, make sure that there is sufficient space around the printer.

2.2.1 Front View (CL4NX)

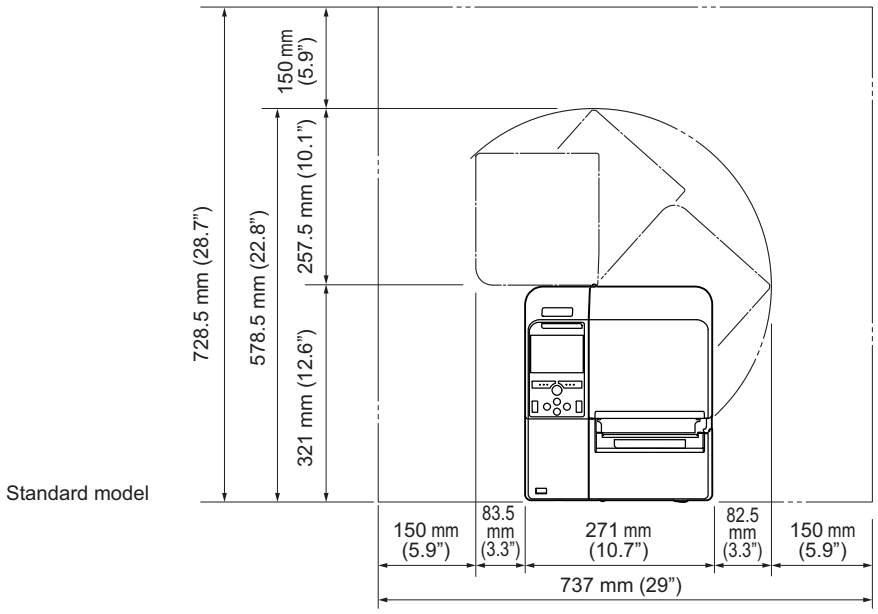

2.2.2 Front View (CL6NX)

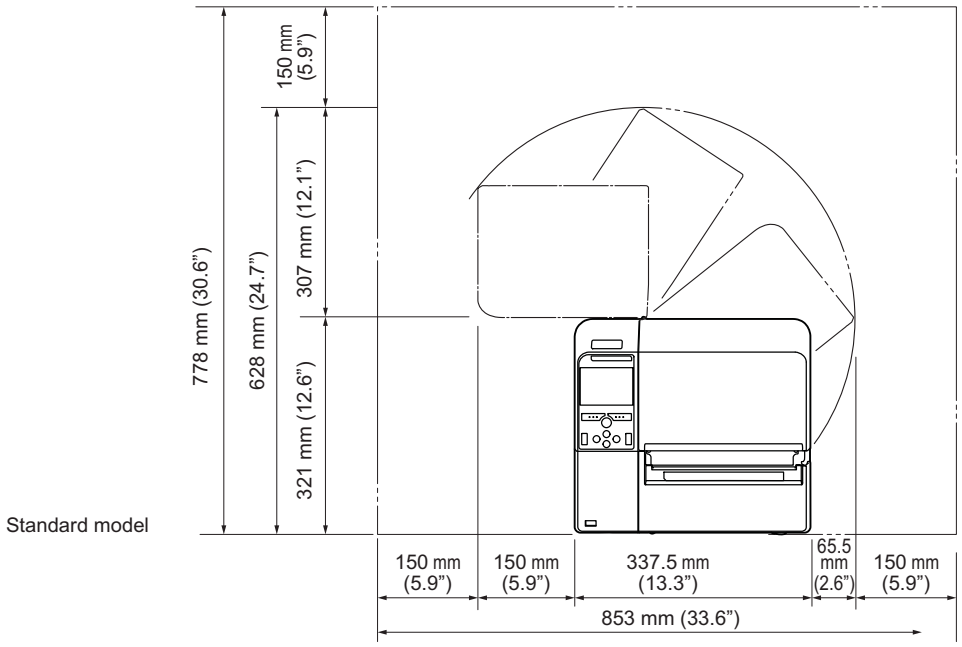

2.2.3 Side View

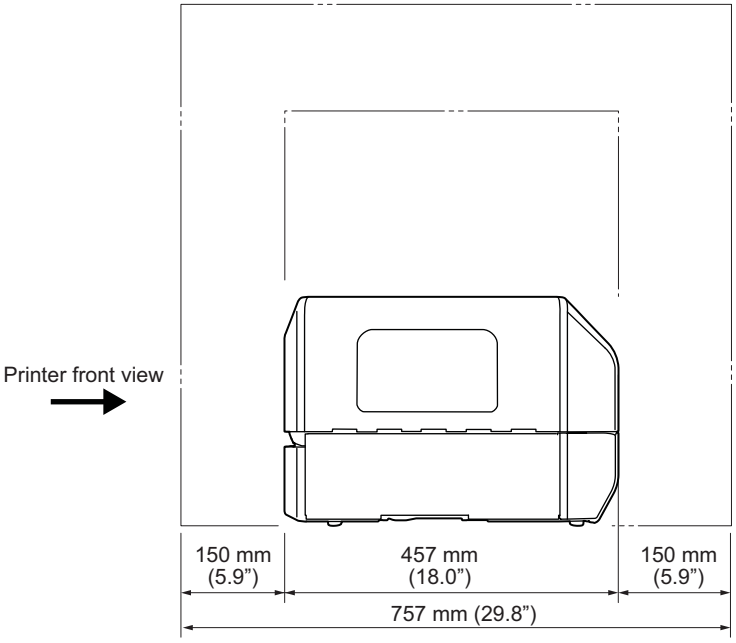

2.3 Checking the Bundled Accessories

After unpacking the printer, make sure that you have all the bundled accessories: if there are any missing items, contact the SATO reseller where you purchased the printer.

User documents
(Quick guide, Warranty, etc.)

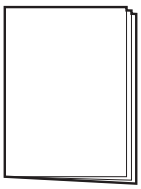

AC power cord*

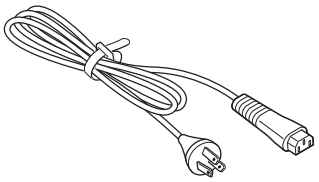

* The shape of power plug varies depending on the region in which it was purchased.

Note

Keep the packaging box and cushioning material after installing the printer. You can pack the printer with this packaging box for shipment when requesting for repairs.

2.4 Connecting the Interface Cable

The connection of the interface cable is explained as follows:

2.4.1 Available Interfaces

This printer supports the following interfaces.
Furthermore, a printer connected with multiple interface cables can continue to operate when receiving data.
*You cannot receive data from more than one interface at a time.

- USB
- LAN
- Bluetooth
- RS-232C
- IEEE1284
- External signal (EXT)
- Wireless LAN

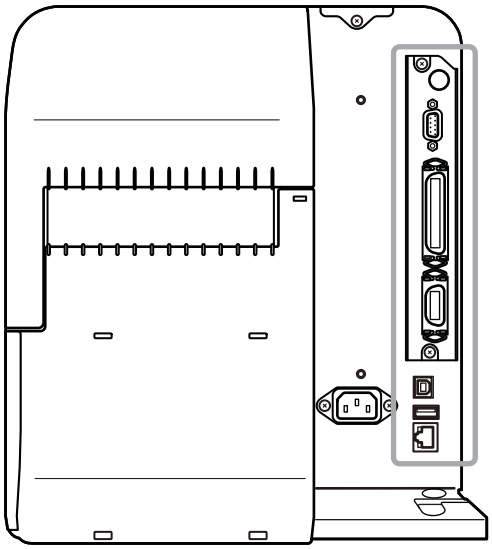

Note

The wireless LAN interface is optional.

⚠ CAUTION

Do not connect or disconnect the interface cables (or use a switch box) with power supplied to either the printer or computer. This may cause damage to the interface circuitry in the printer or computer and is not covered by warranty.

2.4.2 Interface Settings

You can set the various interface settings of the printer through **Interface** in the **Settings** menu. For details, refer to **Interface** in chapter **4 Operation and Configuration**.

2.5 Connecting the Power Cord

⚠ WARNING

- Do not touch the power button, connect or disconnect the power cord while your hands are wet. Doing so could cause an electric shock.
- Always connect the ground wire to a ground terminal. Electric shock could occur if you do not.

Note

- The attached power cord is designed exclusively for this printer.
- Do not use the attached power cord with other devices.

1 Connect the power cord to the **AC input terminal** ① at the rear of the printer.

Take note of the orientation of the connector. Secure the printer with one hand, and insert the connector tightly.

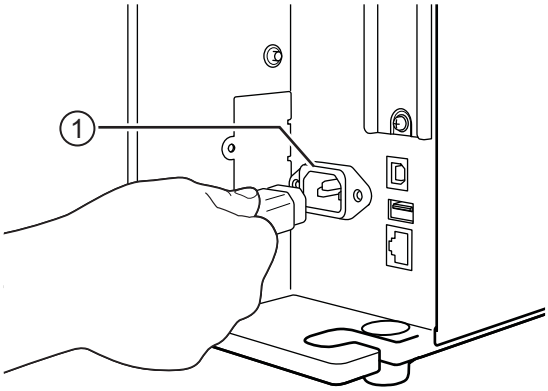

2 Insert the power plug into an AC outlet.

Make sure that the AC voltage of your region is in the range of AC 100 - 240 V, 50 - 60 Hz. If your local voltage is not in the stated range, contact your SATO reseller or technical support center.

*The shape of the power plug varies depending on the region in which it was purchased.

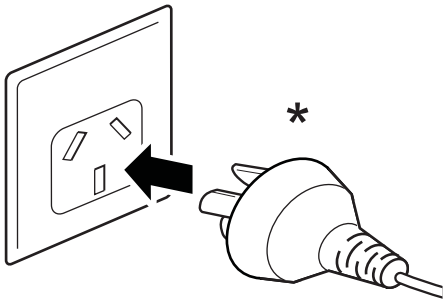

Note

This product is also designed for IT power distribution system with phase-to-phase voltage 230 V.

2.6 Power On/Off the Printer

⚠ WARNING

Do not touch the power button, connect or disconnect the power cord while your hands are wet. Doing so could cause an electric shock.

2.6.1 Power On the Printer

1 Press the ⏻ power button on the operator panel for more than one second to power on the printer.

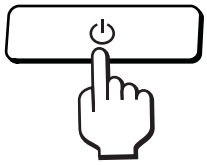

2 **Online** shows on the screen and the LED lights blue.

2.6.2 Power Off the Printer

1 Make sure that the printer is in offline mode before you power off.

If **Online** shows on the screen, press the ▶II button to change to offline mode.

2 Press the ⏻ power button for more than two seconds to power off the printer.

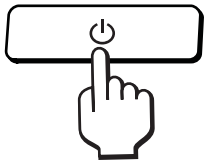

2.7 Starting Up the Printer (Startup Guide)

When you power on the printer for the first time after purchase, the display shows the startup guide. The startup guide is a function to help you through the initial printer configuration, such as setting date and time, and loading the ribbon and media.
You can cancel the startup guide and perform the configuration later from the menu.
*If you have installed the optional RTC (Real Time Clock) kit, the time zone, date and time setting screens show.

2.7.1 Startup Screen

The startup screen shows when you first power on the printer.

2.7.2 Language Selection

Select the display language.
Select the language name using the ▲/▼ buttons, then press the right soft button or ↵ button to confirm.

2.7.3 Region Setting with Optional RTC

Set the region (time zone).
Select the region using the ▲/▼ buttons, then press the right soft button or ↵ button to confirm.

2.7.4 City Setting with Optional RTC

Set the city (time zone).
Select the city using the ▲/▼ buttons, then press the right soft button or ↵ button to confirm.

2.7.5 Date Setting with Optional RTC

Set the date.
Select the current value using the ▲/▼ buttons, and move the cursor using the ◀/▶ buttons.
When you have completed the date setting, press the right soft button or ↵ button to confirm.

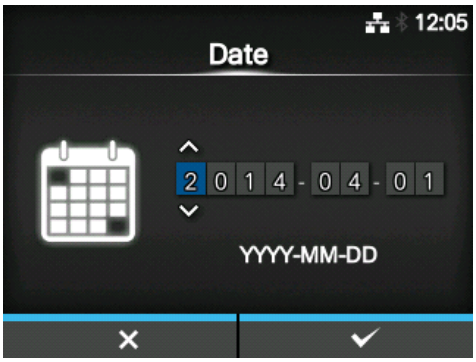

2.7.6 Time Setting with Optional RTC

Set the time.
Select the current value using the ▲/▼ buttons, and move the cursor using the ◀/▶ buttons.
When you have completed the time setting, press the right soft button or ↵ button to confirm.

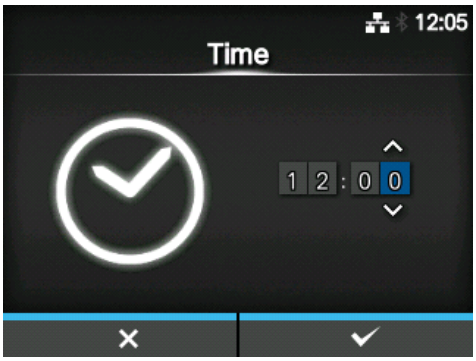

Note

The time is set in 24-hour format.

2.7.7 Print Method Setting

Set whether to use the ribbon or direct thermal media to print.
The options are as follows:

- **Use Ribbon**: Print with a ribbon.
- **Direct Thermal**: Print using direct thermal media.

Select the print method using the ▲/▼ buttons, then press the right soft button or ↵ button to confirm.

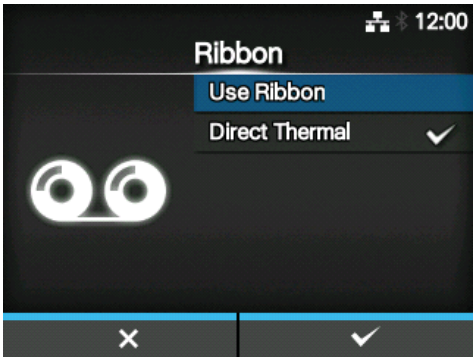

2.7.8 Ribbon Setting

Load the ribbon.
*Shows if you have selected **Use Ribbon** in the print method setting.

You can check the setting method of the ribbon through the video. Press the ↵ button to watch the video.

Press the ↩ button to stop the video and return to the previous screen.

After you complete the ribbon setting, press the right soft button to go to the next screen.

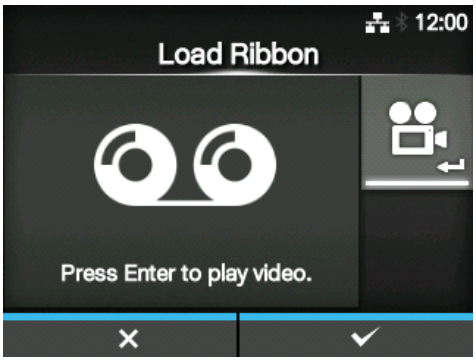

2.7.9 Setting the Media Sensor Type

Set the type of sensor for sensing the media.
The options are as follows:

- **None**: Disable the media sensor.
- **Gap**: Use the transmissive type sensor.
- **I-Mark**: Use the reflective type sensor.

Select the media sensor type using the ▲/▼ buttons, then press the right soft button or ↵ button to confirm.

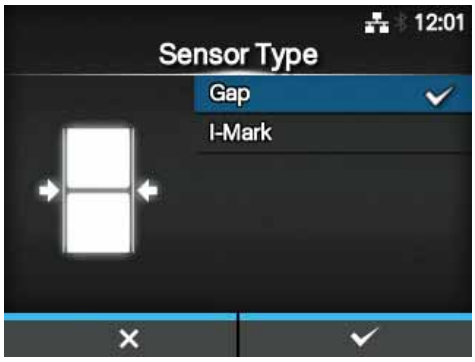

2.7.10 Media Setting

Load the media.

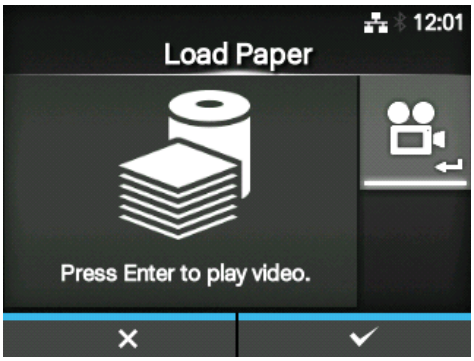

You can check the setting method of the media through the video.
Press the ↵ button to select video mode.

Note (for CL4NX only)

When you are using the linerless model, the video is shown immediately after the ↵ button is pressed.

The selection screen of the video for playback shows. (Not available for linerless model of CL4NX.)
Select the video to playback using the ▲/▼ buttons, then press the right soft button or ↵ button to playback the video.

The options are as follows:
The options vary depending on the printer model.

Standard Model and Cutter Model

- **Roll**: Shows the video on how to load the media roll.
- **Fanfold**: Shows the video on how to load the fan-fold media.

Dispenser Model

- **Dispenser**: Shows the video on how to eject the liner out of the printer.
- **Rewinder**: Shows the video on how to rewind the liner in the printer.

Press the ↩ button to stop the video and return to the previous screen.

After you complete the media setting, press the right soft button to go to the next screen.

2.7.11 Confirmation Screen

This screen shows when the startup guide completes.
If you want the startup guide to show the next time you start up, press the left soft button. If not, press the right soft button.

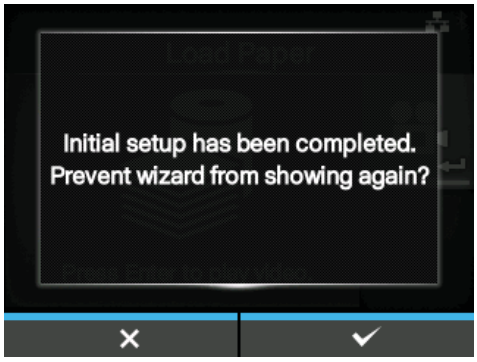

When you press one of the soft buttons, the printer automatically feeds the media (to the print head position) and enters online mode.

Note

You can enable or disable the startup guide in **Startup Guide** under the **Tools** menu.

2.7.12 Startup Guide Cancelation

You can cancel the startup guide at any time.
When you press the left soft button on the setting screen, the screen to the right shows.
Select whether or not to show the startup guide during the next startup and press the right soft button to confirm.
To cancel and return to the startup guide setting, press the left soft button.

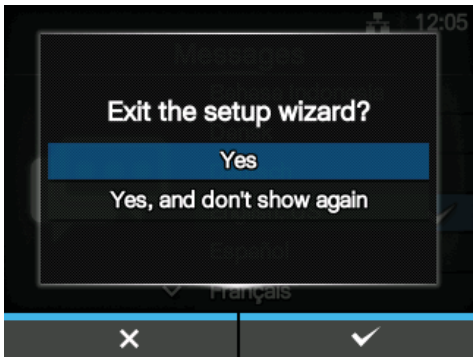

Note

- You can enable or disable the startup guide in **Startup Guide** under the **Tools** menu.
- Even if you cancel the startup guide during play, the printer will save the settings you have changed.

This page is intentionally left blank.

3 Loading the Ribbon and Media

This printer supports two types of print methods, namely thermal transfer and direct thermal. Thermal transfer is a print method that transfers the ink of the ribbon to the media using the heat of the print head. Direct thermal is a print method that creates the image on direct thermal media using the heat of the print head. Ribbon is not necessary if you are using direct thermal media.

3.1 Checking the Ink Side of the Ribbon

There are two wind directions for the ribbon. Face-out means the ink is on the outer side and Face-in means the ink is on the inner side. This printer supports both wind directions. You can examine the ink side of the ribbon using the following procedure:

1. Place the outer side of the ribbon onto the media (touching).
2. Scratch the inner side of the ribbon with your fingernail or a pointed object.
3. If there is a mark on the media, the ink is coated on the outer side of the ribbon.

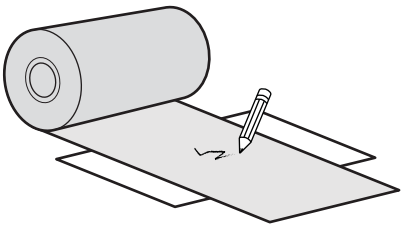

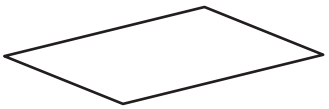

The ink is coated on the inner side. (Face-in ribbon)

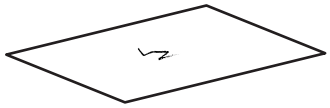

The ink is coated on the outer side. (Face-out ribbon)

3.2 Loading the Ribbon

Use genuine media and ribbons for the printer, for optimum print quality.

⚠ CAUTION

- The print head and its surroundings are hot after printing. Be careful not to touch it, to avoid being burned.
- Touching the edge of the print head with your bare hand could cause injury.

The routing path of the ribbon is shown in the right picture.

Face-in ribbon

Face-out ribbon

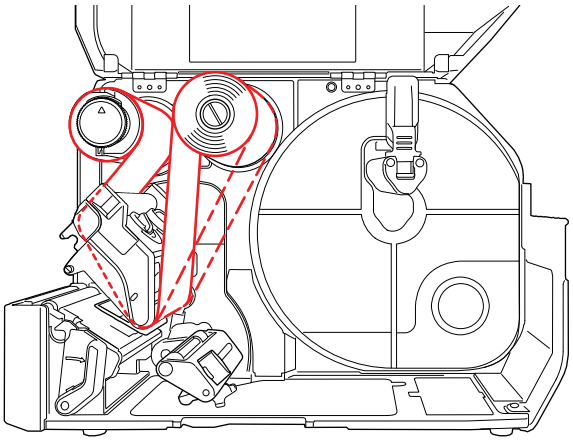

Note

You can also refer to the sticker located on the inner side of the top cover.

1 Open the **top cover** ①.

⚠ CAUTION

Open the top cover fully to prevent accidental drop of the cover.

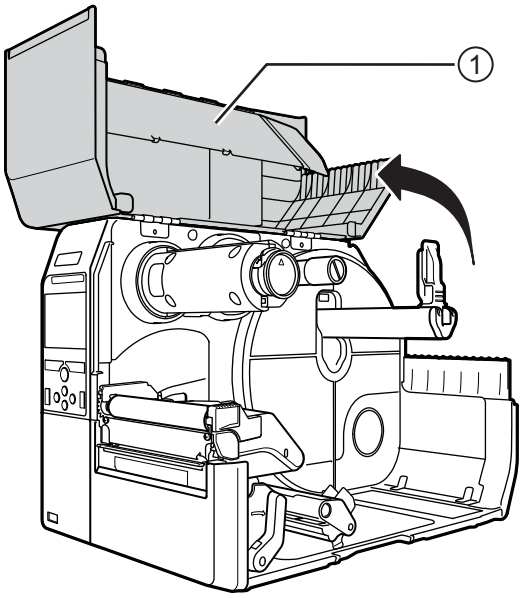

2 Push the **ribbon rewind spindle** ② all the way in.

If there is any ribbon on the ribbon rewind spindle, remove it.

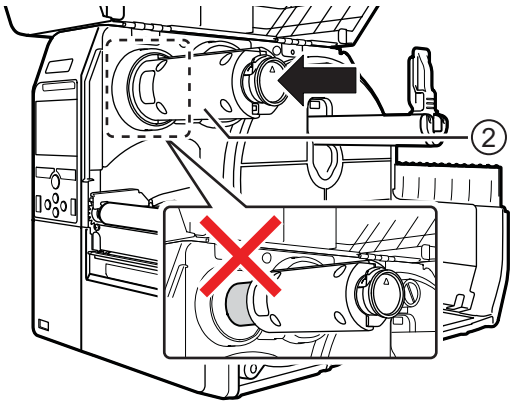

3 Push the **head lock lever** ③ towards the rear.

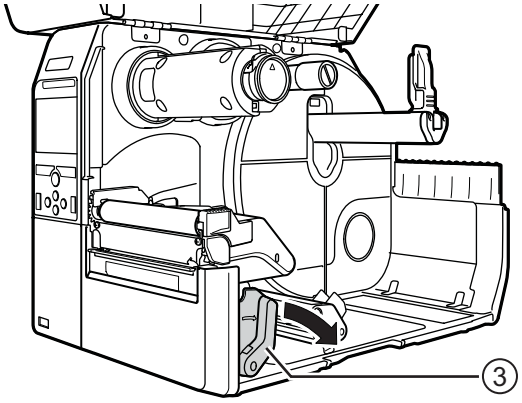

4 Load the **ribbon** ④ onto the **ribbon supply spindle** ⑤.

While taking note of the wind direction, insert the ribbon all the way in.

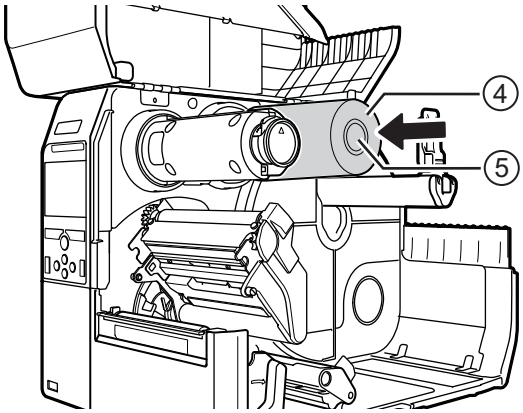

5 From the **ribbon supply spindle** ⑤, pass the ribbon below the **print head** ⑥.

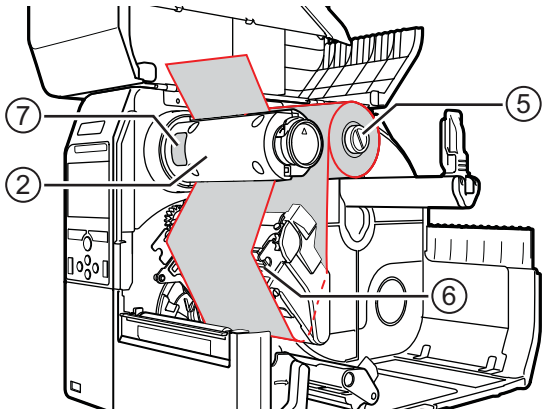

6 Wind the ribbon counterclockwise to the **ribbon rewind spindle** ② and **grip sheet** ⑦.

Turn the ribbon rewind spindle counterclockwise for several rounds, to wind the ribbon.

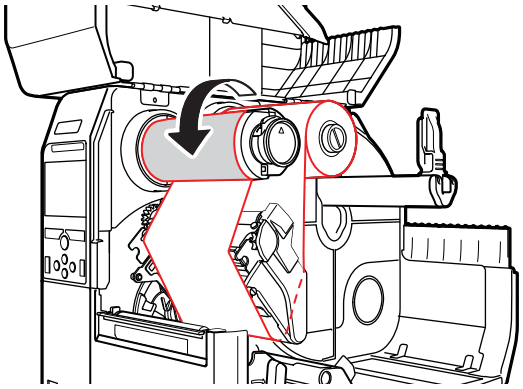

7 If the media is already loaded, press the **print head** down until the **head lock lever** is locked.

If the media is not loaded, continue with **Section 3.5 Loading Media**.

8 Close the **top cover**.

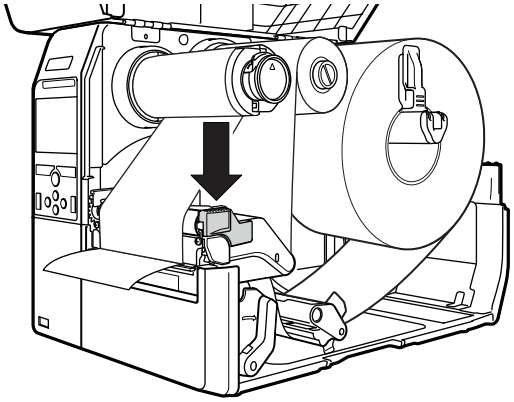

3.3 Removing the Ribbon

1 Press the **tab** ① on the tip of the **ribbon rewind spindle** to pull it out.

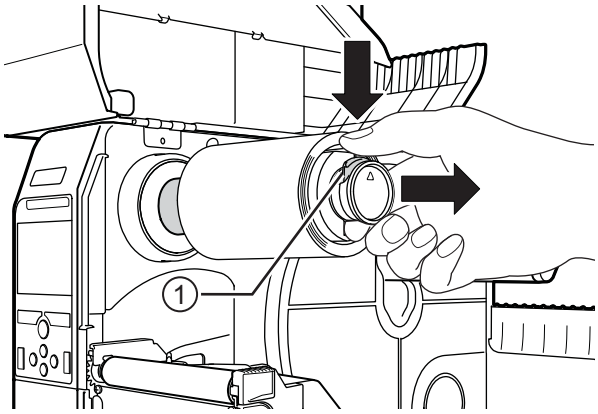

2 Pull to remove the used ribbon from the **ribbon rewind spindle**.

3 Push the **ribbon rewind spindle** all the way in.

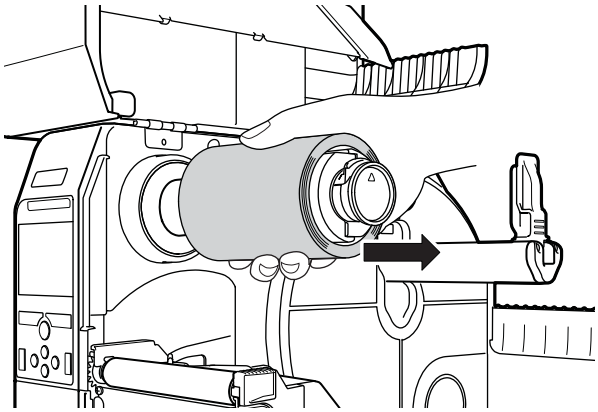

3.4 Usable Media

This printer can print on two types of media; media roll and fan-fold media. The printer uses sensors to detect I-marks or Gaps on the media in order to precisely print the content.

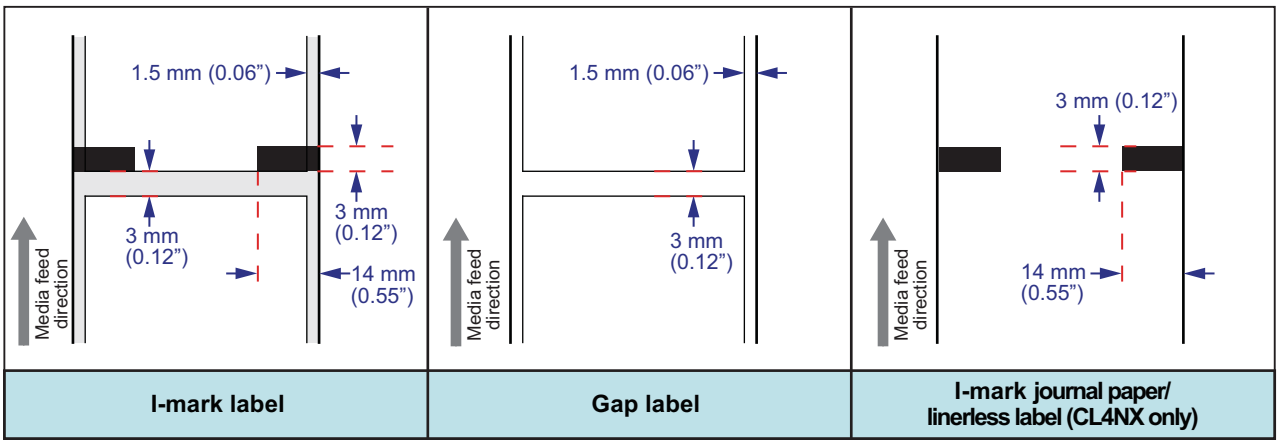

3.4.1 Adjusting the Position of the Media Sensor

When you use nonstandard media (for example, media with printing on the underside, or media with a special shape), the media sensor cannot sense the I-mark or Gap of the media correctly. In such a case, adjust the position of the media sensor to sense the I-mark or Gap correctly.

Adjust the media sensor guide to the position where it can sense the I-mark or Gap of the media.

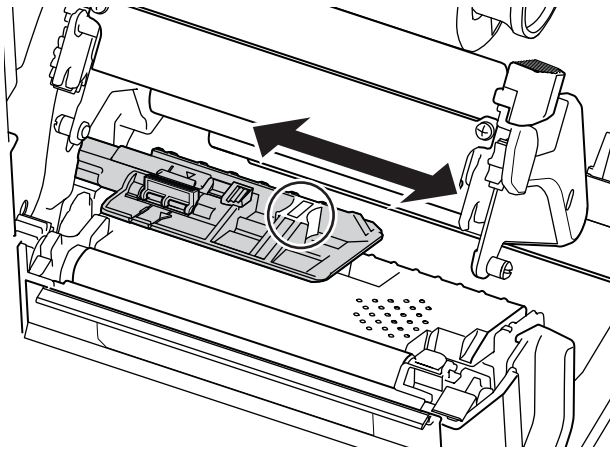

The I-mark sensor is below the ▯ mark, and the Gap sensor is below the ▽ mark.

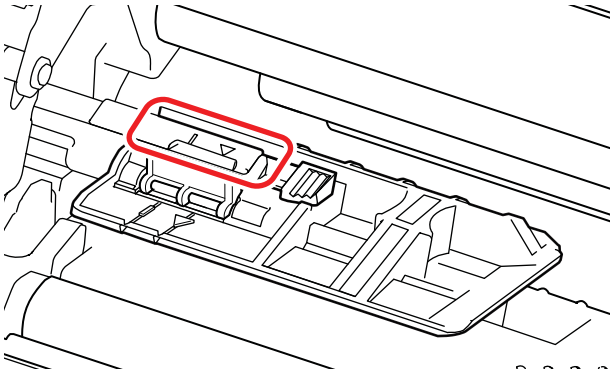

3.5 Loading Media

Use genuine media and ribbons for the printer, for optimum print quality.

⚠ CAUTION

- The print head and its surroundings are hot after printing. Be careful not to touch it, to avoid being burned.
- Touching the edge of the print head with your bare hand could cause injury.

3.5.1 Loading Media Roll

The routing path of the media is shown in the right picture.
When loading the media, make sure that the print side is facing up.

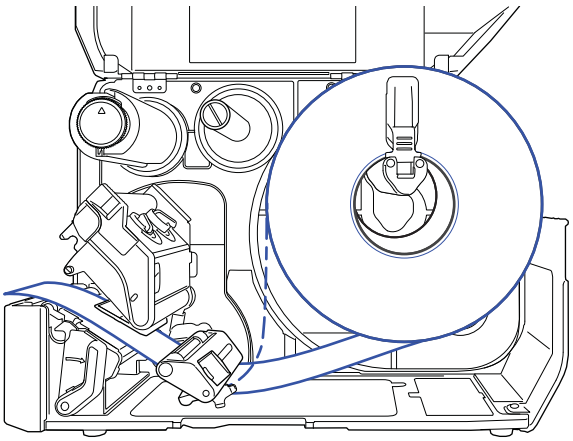

Face-in media

Face-out media

1 Open the **top cover**.

⚠ CAUTION

Open the top cover fully to prevent accidental drop of the cover.

2 Push the **head lock lever** towards the rear to unlock the print head.

3 Pull the **media holder guide** ① and **media guide** ② away from the printer.

Turn the **knob** ③ counterclockwise to release the media guide.

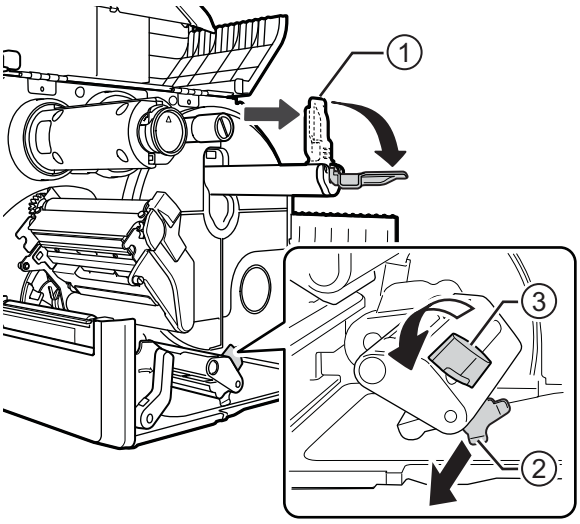

4 Load the media in the **media holder** ④. Make sure that the media roll is all the way in to inside of the printer.

5 Push the **media holder guide** ① lightly against the media roll.

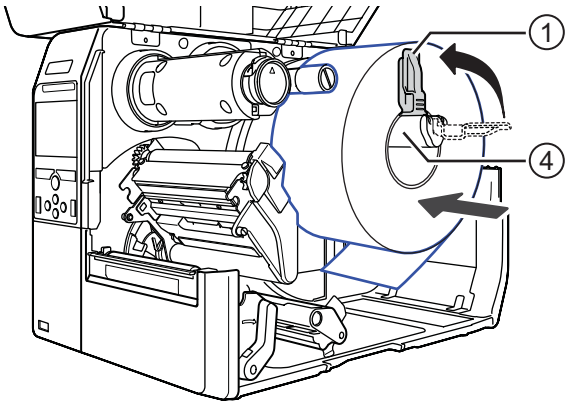

6 Pass the media below the **media damper** ⑤ and **media sensor guide** ⑥.

Make sure that the end of the media extends out the front of the printer.

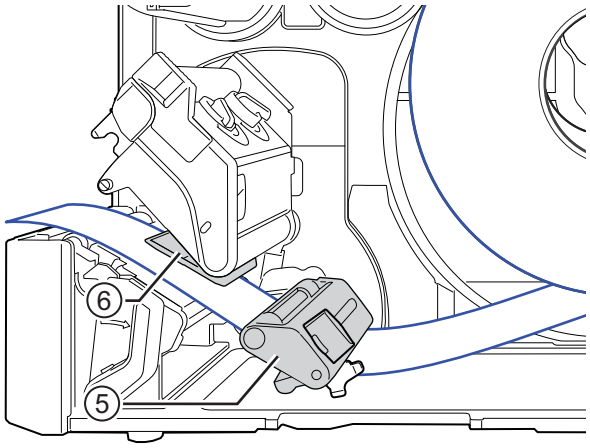

7 Press the **print head** down until the **head lock lever** is locked.

8 Press the **media guide** ② lightly against the end of the media, then turn the **knob** ③ to lock the media guide.

9 Close the **top cover**.

10 After loading the media and ribbon, perform a test print to make sure that the media is loaded correctly.

Refer to the **Test Print** menu in **Section 4.4.5 Tools Menu** for details on how to perform a test print.

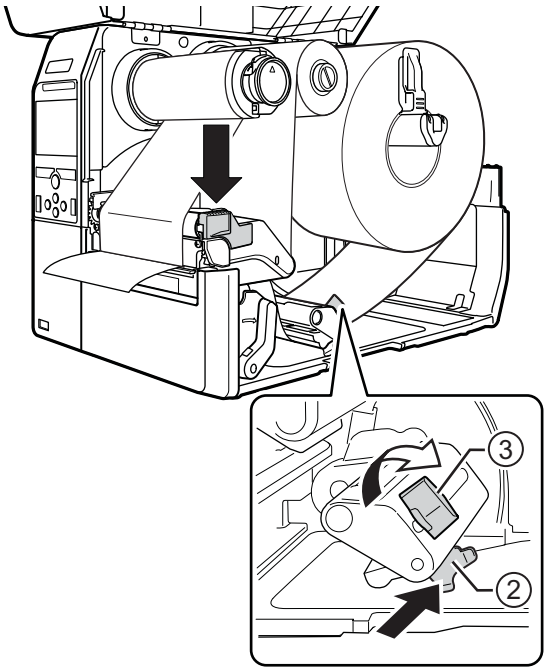

⚠ CAUTION

When closing the top cover, be careful not to pinch your fingers.

3.5.2 Loading Fan-fold Media

Place the fan-fold media on a flat location, then load the media from the rear of the printer or from the media slot on the bottom of the printer.

The routing path of the media is shown in the right picture.
When loading the media, make sure that the print side faces up.
After passing the media through the slot, refer to steps 5 through 10 of **Section 3.5.1 Loading Media Roll** to load the media.

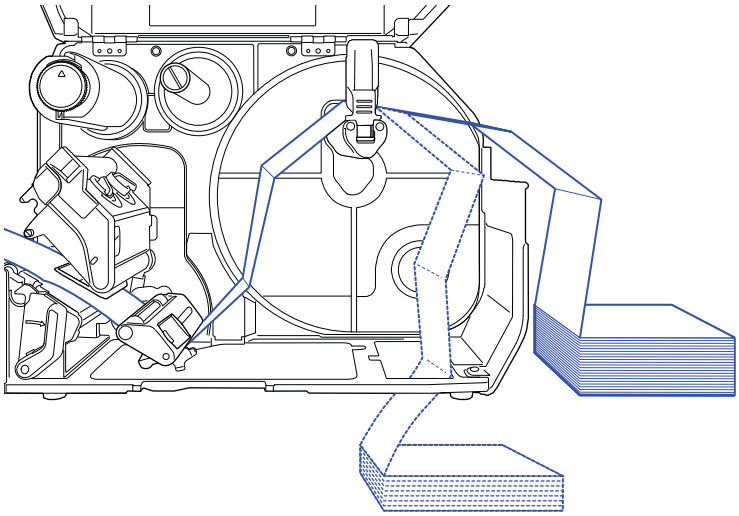

Load the media from the rear of the printer.

Load the media from the bottom of the printer.

Note

If a media jam frequently occurs with the media being loaded from the bottom of the printer, change the load location to the rear of the printer.

3.5.3 Loading Media with the Optional Cutter

Refer to the procedure in **Section 3.5.1 Loading Media Roll** or **Section 3.5.2 Loading Fan-fold Media** to load the media.

For models with a cutter installed, pull the **tab** ① of the **cutter unit** in the direction shown, then open up the cutter-open lever before passing the media through it.

After loading media, close the cutter-open lever and then push the **tab** ① in the reverse direction to lock it.

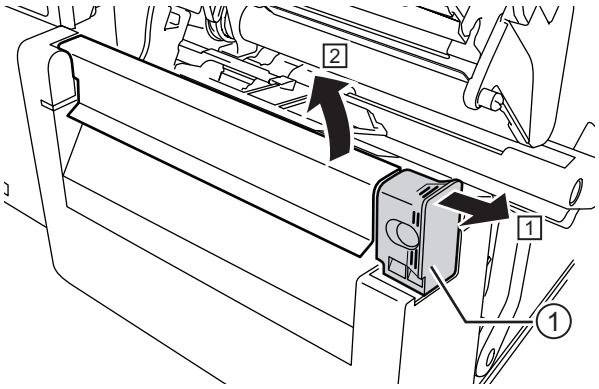

⚠ CAUTION

Be careful not to touch the cutter blade.

3.5.4 Loading Media with an Optional Dispenser and Liner Discharge Outlet

This section describes the procedure to dispense the label and eject the liner out of the printer.

1 Refer to steps 1 through 6 of **Section 3.5.1 Loading Media Roll** to load the media.

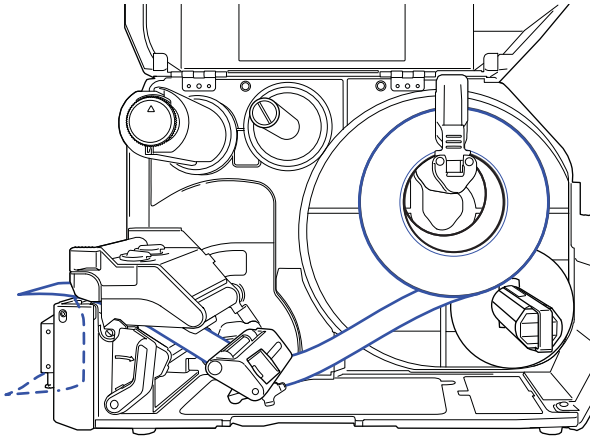

2 Press the **tab** ① at the front of the printer to open the **dispenser unit** ②.

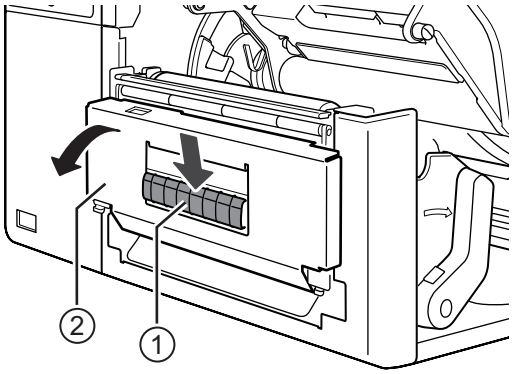

3 Remove about 30 cm (11.8”) of labels ③ from the liner ④, then pass the liner ④ through the gap of the dispenser unit to the outside of the printer.

4 Adjust the **dispenser roller** ⑤ to the center of the label.

5 Close the **dispenser unit**.

6 Close the **print head** and **top cover**.

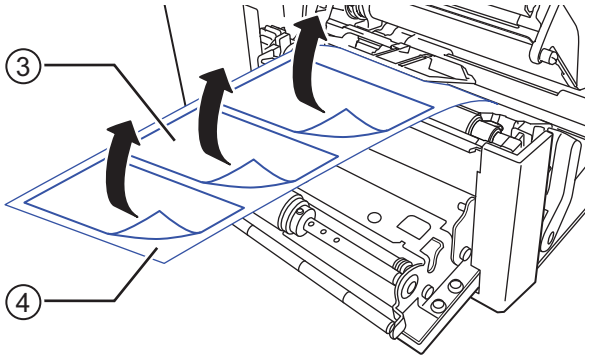

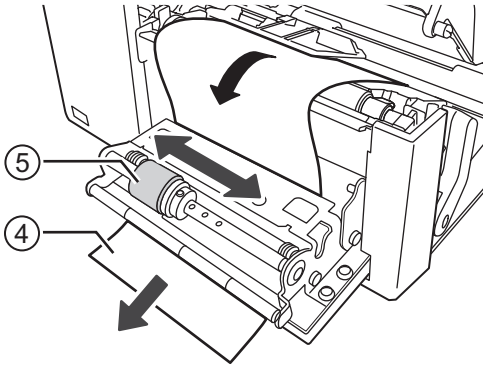

3.5.5 Loading Media with an Optional Dispenser and Liner Rewinder

This section describes the procedure to dispense the label and rewind the liner in the printer.

The routing path of the media is shown in the right picture.

Label

Liner

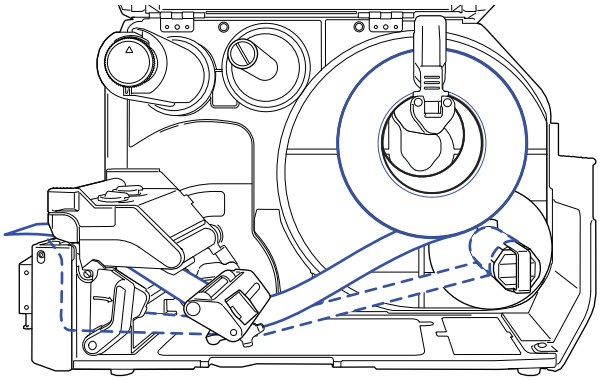

1 Refer to steps 1 through 7 of **Section 3.5.1 Loading Media Roll** to load the media.

2 Press the **tab** ① at the front of the printer to open the **dispenser unit** ②.

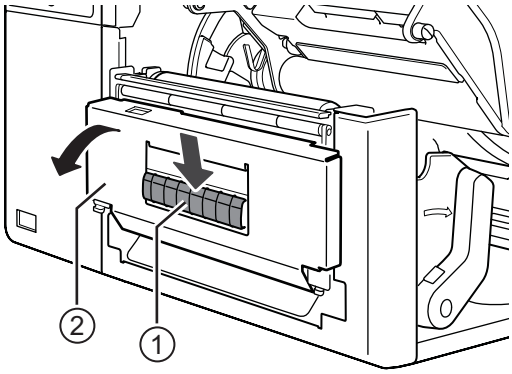

3 Remove about 80 cm (31.5”) of labels ③ from the liner ④, then pass the liner ④ through the gap of the **dispenser unit** to the inside of the printer.

4 Adjust the **dispenser roller** ⑤ to the center of the label.

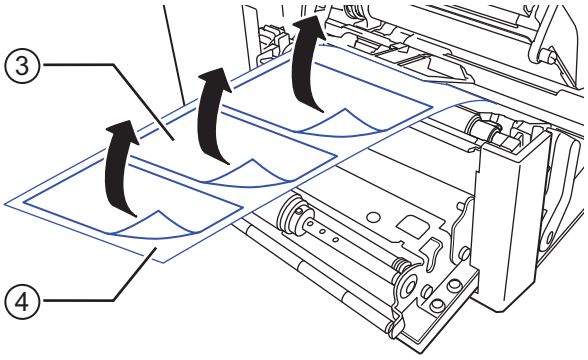

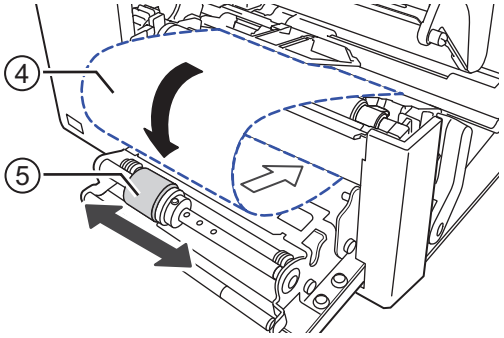

5 Pass the liner ④ below the **liner rewinder** ⑥, then attach it with the **clip** ⑦.

6 Rotate the **liner rewinder** ⑥ counterclockwise by hand, to wind the liner.

7 Close the **dispenser unit**.

8 Close the **print head** and **top cover**.

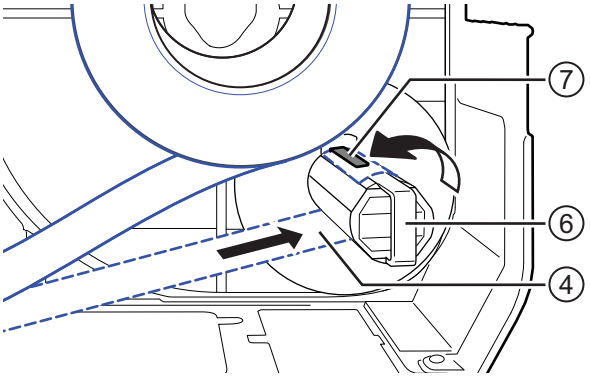

3.5.6 Removing the Liner from the Rewinder

1 Pull the clip ① away from the printer then pull to remove the liner ②.

2 Place the clip back to its original position.

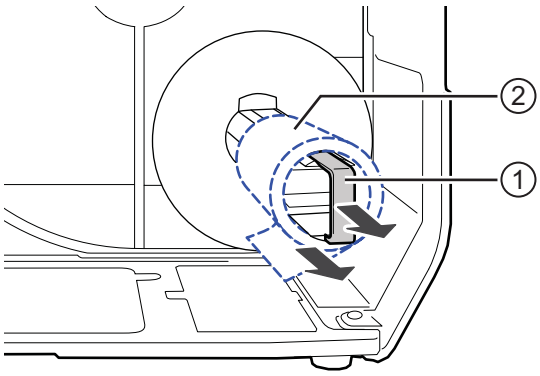

4 Operation and Configuration

The display of the printer varies depending on the following modes:
- Online mode: refer to **Section 4.1.1 Online Mode/Offline Mode**.
- Offline mode: refer to **Section 4.1.1 Online Mode/Offline Mode**.
- Error display: refer to **Section 4.1.3 Error Icon**.
- Settings mode: refer to **Section 4.2 Settings Mode**.

4.1 Display and Operation

4.1.1 Online Mode/Offline Mode

In online mode, you can execute the print job.

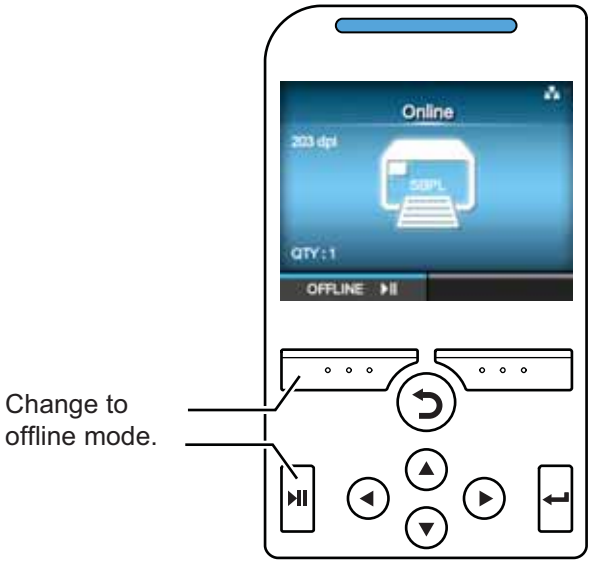

In offline mode, the print job will stop.
You can cancel the print job, feed the media or show the settings mode.

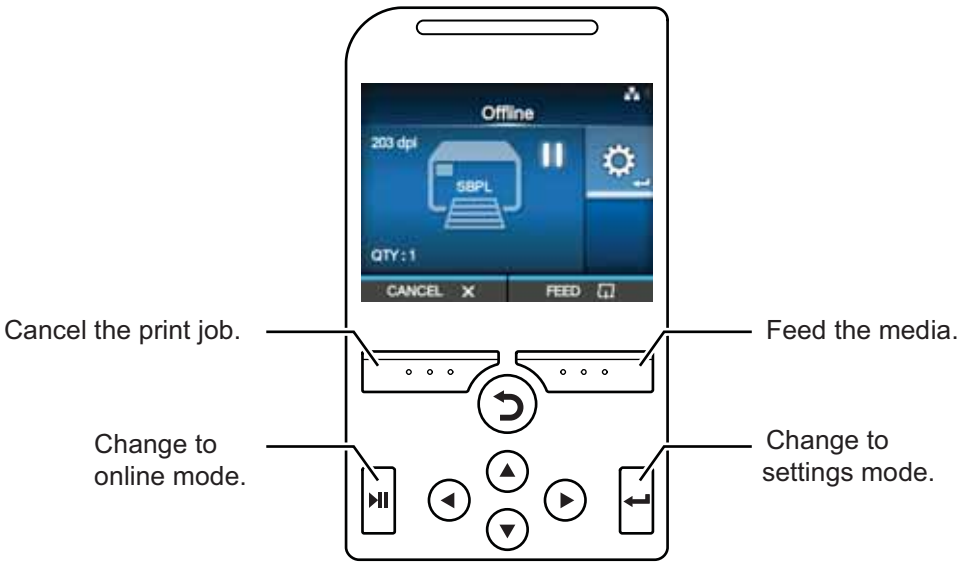

4.1.2 Status Icon

The icons on the status bar of the display show the printer status.

- Communication Interface Status

Icon	Description
	Bluetooth is enabled but not connected.
	Bluetooth is enabled and connected.
	Network link is enabled but not connected.
	Network link is enabled and connected.
	Not connected to the NTP time server.
	Wi-Fi is not connected.
	Wi-Fi is connected. Signal Level: 1
	Wi-Fi is connected. Signal Level: 2
	Wi-Fi is connected. Signal Level: 3
	Wi-Fi is connected. Signal Level: 4

Icon	Description
	Wi-Fi Direct is not connected.
	Wi-Fi Direct is connected. Signal Level: 1
	Wi-Fi Direct is connected. Signal Level: 2
	Wi-Fi Direct is connected. Signal Level: 3
	Wi-Fi Direct is connected or the printer is set to act as an access point. Signal Level: 4
	Printer is connected to USB host.
	Waiting for external input/output signal.
	RFID mode is enabled (CL4NX only).

- USB Memory Status

Icon	Description
	USB memory is connected.

- Print Job Status

Icon	Description
	Waiting for media removal.
	Ribbon is near the end.
	Command error detected.
	Receive buffer is nearly full.

Icon	Description
	Defective print head is detected.
	Incompatible print head is detected.

- Maintenance Status

Icon	Description
	Clean the print head or platen roller.
	Replace the print head.
	Replace the platen roller.
	Replace the cutter unit.

4.1.3 Error Icon

When a printer error occurs, the error status shows on the screen with an icon.
When an error occurs, you can perform the following operations:

- Change to online mode.
- Cancel the error.
- Feed the media.
- Change to settings mode.
- Change to guidance video.

Note

The available operations vary, depending on the situation.

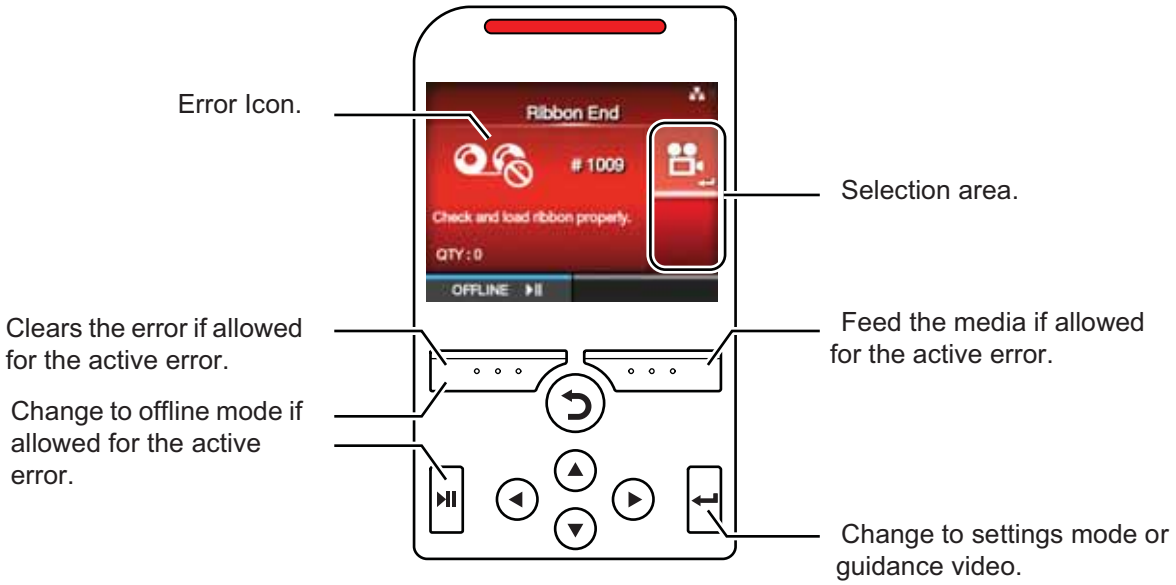

- Error Icon

Icon	Description
	Label end or media end is detected.
	Ribbon end is detected.

Icon	Description
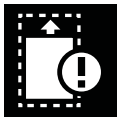	Print data is larger than the media size.
	Sensor error is detected.
	Print head is unlocked.
	Print head error is detected.
	Communication error is detected.
	Receive buffer overflow.
	BCC error is detected.
	CRC error is detected.
	Cutter error is detected.
	USB memory is not accessible or there is no free space in the USB memory.
	Program error or writing to the memory failed.

Icon	Description
	Calendar error is detected.
	Writing/reading information to/from the RFID tag failed (CL4NX only).
	A print job without RFID command is sent to an RFID tag.
	Wireless LAN setting error is detected.
	Printer error is detected.
	The temperature of the print head has exceeded the tolerance range.
	RFID module is defective (CL4NX only).
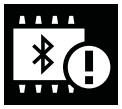	Bluetooth module is defective.
	Authentication with the server failed.
	Authentication with the server timed out.
	Paper jam is detected.

4.1.4 Guidance Video

The printer contains the following guidance videos for visual reference of printer operations.

No.	Guidance **Video**	Show video from		
		Error screen	**Startup Guide**	**Information menu**
1	Media roll loading (Standard)	-	Possible	Possible
2	Media roll loading (Cutter)	-	Possible	Possible
3	Media roll loading (Linerless) (CL4NX only)	-	Possible	Possible
4	Media roll loading (Dispenser)	-	Possible	Possible
5	Media roll loading (Dispenser with rewinder)	-	Possible	Possible
6	Fan-fold media loading (Standard)	-	Possible	Possible
7	Fan-fold media loading (Cutter)	-	Possible	Possible
8	Ribbon loading	-	Possible	Possible
9	Media roll replacement (Standard)	Possible	-	Possible
10	Media roll replacement (Cutter)	Possible	-	Possible
11	Media roll replacement (Linerless) (CL4NX only)	Possible	-	Possible
12	Media roll replacement (Dispenser)	Possible	-	Possible
13	Media roll replacement (Dispenser with rewinder)	Possible	-	Possible
14	Fan-fold media replacement (Standard)	Possible	-	Possible
15	Fan-fold media replacement (Cutter)	Possible	-	Possible
16	Ribbon replacement	Possible	-	Possible
17	Print head replacement	-	-	Possible
18	Platen roller replacement	-	-	Possible
19	Cleaning	-	-	Possible

You can play the guidance video using the following procedures:

- **To play the guidance video from the error screen**

1 On the error screen, press the ↵ button to play the guidance video.

If there are more videos to choose from, press the arrow buttons to select the guidance video, then press ↵ button.
The guidance video will playback.

2 Follow the procedures to resolve the error according to the guidance video.

- **To get access to the guidance video in online mode**

1 Press the ⏯ button in online mode.

The printer enters offline mode.

2 Press the ↵ button.

The printer enters settings mode.

3 Select **Information** using the ◀/▶ buttons.

4 Press the ↵ button.

The item list shows.

5 Select **Help** using the ▲/▼ buttons.

6 Press the ↵ button.

The list of guidance videos shows.

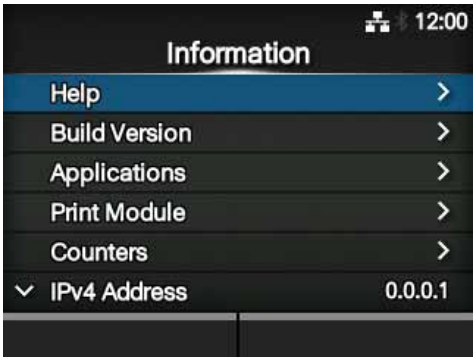

7 Select the video for playback using the ▲/▼ buttons, then press the ↵ button.

The guidance video will playback.

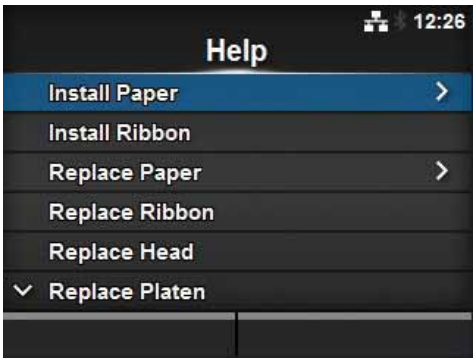

The guidance video operating procedures are described below:

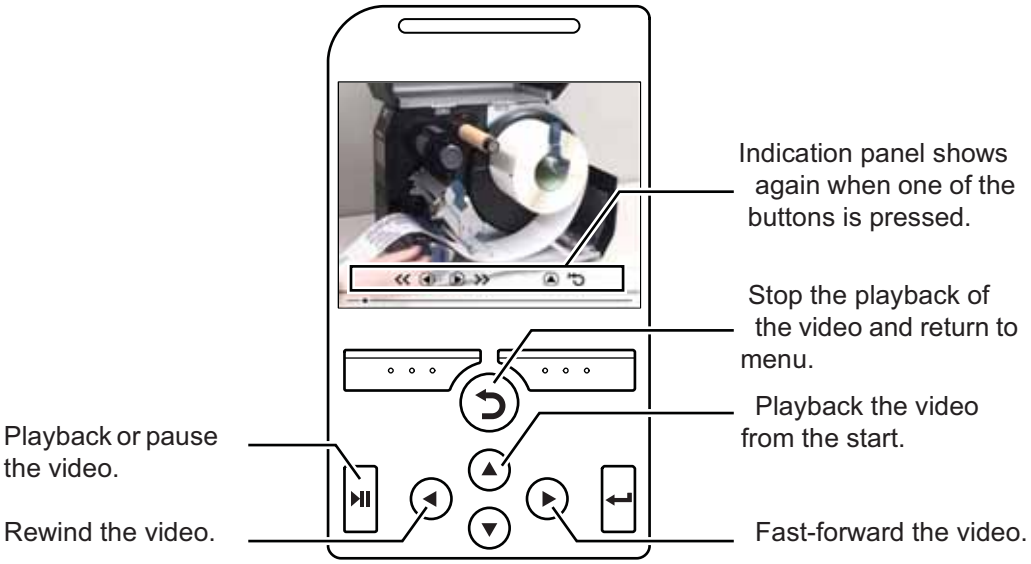

4.1.5 How to Cancel the Print Job

Cancel the print job according to the following procedure:

1 Press the ⏯ button to change the printer to offline mode.

2 Press the left soft button.

A message shows, confirming that you want to cancel the print job.

3 Press the right soft button.

The print job will be canceled.

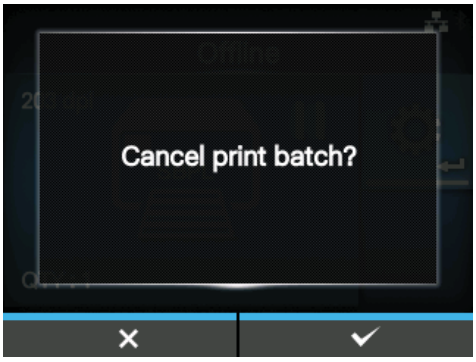

4.2 Settings Mode

In settings mode, the following menus show:

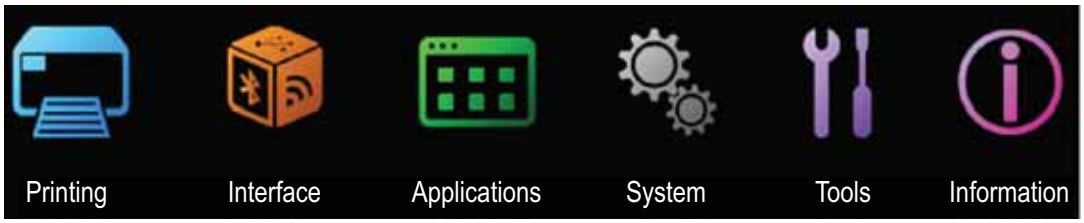

Menu	Description
Printing	Access the settings related to printing.
Interface	Access the settings related to the interfaces.
Applications	Access the settings related to the printer command.
System	Access the settings related to the display language, buzzer volume etc.
Tools	Access the test print, initialization and other settings.
Information	Access the printer information and help videos.

4.2.1 Changing to Settings Mode

Change the printer to settings mode according to the following procedure:

1 Press the ⏯ button in online mode.

The printer enters offline mode.

2 Press the ↵ button.

The printer enters settings mode.

To exit the settings mode, press the ⏯ button.

4.2.2 Log In to/Log Out of the Settings Mode

After entering the settings mode, you will be prompted with password if password is enabled (Refer to **Password Enable** in *System* > *Password*).

When you exit from the settings mode after a successful login, **LOG OUT** shows on the bottom left of the screen.
Press the left soft button if you want to log out immediately.
Password is required to enter the settings mode again.

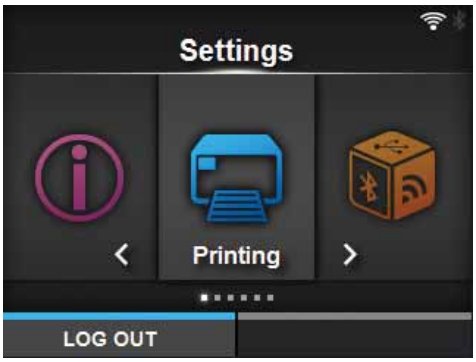

Note

With password enabled, if no button is pressed for about ten minutes after login, the login session will end automatically. Password is required to enter the settings mode again.

4.2.3 Item Selection

Select an item in settings mode according to the following procedure:

1 Select menu using the ◀/▶ buttons.

2 Press the ↵ button.

The item list shows.

3 Select an item using the ▲/▼ buttons.

4 Press the ↵ button.

If the selected item is a setting item, the setting screen shows.
If the selected item is a command, the command will be executed.

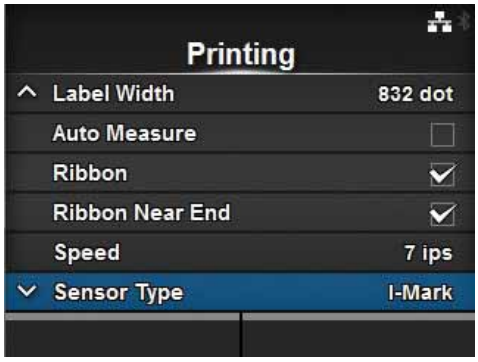

Items with a "**>**" indicated on the right side have more items in the next layer of the submenu.
Similarly, select the item using the ▶ or ↵ button.
Press the ↩ button to return to the previous screen.

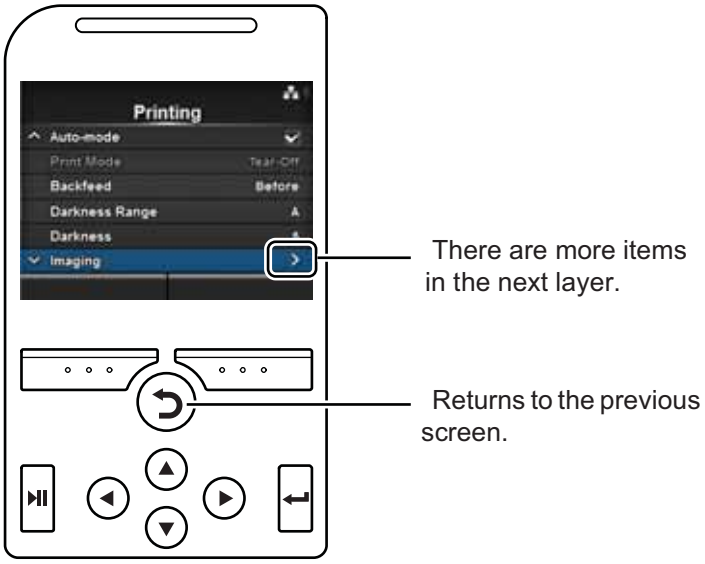

4.2.4 Alphanumeric Input

This section describes the alphanumeric input on the setting screen and how to select an item from the list.

- **Character Input**

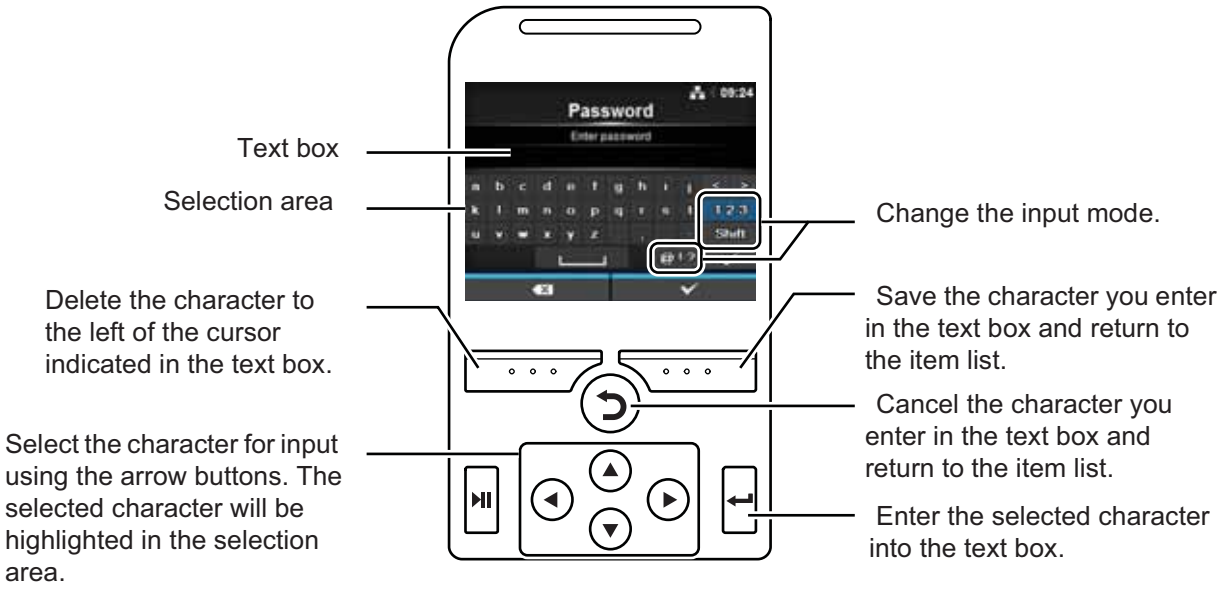

- **Numeric Input**

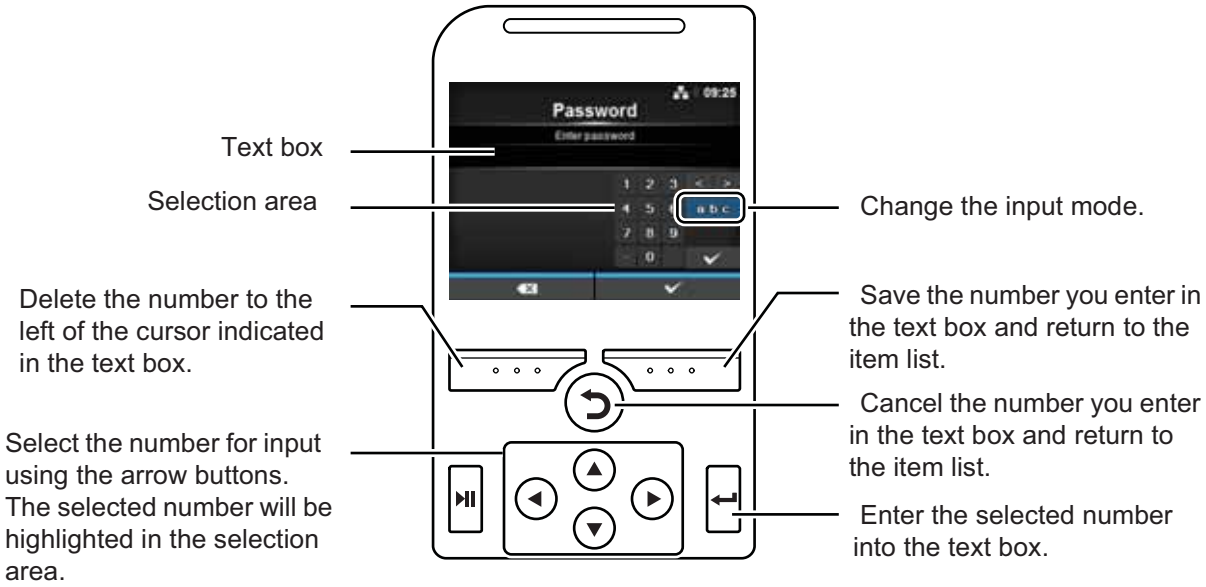

- **Selection from the list**

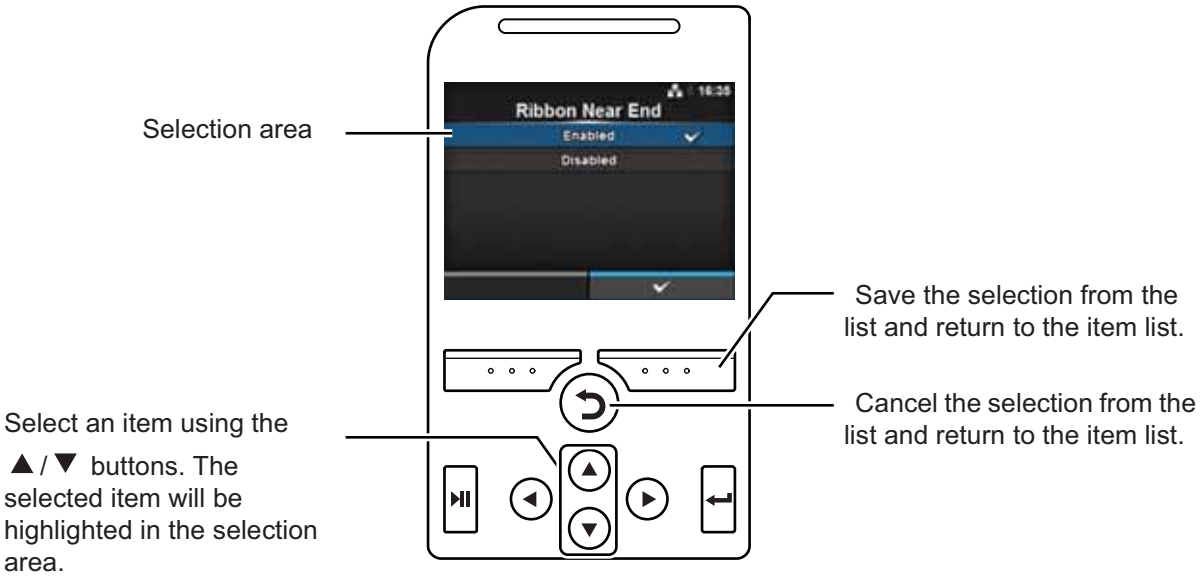

- **Selection from the box**

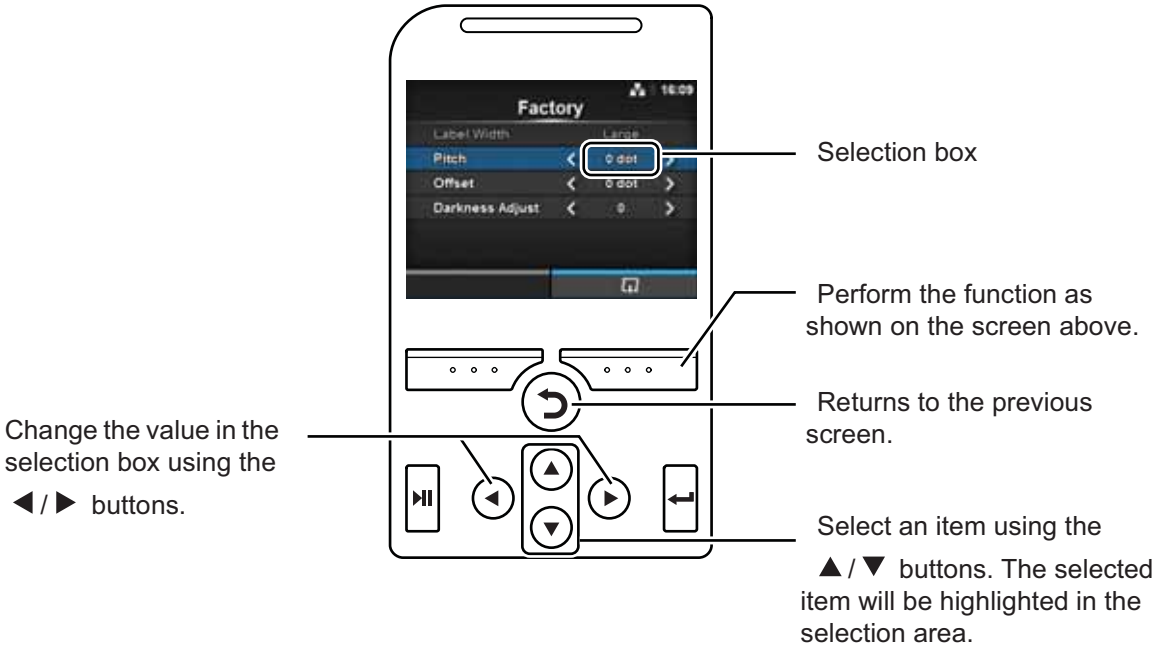

- **Entering an IP address**

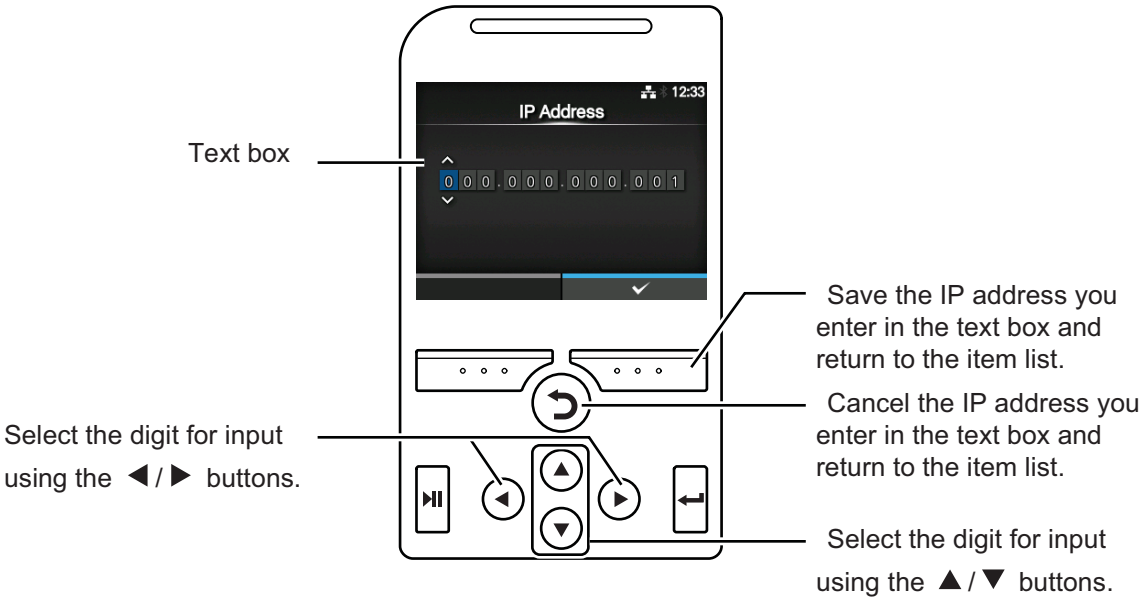

4.3 Settings Menu Tree Structure

There are six main menus in Settings mode and each menu contains many layers of submenus. The tables below outline the Settings menus tree structure. Refer to the tree structure to understand where information is located in the setting menus. Click on the items in blue to link directly to the details of the selected items.

Printing	Submenus	
Label Length		
Label Width		
Auto Measure		
Ribbon		
Ribbon Near End		
Speed		
Sensor Type		
Auto-mode		
Print Mode		
Backfeed		
Eject Cut		
Darkness Range		
Darkness		
Imaging	Vertical	
	Horizontal	
Advanced	Calibrate	Auto-calibration
		GAP Levels
		GAP Slice Level
		I-Mark Levels
		I-Mark Slice Level
	Head Check	
	Head Check Mode	
	Every Page	
	Check Media Size	
	Adjustments	Offset
		Pitch
		Darkness Adjust
	Start Online	
	Feed After Error	
	Feed At Power On	
	Max Feed	
	Paper End	
	Head Base Position	
	Prioritize	
	Reprint	
	Print End Position	

Interface	Submenus				
Network	Settings	LAN	IPv4	Mode	
				DHCP/Renew Lease	
				IP Address	
				Netmask	
				Gateway	
				DNS	
			IPv6	Mode	
				DHCP/Renew Lease	
				IP Address	
				Prefix Length	
				Gateway	
				DNS	
			Proxy	Enabled	
				Server	
				Exclude	
		Wi-Fi	IPv4	Mode	
				DHCP/Renew Lease	
				IP Address	
				Netmask	
				Gateway	
				DNS	
			IPv6	Mode	
				DHCP/Renew Lease	
				IP Address	
				Prefix Length	
				Gateway	
				DNS	
			Proxy	Enabled	
				Server	
				Exclude	
			Wi-Fi Protected Setup	Button (PBC)	
				PIN	
			Wi-Fi Direct	Device Name	
				Connect	
				Start Group	
				Remove Group	
				Disconnect	
				SSID	
				IP Address	
				Passphrase	
			SSID		

Interface	Submenus					
Network	Settings	Wi-Fi	Hidden SSID			
			Mode			
			Channel			
			Security			
			WEP Conf.	Authentication		
				Key Index		
				Key #1 - Key #4		
			WPA Conf.	WPA Authentication		
				PSK		
				EAP Conf.		
			EAP Conf.	EAP Mode		
				Inner Method		
				Username		
				Password		
				Anon. Outer ID		
				Verify Server Cert.		
				Private Key P/W		
				PAC Auto Provisioning		
				PAC P/W		
		Interface				
	Services	Ports	Port1			
			Port2			
			Port3			
			Flow Control			
			BCC			
		NTP	Enable			
			Error			
			Time Server IP			
		LPD				
		FTP				
		SNMP	sysContact			
			sysName			
			sysLocation			
			Agent	Enable		
				Read-Only	SNMP Version	
					Community	
					User	
					User Security	
					Authentication Protocol	
					Authentication Passphrase	
					Privacy Protocol	
					Privacy Passphrase	

Interface	Submenus				
Network	Services	SNMP	Agent	Read-Write	SNMP Version
					Community
					User
					User Security
					Authentication Protocol
					Authentication Passphrase
					Privacy Protocol
					Privacy Passphrase
			Traps	Enable	
				SNMP Version	
				IP Version	
				Destinations	
				Destination 1	
				Destination 2	
				Destination 3	
				Community	
				User	
				Engine ID	
				Security	
				Authentication Protocol	
				Authentication Passphrase	
				Privacy Protocol	
				Privacy Passphrase	
	Advanced	ARP Announce-ment	Additional		
			Periodic		
IEEE1284	Flow Control				
	BCC				
RS-232C	Baudrate				
	Parameters				
	Flow Control				
	BCC				
USB	Flow Control				
	BCC				

Interface		Submenus		
	Bluetooth	Enable		
		Name		
		Pin Code		
		BD Address		
		Firm Version		
		Host BD Addr		
		Authentication		
		ISI		
		ISW		
		PSI		
		PSW		
		CRC Mode		
		Flow Control		
	Ignore CR/LF			
	Ignore CAN/DLE			
	External I/O	Enable		
		Signals	EXT 9PIN	
			EXT Mode	
			Inputs	Start Print
				Reprint
			Outputs	Paper End
				Ribbon End
				Machine Error
				Print Done
				Qty/Offline
				Ribbon Near End
				Dispenser
			EXT I/O Re-print	

Interface		Submenus		
	RFID (CL4NX only)	Antenna Pitch		
		Write Power		
		Read Power		
		Tag Offset		
		Reader Model		
		Reader Version		
		View	Memory Bank	
		Retry Mode		
		Retries		
		Mark bad tags		
		MCS	MCS	
			Chip Manufacturer	
			Pre-Encoded Tag	
			Assign Prefix	
			MCS Prefix Digit	
			Input Prefix	
		Non-RFID Warning		
		Log RFID Data		
		Data To Record		
		Output Error Mode		
		Pulse Length		
		Counters	Life time	Count Success
				Count Failure
				Count Total
			User	Count Success
				Count Failure
				Count Total

Applications	Submenus		
Protocol			
SBPL	Show Error		
	Standard Code		
	Orientation		
	Font Settings	Zero Slash	
		Kanji	Kanji Set
			Character Code
		Proportional	
		Code Page	
		€	
	Compatible	CODE128(C) Zero Fill	
SZPL	Label	Shift	
		Top	
	Caret		
	Delimiter		
	Tilde		
	Clock Format		
SIPL	Font Settings	Zero Slash	
		€	
		Code Page	
		Proportional	
STCL	Command Head	Control Code	
		1st Byte Code	
		2nd Byte Code	
		3rd Byte Code	
		Font Settings	Zero Slash
			€
			Code Page
SDPL	Control Code	Code Type	
		SOH	
		STX	
		CR	
		CNTBY	

System	Submenus		
Regional	Messages		
	Unit		
	Time		
	Date		
	Time Zone	Region	City
Notifications	Clean Printhead	Clean Printhead	
		Cleaning Interval	
		Clean Counter	
	Change Printhead	Change Printhead	
		Printhead Interval	
		Printhead Count	
	Change Cutter	Change Cutter	
		Cutter Life	
		Cutter Count	
	Change Platen	Change Platen	
		Platen Interval	
		Platen Count	
Sound	Error Sound		
Energy Saving	Sleep Timeout		
LCD Brightness			
Show Total Count			
Password	Password Enable		
	Install Security		
	Change Password	admin	
		manager	
		level1	
		rfid	

Tools	Submenus	
Test Print	Factory	Label Width
		Pitch
		Offset
		Darkness Adjust
	Configure List	Label Width
		Label Length
		Pitch
		Offset
		Darkness Adjust
	Configure QR	Label Width
		Label Length
		Pitch
		Offset
		Darkness Adjust
	Paper Sensor	Label Width
		Label Length
		Pitch
		Offset
		Darkness Adjust
HEX-Dump	Hex Dump Mode	
	Buffer Dump	
	Log Files	Copy
		Remove
		Print
Reset	Select	Data
		Data & Settings
		Settings
Profiles	Delete	
	Load	
	Save	
	Start with	
Service		
Factory		
Certificates	HTTPS	
	Wi-Fi Root CA	
	Wi-Fi Client	
	Wi-Fi Private Key	
	EAP-FAST PAC File	
Startup Guide		

Information	Submenus		
Help	Install Paper	Roll	Standard
			Cutter
			Linerless (CL4NX only)
			Dispenser
			Dispenser with Rewinder
		Fanfold	Standard
			Cutter
	Install Ribbon		
	Replace Paper	Roll	Standard
			Cutter
			Linerless (CL4NX only)
			Dispenser
			Dispenser with Rewinder
		Fanfold	Standard
			Cutter
	Replace Ribbon		
	Replace Head		
	Replace Platen		
	Cleaning		
Build Version	Name		
	Date		
	Checksum		
	Kernel Version		
	Boot Version	Disks	
		Warp!!-mode	
		Date	
Applications			
Installation Log	RPM Log		
	System Restore		
Print Module	Boot	Name	
		Release Date	
		Checksum	
	Main	Name	
		Release Date	
		Checksum	
Counters	Head	Life	
		Head 1	
		Head 2	
		Head 3	
	Cutter		
IPv4 Address			
IPv6 Address			

Information	Submenus
LAN MAC	
Wi-Fi MAC	
Wi-Fi Region	
Wi-Fi Status	
Wi-Fi Direct	SSID
	Role
	Device Address
	IP Address
	Passphrase
Wi-Fi Versions	

4.4 Details of the Settings Menu Screen

4.4.1 Printing Menu

The following settings are available in the **Printing** menu:

Printing			
1	Label Length	Set the length of the media.	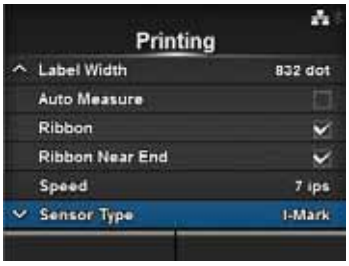
2	Label Width	Set the width of the media.	
3	Auto Measure	Automatically measure the length of the media.	
4	Ribbon	Set whether to print using a ribbon or direct thermal media.	
5	Ribbon Near End	Enable or disable the warning when the ribbon is about to run out. *Shows only if you have selected **Use Ribbon** in the **Ribbon** menu.	
6	Speed	Set the print speed.	
7	Sensor Type	Set the media sensor type.	
8	Auto-mode	Automatically set the print mode.	
9	Print Mode	Manually set the print mode.	
10	Backfeed	Set the backfeed operation.	
11	Eject Cut	Set the time from the print completion until the print cut. *Shows only if you have selected **Cut & Print** in the **Print Mode** menu.	
12	Darkness Range	Set the range of the print darkness.	
13	Darkness	Set the print darkness.	
14	Imaging	Set the print reference position in the vertical and horizontal directions.	
15	Advanced	Set the sensor operation and print motion.	

Label Length

Printing > Label Length

Set the length of the media.
The setting range varies depending on the print resolution of the printer.
The setting range of the label length is as follows:

<CL4NX>
- 203 dpi: 1 to 20000 dots
- 305 dpi: 1 to 18000 dots
- 609 dpi: 1 to 9600 dots

<CL6NX>
- 203 dpi: 1 to 20000 dots
- 305 dpi: 1 to 18000 dots

Note
Set the label size to a value that includes the liner.

Label Width

Printing > Label Width

Set the width of the media.
The setting range varies depending on the print resolution of the printer.
The setting range of the label width is as follows:

<CL4NX>
- 203 dpi: 1 to 832 dots
- 305 dpi: 1 to 1248 dots
- 609 dpi: 1 to 2496 dots

<CL6NX>
if Head Base Position is Standard
- 203 dpi: 1 to 1216 dots
- 305 dpi: 1 to 1984 dots

if Head Base Position is left-justify
- 203 dpi: 1 to 1340 dots
- 305 dpi: 1 to 2010 dots

Note
Set the label size to a value that includes the liner.

Auto Measure

Printing > Auto Measure

The printer automatically measures the length of the media.
The measured length of the media will be automatically saved in **Label Length**.
Available when you have selected **Gap** or **I-Mark** in the **Sensor Type** menu.
The setting procedure of the label length using the Auto Measure function is as follows:

1. Load the media.
2. Set **Auto Measure** to **Enabled**.
3. Press the ⏯ button or ↩ button to show the online or offline screen.
4. Open the print head. (Head Open error occurs)
5. Close the print head. (Returns to offline screen)
6. When you press the ⏯ button, the printer feeds two pieces of label and measures the label length.
7. The measured label length will be saved in **Label Length**.

Note
When you have set **Auto Measure** to **Enabled**, this function executes when the printer powers on.

Ribbon

Printing > Ribbon

Set whether to print using a ribbon or direct thermal media.
The options are as follows:

- **Use Ribbon**: Print with a ribbon.
- **Direct Thermal**: Print using direct thermal media.

Ribbon Near End

Printing > Ribbon Near End

Show or do not show the warning icon when the ribbon is about to run out.
The options are as follows:

- **Enabled**: Show the warning icon.
- **Disabled**: Do not show the warning icon.

Note
The warning icon shows in the status bar on the upper part of the screen.

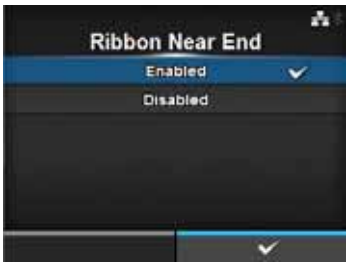

Speed

Printing > Speed

The setting range varies depending on the print resolution of the printer.
The setting range of the print speed is as follows:

<CL4NX>
- 203 dpi: 2 to 10 ips (inches/sec)
- 305 dpi: 2 to 8 ips (inches/sec)
- 609 dpi: 2 to 6 ips (inches/sec)

If the optional linerless kit is installed, the setting range will be from 2 to 6 ips (inches/sec) regardless of the print resolution of the printer.
If Speed is set to 7 ips and above, it will change to 4 ips after the optional linerless kit is installed.

<CL6NX>
- 203 dpi: 2 to 10 ips (inches/sec)
- 305 dpi: 2 to 8 ips (inches/sec)

Note
Setting the print speed to a level that is too fast may affect the print quality.

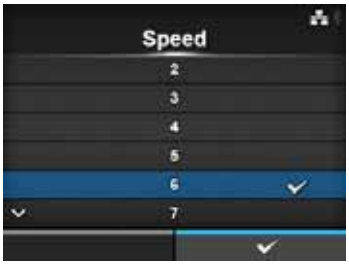

Sensor Type

Printing > Sensor Type

Set the type of sensor for sensing the media.
The options are as follows:
- **None**: Disable the media sensor.
- **Gap**: Use the transmissive type sensor.
- **I-Mark**: Use the reflective type sensor.

If you have selected **Tear-Off**, **Dispenser** or **Cut & Print** in **Print Mode**, only **Gap** and **I-Mark** will be available in the **Sensor Type** menu.
If you have selected **Linerless** in **Print Mode** (CL4NX only), only **None** and **I-Mark** will be available in the **Sensor Type** menu.

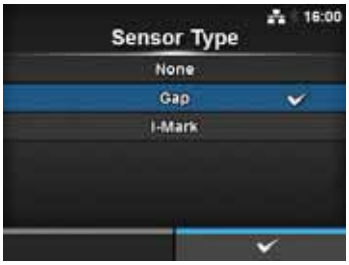

Auto-mode	
Printing > Auto-mode When using Auto-mode, the print mode changes automatically according to the status of the installed option unit. The options are as follows: • **Enabled**: The print mode changes automatically. • **Disabled**: The print mode changes according to the setting of the **Print Mode**. Operate in cutter mode if you have installed the optional cutter unit. Operate in dispenser mode if you have installed the optional dispenser unit. Operate in linerless mode if you have installed the optional linerless kit (CL4NX only).	

Print Mode

Printing > Print Mode

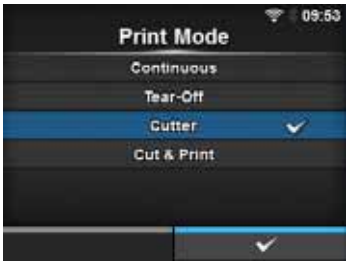

Set the print mode.
The options are as follows:

- **Continuous**: Print the specified number of media. The media remains in position for printing at all times.
- **Tear-Off**: After printing the specified number of media, the printer feeds the last printed media so that it is fully extended out of the printer's front for removal. After printing, tear off the media manually.
- **Cutter**: Cut each media while printing the specified number of media. You can specify this option only if you have installed the cutter unit.
- **Cut & Print**: Cut the last printed media while printing media with next data. If next data is not received within the period specified in Eject Cut, the printer will feed the media to the cut position and cut the last printed media. You can specify this option only if you have installed the cutter unit.
- **Dispenser**: Peel the liner from the printed label as it is advanced to the printer's front. Once the printed label has been removed from the printer for application, the next label will retract and position itself for printing. You can specify this option only if you have installed the dispenser unit.
- **Linerless** (CL4NX only): Cut each label while printing the specified number of labels. You can specify this option only if you have installed the linerless kit.

<CL4NX>
If no option is installed, **Continuous** and **Tear-Off** are available in the **Print Mode** menu.
If the optional cutter unit is installed, **Continuous**, **Tear-Off**, **Cutter** and **Cut & Print** are available in the **Print Mode** menu.
If the optional dispenser unit is installed, **Continuous**, **Tear-Off** and **Dispenser** are available in the **Print Mode** menu.
If the optional linerless kit is installed, only **Linerless** is available in the **Print Mode** menu.

<CL6NX>
If no option is installed, **Continuous** and **Tear-Off** are available in the **Print Mode** menu.
If the optional cutter unit is installed, **Continuous**, **Tear-Off**, **Cutter** and **Cut & Print** are available in the **Print Mode** menu.
If the optional dispenser unit is installed, **Continuous**, **Tear-Off** and **Dispenser** are available in the **Print Mode** menu.

Note
You cannot set the **Print Mode** if **Auto-mode** is **Enabled**.

Backfeed

Printing > Backfeed

Backfeed is applicable only when the print mode is set to tear-off mode, cutter mode, dispenser mode or linerless mode (CL4NX only).
The options are as follows:

- **None**: Do not backfeed.
- **After**: After cut, backfeed the front part of the next media to the print head position. For dispenser mode, backfeed the front part of the next label after dispensing the label.
- **Before**: Before printing, backfeed the front part of the media to the print head position.

If you have selected **Tear-Off** or **Linerless** (CL4NX only) in **Print Mode**, only **Before** is available in the **Backfeed** menu.

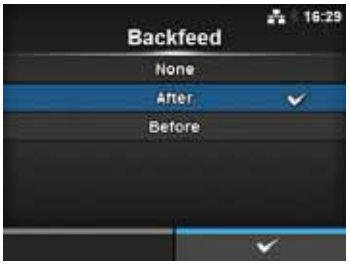

Eject Cut

Printing > Eject Cut

Set the Eject cut motion for the last printed media. Cut the last media after the specified timing.
Shows only when you have selected **Cut & Print** in the **Print Mode** menu.
The setting range is from 0 to 5 (sec).

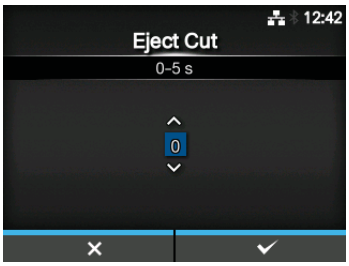

Darkness Range

Printing > Darkness Range

The darkness range affects the print darkness.
The options are as follows:
A, B, C, D, E, F
*The normal setting is A. You can also select B to F but the print darkness does not change.

Darkness

Printing > Darkness

Specify the print darkness from ten steps.
The setting range is from 1 to 10. 1 is the lightest and 10 is the darkest.

To further fine tune the print darkness, set the items in **Printing** > **Advanced** > **Adjustments** > **Darkness Adjust**.

Imaging

Printing > Imaging

Set the print reference position in the vertical and horizontal directions.
The setting items are as follows:

1	Vertical	Offset the print position in the vertical (feed) direction.
2	Horizontal	Offset the print position in the horizontal direction.

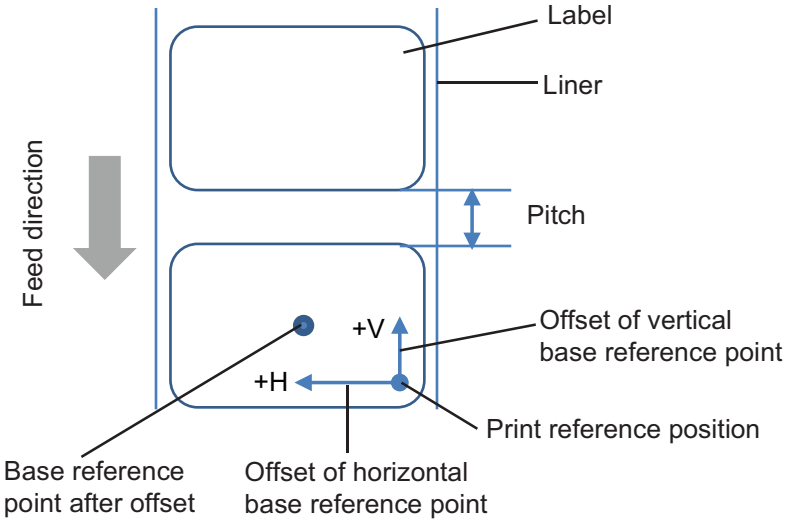

Vertical

Printing > Imaging > Vertical

Set the print position in the vertical direction.
Set the offset value '+' from the print reference position to move the print position opposite the feed direction and value '-' to move the print position in the feed direction.
The setting range is from -792 to +792 dots.

Horizontal

Printing > Imaging > Horizontal

Set the print position in the horizontal direction.
Set the offset value '+' from the print reference position to move to the left side and value '-' to move to the right side of the printer (when facing the front of the printer).
The setting range is from -792 to +792 dots.

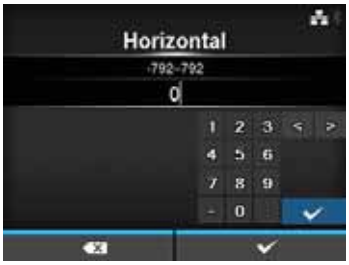

Advanced

Printing > Advanced

Set detailed sensor operation and print motion.
The setting items are as follows:

1	Calibrate	Adjust the media sensor.
2	Head Check	Check if there is a filament disconnection of the print head.
3	Head Check Mode	Set the mode for head check. *Shows only if you have selected **All** or **Barcode** in the **Head Check** menu.
4	Every Page	Set the interval for head check. *Shows only if you have selected **Every Page** in the **Head Check Mode** menu.
5	Check Media Size	Enable or disable media size check. *Shows only if you have selected **Gap** or **I-Mark** in the **Sensor Type** menu.
6	Adjustments	Correct the offset, print position and print darkness.
7	Start Online	Start in online mode at power on.
8	Feed After Error	Feeds the media when an error occurs.
9	Feed At Power On	Automatically feeds the media at power on.
10	Max Feed	Set the length to feed after printing.
11	Paper End	Select the sensor for sensing the paper end.
12	Head Base Position	Set the edge position for printing.
13	Prioritize	Select the prioritized setting.
14	Reprint	Enable or disable the reprint function.
15	Print End Position	Set the print end position of the media.

Calibrate

Printing > Advanced > Calibrate

Adjust the media sensor level.
In instances of media detection malfunction, adjust the media sensor level (Gap and I-mark sensor).
The setting items are as follows:

1	Auto-calibration	Automatically adjust the sensor level. *Does not show if you have installed the optional linerless kit (CL4NX only).
2	GAP Levels	Manually set the Gap sensor level.
3	GAP Slice Level	Manually set the Gap sensor slice level.
4	I-Mark Levels	Manually set the I-mark sensor level.
5	I-Mark Slice Level	Manually set the I-mark sensor slice level.

Auto-calibration

Printing > Advanced > Calibrate > Auto-calibration

Perform the auto-calibration for the selected media sensor.
Auto-calibration is not available if you have installed the optional linerless kit (CL4NX only).

- **Gap + I-Mark**: Perform the adjustment for both the Gap sensor and I-mark sensor.
- **Gap**: Perform the adjustment for the Gap sensor.
- **I-Mark**: Perform the adjustment for the I-mark sensor.

Procedure:

1. Pass the media below the media sensor guide. If you are using labels, remove the label from the liner. Align it so that the media sensor does not sense the I-mark (black mark).
2. Close the print head. To get the correct adjustment result, adjust after you have closed the print head.
3. Press the ▲/▼ buttons to select the type of sensor to be adjusted.
4. Press the right soft button or ↵ button to start the sensor adjustment.
5. The sensor adjustment result shows. To exit the adjustment, press the right soft button.
6. Set to offline mode. Press the right soft button to confirm that the media feeds correctly.

Note
If the media does not feed correctly after **Auto-calibration**, contact your SATO reseller or technical support center.

GAP Levels

Printing > Advanced > Calibrate > GAP Levels

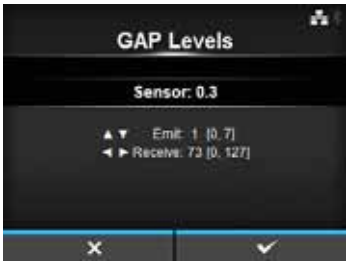

Manually set the Gap sensor level.

The setting procedure is as follows:

First, adjust the “Low” level (voltage) of the Gap sensor.

1. Remove the label from the liner.
2. Pass the liner through the media sensor. Align it so that the media sensor does not sense the I-mark (black mark).
3. Close the print head. To get the correct adjustment result, adjust after you have closed the print head.
4. Select the **GAP Levels** in the **Calibrate** menu and press the ↵ button.
5. Press the ▲/▼ buttons to change the **Emit** value until the **Sensor** value is below 0.5 (V). Set the **Emit** value as low as possible.
6. If the **Sensor** value does not decrease below 0.5 after you changed the **Emit** value, press the ◀/▶ buttons to change the **Receive** value.
7. Take a note of the **Sensor** value from the above procedure. This is the “Low” level value for the Gap sensor.

Next, check the “High” level (voltage) of the Gap sensor as follows:

8. Pass the media (attached with liner) between the media sensors. Align it so that the media sensor does not sense the I-mark (black mark).
9. Close the print head.
10. Check the **Sensor** value.
    If the value is 1.0 (V) higher than the “Low” level value you have recorded, then this is the “High” level value for the Gap sensor.
    If the difference between the “High” and the “Low” levels is less than 1.0, adjust the **Emit** and **Receive** values so that the difference is more than 1.0, or perform the adjustments again from step 1.
11. The standard values for the “High” and “Low” levels for the Gap sensor are as follows:
    - Low (with only liner) ≤ 0.5 (V)
    - High (media attached with liner) - Low ≥ 1.0 (V)
12. If both “High” and “Low” levels comply with the standard value, press the right soft button to confirm the value.

GAP Slice Level

Printing > Advanced > Calibrate > GAP Slice Level

Set the Gap sensor slice level.
The setting procedure is as follows:

1. Use the following formula to calculate the slice level.
   [(High level - Low level) x 0.3 + Low level = slice level]
2. Select the **GAP Slice Level** in the **Calibrate** menu and press the ↵ button.
3. Press the ▲/▼ buttons to change the **Slice level** value. Set the **Slice level** to the level calculated in step 1.
4. Press the right soft button to confirm the value.

Note
If you set the **Slice Level** to 0.0 (V), the printer sets the slice level automatically.

I-Mark Levels

Printing > Advanced > Calibrate > I-Mark Levels

Manually set the I-mark sensor level.

The setting procedure is as follows:

1. First, adjust the “Low” level (voltage) of the I-mark sensor.
2. Pass the media (attached with liner) between the media sensors. Align it so that the media sensor does not sense the I-mark (black mark).
3. Close the print head. To get the correct adjustment result, adjust after you have closed the print head.
4. Select the **I-Mark Levels** in the **Calibrate** menu and press the ↵ button.
5. Press the ▲/▼ buttons to change the **Emit** value until the **Sensor** value is below 0.5 (V). Set the **Emit** value as low as possible.
6. If the **Sensor** value does not decrease below 0.5 after you changed the **Emit** value, press the ◀/▶ buttons to change the **Receive** value.
7. Take a note of the **Sensor** value from the above procedure. This is the “Low” level value for the I-mark sensor.

Next, check the “High” level (voltage) of the I-mark sensor as follows:

8. Pass the media between the media sensors so that the media sensor can sense the I-mark (black mark).
9. Close the print head.
10. Check the **Sensor** value.
    If the value is 1.0 (V) higher than the “Low” level value you have recorded, then this is the “High” level value for the I-mark sensor.
    If the difference between the “High” and the “Low” levels is less than 1.0, adjust the **Emit** and **Receive** values so that the difference is more than 1.0, or perform the adjustments again from step 1.
11. The standard values for the “High” and “Low” levels for the I-mark sensor are as follows:
    - Low (without I-mark) ≤ 0.5 (V)
    - High (with I-mark) - Low ≥ 1.0 (V)
12. If both “High” and “Low” levels comply with the standard value, press the right soft button to confirm the value.

I-Mark Slice Level

Printing > Advanced > Calibrate > I-Mark Slice Level

Set the I-mark sensor slice level.
The setting procedure is as follows:

1. Use the following formula to calculate the slice level.
   [(High level - Low level) x 0.7 + Low level = slice level]
2. Select the **I-Mark Slice Level** in the **Calibrate** menu and press the ↵ button.
3. Press the ▲/▼ buttons to change the **Slice level** value. Set the **Slice level** to the slice level calculated in step 1.
4. Press the right soft button to confirm the value.

Note
If you set the **Slice Level** to 0.0 (V), the printer sets the level automatically.

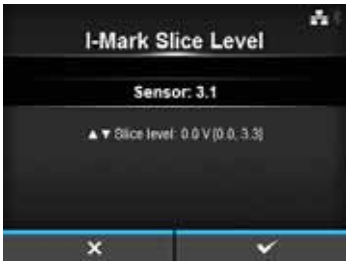

Head Check

Printing > Advanced > Head Check

Automatically check if there is a filament disconnection of the print head.
The options are as follows:

- **Off**: Head Check disabled.
- **All**: Check the entire print area.
- **Barcode**: Check only the area for printing a barcode. Head check is not applicable for barcodes printed as graphic data.

CAUTION
Head check is a reference for checking for a filament disconnection of the print head. This function does not guarantee barcode readability.

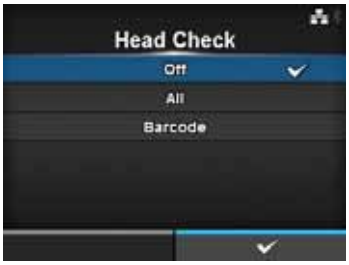

Head Check Mode

Printing > Advanced > Head Check Mode

Set the method for head check.
Shows only if you have selected **All** or **Barcode** in the **Head Check** menu.
The options are as follows:

- **Always**: Perform the head check for every item.
- **After Batch**: The head check occurs before starting to print and when printing is stopped. If backfeed is applicable, the head check occurs before starting to print, when stopping to print and during the backfeed.
- **Every Page**: Perform the head check for each specified number of media.

Every Page

Printing > Advanced > Every Page

Specify the number of media between each head check.
Shows only if you have selected **Every Page** in the **Head Check Mode** menu.
The setting range is from 1 to 999999.

Check Media Size

Printing > Advanced > Check Media Size

Enable or disable media size check.
Media size check is a function to detect a **Media error** when you load a media with a length longer than the media size specified by command, or if you have specified print data larger than the loaded media length.
Shows only if you have selected **Gap** or **I-Mark** in the **Sensor Type** menu.
The options are as follows:

- **Enabled**: Enable media size check.
- **Disabled**: Disable media size check.

Adjustments

Printing > Advanced > Adjustments

Correct the offset position, print position and print darkness.
The setting items are as follows:

1	Offset	Correct the offset position.
2	Pitch	Offset the print position in the vertical direction.
3	Darkness Adjust	Fine tune the print darkness.

Offset

Printing > Advanced > Adjustments > Offset

Correct the offset position.
Offset position refers to the tear-off position, cut position and dispense stop position.
Set the offset value '+' to move the stop position opposite the feed direction and value '-' to move the stop position in the feed direction.
The setting range is as follows:
The setting range varies depending on the print resolution of the printer.

<CL4NX>
- 203 dpi: -30 to 0 to 30 dots
- 305 dpi: -45 to 0 to 45 dots
- 609 dpi: -90 to 0 to 90 dots

<CL6NX>
- 203 dpi: -30 to 0 to 30 dots
- 305 dpi: -45 to 0 to 45 dots

Pitch

Printing > Advanced > Adjustments > Pitch

Offset the print position in the vertical direction.
Set the offset value '+' to move the print position opposite the feed direction and value '-' to move the print position in the feed direction.
The setting range is as follows:
The setting range varies depending on the print resolution of the printer.

<CL4NX>
- 203 dpi: -30 to 0 to 30 dots
- 305 dpi: -45 to 0 to 45 dots
- 609 dpi: -90 to 0 to 90 dots

<CL6NX>
- 203 dpi: -30 to 0 to 30 dots
- 305 dpi: -45 to 0 to 45 dots

Darkness Adjust

Printing > Advanced > Adjustments > Darkness Adjust

Fine tune the print darkness.
The setting range is from 0 to 99.
0 is the lightest and 99 is the darkest.

Refer to **Darkness** in *Printing > Darkness*.

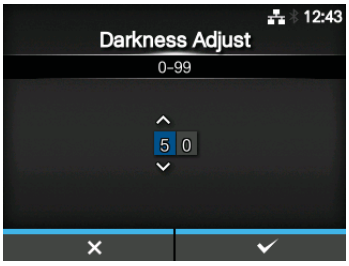

Start Online

Printing > Advanced > Start Online

Select default mode at power on.
The options are as follows:

- **Enabled**: The printer powers on in online mode.
- **Disabled**: The printer powers on in offline mode.

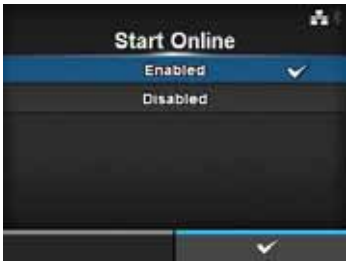

Feed After Error

Printing > Advanced > Feed After Error

Automatically feeds the media when recovering from an error and changing to online mode.
The options are as follows:

- **Enabled**: Feed the media when changing to online mode after recovering from an error.
- **Disabled**: Do not feed the media when changing to online mode after recovering from an error.

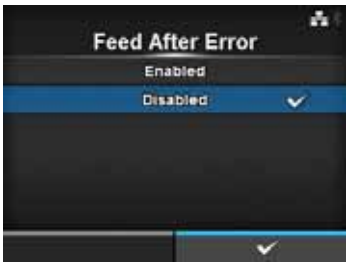

Feed At Power On

Printing > Advanced > Feed At Power On

Automatically feeds the media at power on.
The options are as follows:

- **Enabled**: Feed the media when the printer is powered on.
- **Disabled**: Do not feed the media when the printer is powered on.

Max Feed

Printing > Advanced > Max Feed

Set the media feed amount for Tear-off, cut and dispense stop.
Set the media feed amount based on the print head position of 0.
The actual media feed amount is the value of **Offset** + **Max Feed**.
The setting range is as follows:
The setting range varies depending on the print resolution of the printer.

<CL4NX>
- 203 dpi: 0 to 2040 dots
- 305 dpi: 0 to 3060 dots
- 609 dpi: 0 to 6120 dots

<CL6NX>
- 203 dpi: 0 to 2040 dots
- 305 dpi: 0 to 3060 dots

Paper End

Printing > Advanced > Paper End

Select the sensor for sensing the paper end.
The options are as follows:
- **Using I-mark**: Use the I-mark sensor (reflective type) to sense the paper end.
- **Using Gap**: Use the Gap sensor (transmissive type) to sense the paper end.

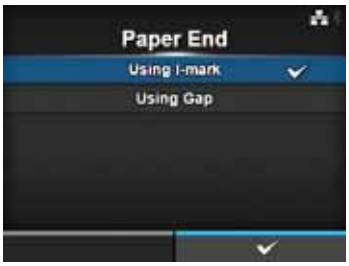

Head Base Position

Printing > Advanced > Head Base Position

Set the position used for the base reference point for printing.
The options are as follows:
- **Standard**: Print with a standard base reference point.
- **Left-justify**: Move the base reference point 2 mm (0.08”) to the left (when you face the printer).

Note
The display of SBPL or other protocols in online/offline mode will change to red color if you have made any changes. In such a case, power on the printer again to make the setting effective.

Prioritize

Printing > Advanced > Prioritize

For printer configuration, set whether to prioritize the setting through the printer or prioritize the setting through the command.
The options are as follows:

- **Commands**: Prioritize the setting through the command.
- **Settings**: Prioritize the setting through the printer.

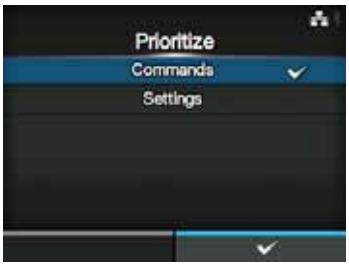

Reprint

Printing > Advanced > Reprint

Enable or disable the reprint function.
The options are as follows:

- **Enabled**: Enable the reprint function.
- **Disabled**: Disable the reprint function.

If you have selected **Enabled** in **Reprint**, you can press the right soft button (Reprint) on the online screen to print the previous data again.

Note
The previous data will be lost if you power off the printer.

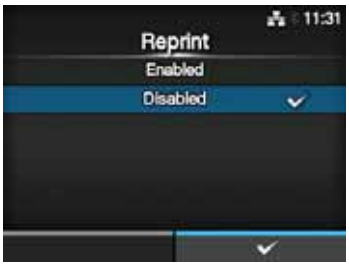

Print End Position

Printing > Advanced > Print End Position

Adjust the media stop position or cut position when the sensor type is set to **None**. This adjustment also sets the blank amount from the media stop position.
The setting range is as follows:
The setting range varies depending on the print resolution of the printer.

<CL4NX>

- 203 dpi: 0 to 20000 dots
- 305 dpi: 0 to 18000 dots
- 609 dpi: 0 to 9600 dots

<CL6NX>

- 203 dpi: 0 to 20000 dots
- 305 dpi: 0 to 18000 dots

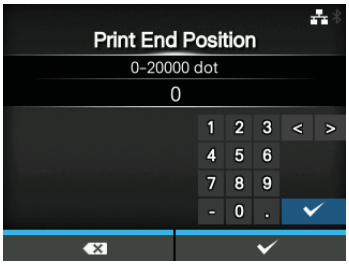

4.4.2 Interface Menu

In the **Interface** menu, the setting items are as follows:

Interface		
1	Network	Set the LAN connection and wireless LAN connection.
2	IEEE1284	Set the IEEE1284 connection.
3	RS-232C	Set the RS-232C connection.
4	USB	Set the USB connection.
5	Bluetooth	Set the Bluetooth connection.
6	Ignore CR/LF	Set to ignore CR/LF codes.
7	Ignore CAN/DLE	Set to ignore CAN/DLE codes.
8	External I/O	Set the external signal (EXT).
9	RFID (CL4NX only)	Set the RFID. *Shows only for RFID models.

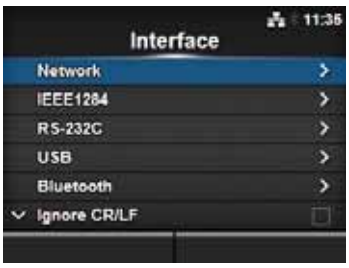

⚠ CAUTION

Do not change the setting in the **Interface** menu if there are print jobs remaining in the printer's memory. Complete the print job or cancel the print job before you change the setting.

Network		
Interface > Network To use LAN and wireless LAN for the interface between the host and the printer. The setting items are as follows:		
1	Settings	Set the LAN, wireless LAN or select the interface.
2	Services	Set the port for connection, NTP, LPD, FTP or SNMP.
3	Advanced	Set the advanced function for the interface.

Settings

Interface > Network > Settings

Set the LAN, wireless LAN or select the interface.
The setting items are as follows:

1	LAN	Set the LAN.
2	Wi-Fi	Set the wireless LAN. *Shows only if you have installed the optional wireless LAN.
3	Interface	Select the network interface.

CAUTION
You cannot use LAN and wireless LAN at the same time. The wireless LAN function is available only if you have installed the wireless LAN.

LAN

Interface > Network > Settings> LAN

Set the IPv4, IPv6 or proxy for the LAN.
The setting items are as follows:

1	IPv4	Set the IPv4 for the LAN.
2	IPv6	Set the IPv6 for the LAN.
3	Proxy	Set the proxy for the LAN.

IPv4

Interface > Network > Settings> LAN > IPv4

Set IPv4 for the LAN. The setting items are as follows:

1	Mode	Select the IP address assignment method.
2	DHCP / Renew Lease	Update the lease time and get the IP address from the DHCP server again. *Shows only if you have selected **DHCP** in the **Mode** menu and LAN is the active interface. *Does not show if WLAN is the active interface.
3	IP Address	Set and check the IP address. If you have selected **DHCP** in the **Mode** menu, the screen shows the IP address you received from the DHCP server. If you have selected **Static** in the **Mode** menu, select to set the IP address.
4	Netmask	Set and check the subnet mask address. If you have selected **DHCP** in the **Mode** menu, the screen shows the subnet mask address you received from the DHCP server. If you have selected **Static** in the **Mode** menu, select to set the subnet mask address.
5	Gateway	Set and check the default gateway address. If you have selected **DHCP** in the **Mode** menu, the screen shows the gateway address you received from the DHCP server. If you have selected **Static** in the **Mode** menu, select to set the default gateway address.
6	DNS	Set and check DNS server addresses. If you have selected **Static** in the **Mode** menu, select to set and check DNS server addresses.

CAUTION
After setting, press the right soft button to enable the new setting. Press the left soft button to cancel the new setting and return to the previous setting.

Note
You cannot change IP Address, Netmask, Gateway and DNS if Mode is DHCP.

Mode

Interface > Network > Settings > LAN > IPv4 > Mode

Select the IP address assignment method.
The options are as follows:

- **DHCP**: Automatically retrieve the IP address, gateway and subnet mask from the DHCP server.
- **Static**: Manually set the IP address, gateway and subnet mask.

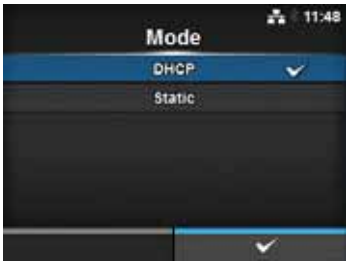

IP Address

Interface > Network > Settings > LAN > IPv4 > IP Address

If you have selected **Static** in the **Mode** menu, set the IP address.
The setting range is as follows:
000.000.000.001 to 255.255.255.255

Netmask

Interface > Network > Settings > LAN > IPv4 > Netmask

If you have selected **Static** in the **Mode** menu, set the subnet mask address.
Each group of the address can be set cyclically among 0, 128, 192, 224, 240, 248, 252, 254 and 255.
The setting range is as follows:
128.000.000.000 to 255.255.255.254

Gateway

Interface > Network > Settings > LAN > IPv4 > Gateway

If you have selected **Static** in the **Mode** menu, set the default gateway address.
The setting range is as follows:
000.000.000.000 to 255.255.255.255

DNS

Interface > Network > Settings > LAN > IPv4 > DNS

If you have selected **Static** in the **Mode** menu, set and check DNS server addresses.
The setting range is as follows:
000.000.000.000 to 255.255.255.255

Note
You can register up to three IP addresses for the DNS server. Use a comma to delimit different IP addresses.

IPv6

Interface > Network > Settings > LAN > IPv6

Set IPv6 for the LAN. The setting items are as follows:

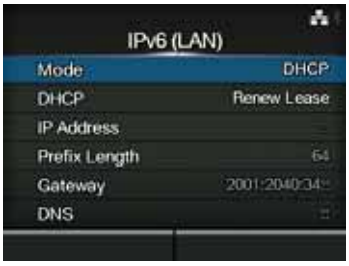

1	Mode	Select the IP address assignment method.
2	DHCP / Renew Lease	Update the lease time and get the IP address from the DHCP server again. *Shows only if you have selected **DHCP** in the **Mode** menu. *Does not show if WLAN is the active interface.
3	IP Address	Set and check the IP address. If you have selected **DHCP** in the **Mode** menu, the screen shows the IP address you received from the DHCP server. If you have selected **Static** in the **Mode** menu, select to set the IP address.
4	Prefix Length	Set and check the prefix.
5	Gateway	Set and check the default gateway address. If you have selected **DHCP** in the **Mode** menu, the screen shows the gateway address you received from the DHCP server. If you have selected **Static** in the **Mode** menu, select to set the default gateway address.
6	DNS	Set and check the address of the primary DNS server. If you have selected **Static** in the **Mode** menu, select to set the primary address of the DNS server.

CAUTION
After setting, press the right soft button to enable the new setting. Press the left soft button to cancel the new setting and return to the previous setting.

Note
You cannot change IP Address, Prefix Length, Gateway and DNS if Mode is DHCP or Auto.

Mode

Interface > Network > Settings > LAN > IPv6 > Mode

Select the IP address assignment method.
The options are as follows:

- **Auto**: Automatically generate the IP address and gateway (stateless mode).
- **DHCP**: Automatically retrieve the IP address and gateway from the DHCP server automatically (stateful mode).
- **Static**: Manually set the IP address, gateway and subnet mask.

IP Address

Interface > Network > Settings > LAN > IPv6 > IP Address

If you have selected **Static** in the **Mode** menu, set the IP address.
The setting range is as follows:
0:0:0:0:0:0:0:1 to ffff:ffff:ffff:ffff:ffff:ffff:ffff:ffff

Prefix Length

Interface > Network > Settings > LAN > IPv6 > Prefix Length

If you have selected **Static** in the **Mode** menu, set the prefix.
The setting range is from 1 to 128.

Gateway

Interface > Network > Settings > LAN > IPv6 > Gateway

If you have selected **Static** in the **Mode** menu, set the default gateway address.
The setting range is as follows:
0:0:0:0:0:0:0:0 to ffff:ffff:ffff:ffff:ffff:ffff:ffff:ffff

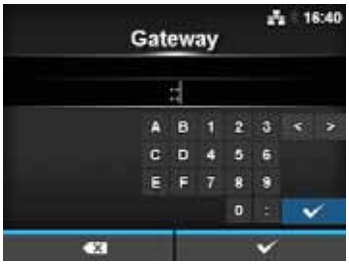

DNS

Interface > Network > Settings > LAN > IPv6 > DNS

If you have selected **Static** in the **Mode** menu, set the primary address of the DNS server.
The setting range is as follows:
0:0:0:0:0:0:0:0 to ffff:ffff:ffff:ffff:ffff:ffff:ffff:ffff

Note
You can register only one IP address for the DNS server for IPv6.

Proxy

Interface > Network > Settings > LAN > Proxy

Set the proxy for the LAN. The setting items are as follows:

1	Enabled	Enable or disable use of proxy.
2	Server	Set the proxy server address.
3	Exclude	Exclude the proxy from usage.

Enabled

Interface > Network > Settings > LAN > Proxy > Enabled

Enable or disable use of proxy.
The options are as follows:
- **Enabled**: Enable proxy server usage.
- **Disabled**: Disable proxy server usage.

Note
To enable the proxy, Server should be set and Exclude must contain at least 127.0.0.1 and localhost.

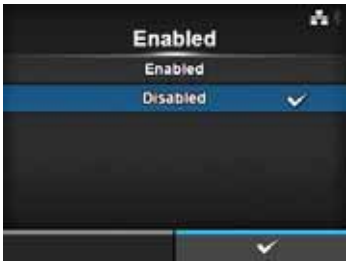

Server

Interface > Network > Settings > LAN > Proxy > Server

Set the name or IP address of the proxy server.

Note
Server should be set with a valid name or IP address and port number.

Exclude

Interface > Network > Settings > LAN > Proxy > Exclude

Set names, IP addresses or domains for proxy exclude.

Note
Exclude must contain at least 127.0.0.1 and localhost.

Wi-Fi

Interface > Network > Settings > Wi-Fi

Set the wireless LAN.
Shows only if you have installed the optional wireless LAN.
The setting items are as follows:

1	IPv4	Set the IPv4 for the Wi-Fi.
2	IPv6	Set the IPv6 for the Wi-Fi.
3	Proxy	Set the proxy for the Wi-Fi.
4	Wi-Fi Protected Setup	Set the wireless LAN connection with the WPS function.
5	Wi-Fi Direct	Set the Wi-Fi Direct function. *Enabled only if you have selected **Infrastructure** in the **Mode** menu.
6	SSID	Set the SSID.
7	Hidden SSID	Set the Hidden SSID.
8	Mode	Set the communication mode.
9	Channel	Set the communication channel.
10	Security	Set the security (encryption method).
11	WEP Conf.	Set the WEP key. *Shows only if you have selected **WEP** in the **Security** menu.
12	WPA Conf.	Set the WPA authentication. *Shows only if you have selected **WPA+WPA2** or **WPA2** in the **Security** menu.
13	EAP Conf.	Set the EAP authentication. *Shows only if you have selected **Dynamic WEP** in the **Security** menu.

Note
When Wi-Fi Direct is active, only IPv6 is not shown on the screen.

IPv4

Interface > *Network* > *Settings*> *Wi-Fi* > *IPv4*

Set IPv4 for the *Wi-Fi*. The setting items are as follows:

1	Mode	Select the IP address assignment method.
2	DHCP / Renew Lease	Update the lease time and get the IP address from the DHCP server again. *Shows only if you have selected **DHCP** in the **Mode** menu. *Does not show if LAN is the active interface.
3	IP Address	Set and check the IP address. If you have selected **DHCP** in the **Mode** menu, the screen shows the IP address you received from the DHCP server. If you have selected **Static** in the **Mode** menu, select to set the IP address.
4	Netmask	Set and check the subnet mask address. If you have selected **DHCP** in the **Mode** menu, the screen shows the subnet mask address you received from the DHCP server. If you have selected **Static** in the **Mode** menu, select to set the subnet mask address.
5	Gateway	Set and check the default gateway address. If you have selected **DHCP** in the **Mode** menu, the screen shows the gateway address you received from the DHCP server. If you have selected **Static** in the **Mode** menu, select to set the default gateway address.
6	DNS	Set and check DNS server addresses. If you have selected **Static** in the **Mode** menu, select to set and check DNS server addresses.

CAUTION
After setting, press the right soft button to enable the new setting. Press the left soft button to cancel the new setting and return to the previous setting.

Note
When Wi-Fi Direct is active, Mode, DHCP and DNS are not shown. In addition, you cannot change IP Address, Netmask and Gateway if Mode is DHCP or Wi-Fi Direct is active. DNS cannot be changed if Mode is DHCP.

Mode

Interface > Network > Settings > Wi-Fi > IPv4 > Mode

Select the IP address assignment method.
The options are as follows:

- **DHCP**: Automatically retrieve the IP address, gateway and subnet mask from the DHCP server.
- **Static**: Manually set the IP address, gateway and subnet mask.

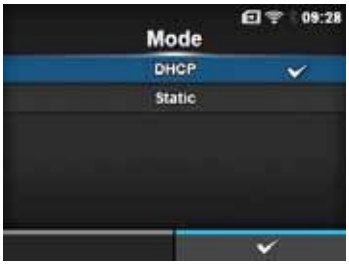

IP Address

Interface > Network > Settings > Wi-Fi > IPv4 > IP Address

If you have selected **Static** in the **Mode** menu, set the IP address.
The setting range is as follows:
000.000.000.001 to 255.255.255.255

Netmask

Interface > Network > Settings > Wi-Fi > IPv4 > Netmask

If you have selected **Static** in the **Mode** menu, set the subnet mask address.
Each group of the address can be set cyclically among 0, 128, 192, 224, 240, 248, 252, 254 and 255.
The setting range is as follows:
128.000.000.000 to 255.255.255.254

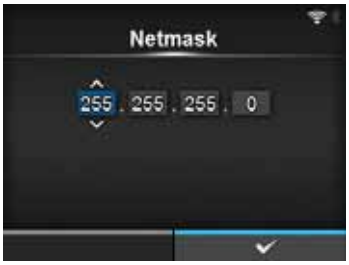

Gateway

Interface > Network > Settings > Wi-Fi > IPv4 > Gateway

If you have selected **Static** in the **Mode** menu, set the default gateway address.
The setting range is as follows:
000.000.000.000 to 255.255.255.255

DNS

Interface > Network > Settings > Wi-Fi > IPv4 > DNS

If you have selected **Static** in the **Mode** menu, set and check DNS server addresses.
The setting range is as follows:
000.000.000.000 to 255.255.255.255

Note
You can register up to three IP addresses for the DNS server. Use a comma to delimit different IP addresses.

IPv6

Interface > Network > Settings > Wi-Fi > IPv6

Set IPv6 for the Wi-Fi. The setting items are as follows:

1	Mode	Select the IP address assignment method.
2	DHCP / Renew Lease	Update the lease time and get the IP address from the DHCP server again. *Shows only if you have selected **DHCP** in the **Mode** menu. *Does not show if LAN is the active interface.
3	IP Address	Set and check the IP address. If you have selected **DHCP** in the **Mode** menu, the screen shows the IP address you received from the DHCP server. If you have selected **Static** in the **Mode** menu, select to set the IP address.
4	Prefix Length	Set and check the prefix.
5	Gateway	Set and check the default gateway address. If you have selected **DHCP** in the **Mode** menu, the screen shows the gateway address you received from the DHCP server. If you have selected **Static** in the **Mode** menu, select to set the default gateway address.
6	DNS	Set and check the address of the primary DNS server. If you have selected **Static** in the **Mode** menu, select to set the primary address of the DNS server.

CAUTION
After setting, press the right soft button to enable the new setting. Press the left soft button to cancel the new setting and return to the previous setting.

Note
When Wi-Fi Direct is active, this IPv6 screen is not shown. In addition, you cannot change IP Address, Prefix Length, Gateway and DNS if Mode is DHCP or Auto.

Mode

Interface > Network > Settings > Wi-Fi > IPv6 > Mode

Select the IP address assignment method.
The options are as follows:

- **Auto**: Automatically generate the IP address and gateway (stateless mode).
- **DHCP**: Automatically retrieve the IP address and gateway from the DHCP server automatically (stateful mode).
- **Static**: Manually set the IP address, gateway and subnet mask.

IP Address

Interface > Network > Settings > Wi-Fi > IPv6 > IP Address

If you have selected **Static** in the **Mode** menu, set the IP address.
The setting range is as follows:
0:0:0:0:0:0:0:1 to ffff:ffff:ffff:ffff:ffff:ffff:ffff:ffff

Prefix Length

Interface > Network > Settings > Wi-Fi > IPv6 > Prefix Length

If you have selected **Static** in the **Mode** menu, set the prefix.
The setting range is from 1 to 128.

Gateway

Interface > Network > Settings > Wi-Fi > IPv6 > Gateway

If you have selected **Static** in the **Mode** menu, set the default gateway address.
The setting range is as follows:
0:0:0:0:0:0:0:0 to ffff:ffff:ffff:ffff:ffff:ffff:ffff:ffff

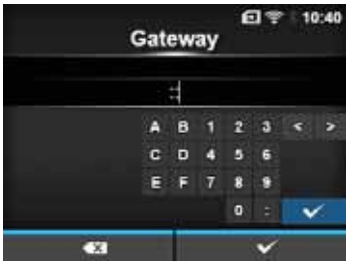

DNS

Interface > Network > Settings > Wi-Fi > IPv6 > DNS

If you have selected **Static** in the **Mode** menu, set the primary address of the DNS server.
The setting range is as follows:
0:0:0:0:0:0:0:0 to ffff:ffff:ffff:ffff:ffff:ffff:ffff:ffff

Note
You can register only one IP address for the DNS server for IPv6.

Proxy

Interface > Network > Settings > Wi-Fi > Proxy

Set the proxy for the Wi-Fi. The setting items are as follows:

1	Enabled	Enable or disable use of proxy.
2	Server	Set the proxy server address.
3	Exclude	Exclude the proxy server usage.

Enabled

Interface > Network > Settings > Wi-Fi > Proxy > Enabled

Enable or disable use of proxy.
The options are as follows:
- **Enabled**: Enable proxy server usage.
- **Disabled**: Disable proxy server usage.

Note
To enable the proxy, Server should be set and Exclude must contain at least 127.0.0.1 and localhost.

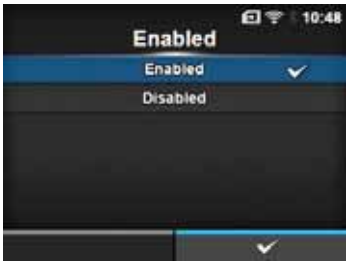

Server

Interface > Network > Settings > Wi-Fi > Proxy > Server

Set the name or IP address of the proxy server.

Note
Server should be set with a valid name or IP address and port number.

Exclude

Interface > Network > Settings > Wi-Fi > Proxy > Exclude

Set names, IP addresses or domains for proxy exclude.

Note
Exclude must contain at least 127.0.0.1 and localhost.

Wi-Fi Protected Setup

Interface > Network > Settings > Wi-Fi > Wi-Fi Protected Setup

Set the wireless LAN connection using the push button or PIN code method.
The setting items are as follows:

1	Button (PBC)	Set the wireless LAN connection using the push button method.
2	PIN	Set the wireless LAN connection using the PIN code method.

Note
- Refer to the manual of the access point device for its operation.
- This screen does not show if LAN or Wi-Fi Direct is active.

Button (PBC)

Interface > Network > Settings > Wi-Fi > Wi-Fi Protected Setup> Button (PBC)

Set the wireless LAN connection using the push button method.

1. Select **Button (PBC)** in the **Wi-Fi Protected Setup** menu and press the ↵ button.
2. When **Scanning…** shows on the screen, press the **WPS** button on the access point of the wireless LAN device.
3. When the connection to the access point is established, **Successfully configured** shows on the screen.

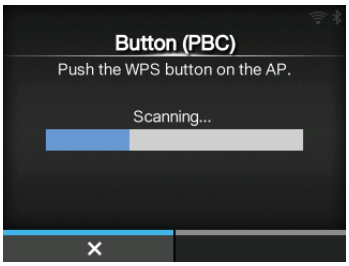

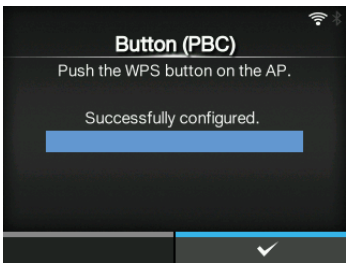

PIN

Interface > Network > Settings > Wi-Fi > Wi-Fi Protected Setup> PIN

Set the wireless LAN connection using the PIN code method.

1. Select **PIN** in the **Wi-Fi Protected Setup** menu and press the ↵ button.
2. When **Scanning…** shows on the screen, set the PIN code shown on the screen to the access point of the wireless LAN or computer.
3. When the connection to the access point is established, **Successfully configured** shows on the screen.

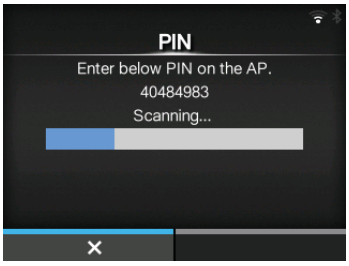

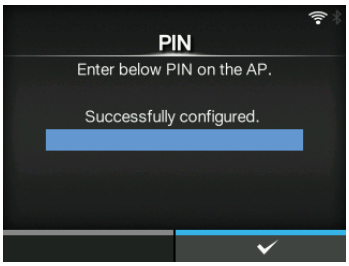

Wi-Fi Direct

Interface > Network > Settings > Wi-Fi > Wi-Fi Direct

Set the Wi-Fi Direct function.
*The Wi-Fi Direct function is enabled only if you have selected **Infrastructure** in the **Mode** menu.

The setting procedure is as follows:

1. Set the device name for the printer using **Device Name**. You can enter 1 to 32 characters including alphabets (capital and small letters), numbers and symbols. Press the ↩ button to return to **Wi-Fi** menu and press the right soft button to enable changes.
2. Select **Connect** to search and show the connectable device names or to accept connection requests when printer is GO (Group Owner).

   Select the device name you want to connect using the ▲/▼ buttons, then press the right soft button.
3. Select **Start Group** if you want to start a new persistent group or select a group from the list.
4. Select **Remove Group** to remove the persistent group in step 3.
5. Complete the connection according to the display on the printer or device you want to connect.
6. Select **Disconnect** if you want to stop the connection.

Note
You can connect a maximum of ten devices.
When Wi-Fi Direct is active, **Device Name** cannot be changed.
Start Group and **Remove Group** show only if Wi-Fi is active and the printer is not connected to a Wi-Fi Direct network.
Disconnect shows if Wi-Fi is active and the printer is connected.
After setting up a start group, the printer will be set to GO (Group Owner) and will wait for a connection request from another device.
If the printer is powered off during a persistent group connection, the group will be started automatically after the printer is powered on.

Connect without group

Connect with group

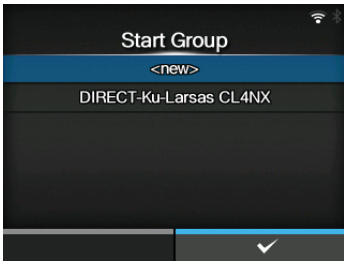

SSID

Interface > Network > Settings > Wi-Fi > SSID

Set the SSID.
The screen shows the Wi-Fi network detected by the printer.
Select the name of the Wi-Fi network you want to connect using the ▲/▼ buttons and press the right soft button to confirm.
To register a Wi-Fi network manually, press the left soft button and enter the name of the network.
You can enter a maximum of thirty-two characters including alphabet (upper case and lower case), numbers and symbols.

Note
SSID is editable if LAN or Wi-Fi Direct is active.

Hidden SSID

Interface > Network > Settings > Wi-Fi > Hidden SSID

Set the Hidden SSID (stealth function).
Shows if you have selected **Infrastructure** in the **Mode** menu.
The options are as follows:

- **Enabled**
- **Disabled**

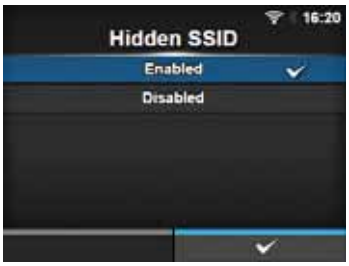

Mode

Interface > Network > Settings > Wi-Fi > Mode

Set the communication method of the wireless LAN.
The options are as follows:

- **Infrastructure**
- **Ad-hoc**

Channel

Interface > Network > Settings > Wi-Fi > Channel

Set the communication channel.
Channel can be set only if you have selected **Ad-hoc** in the **Mode** menu.
The number of channels you can set varies depending on the region of the printer.

Security

Interface > Network > Settings > Wi-Fi > Security

Set the security method of the network. Set the security methods so that the printer, host and network devices match.
The options are as follows:

- **None**
- **WEP**
- **WPA+WPA2**
- **WPA2**
- **Dynamic WEP**

If you have selected **Ad-hoc** in the **Mode** menu, only **None** and **WEP** will be available in the **Security** menu.

WEP Conf.

Interface > Network > Settings > Wi-Fi > WEP Conf.

Set the WEP key.
Shows only if you have selected **WEP** in the **Security** menu.
The setting items are as follows:

1	Authentication	Set the WEP authentication method.
2	Key Index	Set the key index.
3	Key #1 - Key #4	Set the WEP key1 - key4.

Authentication

Interface > Network > Settings > Wi-Fi > WEP Conf. > Authentication

Set the WEP authentication method.
The options are as follows:

- **Open System**
- **Shared Key**

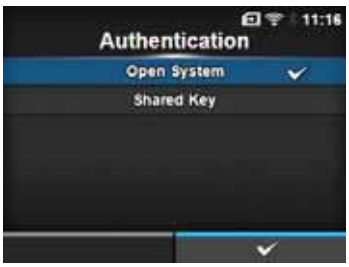

Key Index

Interface > Network > Settings > Wi-Fi > WEP Conf. > Key Index

Set the key index.
Set the key index (WEP key) according to the access point of the wireless LAN you connect.
The setting range is from 1 to 4.

CAUTION
Depending on the product, the range of the key index may be 0 to 3. In such a case, if you have set the printer to **1**, then set the product to **0**.

Key #1 - Key #4

Interface > Network > Settings > Wi-Fi > WEP Conf. > Key #1 - Key #4

Set the WEP key #1 - key #4.
You can enter alphabet (upper case and lower case) and numbers.
Depending on the length of the WEP key, the number of characters you can set is as follows:

- When the key length is 64 bit
  ASCII: Five characters
  Hexadecimal: Ten characters
- When the key length is 128 bit
  ASCII: Thirteen characters
  Hexadecimal: Twenty-six characters

WPA Conf.

Interface > Network > Settings > Wi-Fi > WPA Conf.

Set the WPA authentication.
Shows only if you have selected **WPA+WPA2** or **WPA2** in the **Security** menu.
The setting items are as follows:

1	WPA Authentication	Set the WPA authentication method.
2	PSK	Set the PSK shared key. *Shows only if you have selected **Personal (PSK)** in the **WPA Authentication** menu.
3	EAP Conf.	Set the functions for EAP. *Shows only if you have selected items other than **Personal (PSK)** in the **WPA Authentication** menu.

WPA Authentication

Interface > Network > Settings > Wi-Fi > WPA Conf. > WPA Authentication

Set the WPA authentication method.
The options are as follows:

- **Personal (PSK)**
- **Enterprise (802.1x)**
- **CCKM**

PSK

Interface > Network > Settings > Wi-Fi > WPA Conf. > PSK

Set the PSK shared key.
Shows only if you have selected **Personal (PSK)** in the **WPA Authentication** menu.
You can enter alphabetic, numeric and symbolic characters in the range of 8-63 ASCII or 64 hexadecimal digits.

EAP Conf.

Interface > Network > Settings > Wi-Fi > EAP Conf.

Interface > Network > Settings > Wi-Fi > WPA Conf. > EAP Conf.

Set the functions for EAP.
Shows only if you have selected an item other than **Personal (PSK)** in the **WPA Authentication** menu or if you have selected **Dynamic WEP** in the **Security** menu.
The setting items are as follows:

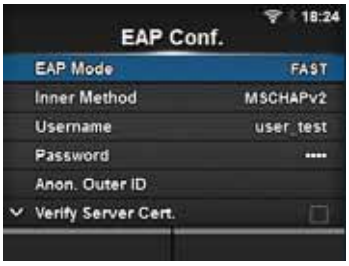

1	EAP Mode	Set the EAP Mode (authentication mode).
2	Inner Method	Set the inner method.
3	Username	Set the user name.
4	Password	Set the password.
5	Anon. Outer ID	Set the external ID. *Shows only if you have selected **FAST**, **PEAP** or **TTLS** in the **EAP Mode** menu.
6	Verify Server Cert.	Enable or disable server authentication. *Shows only if you have selected anything other than **LEAP** in the **EAP Mode** menu.
7	Private Key P/W	Set the Private Key password. *Shows only if you have selected **TLS** in either the **EAP Mode** menu or **Inner Method** menu.
8	PAC Auto Provisioning	Enable or disable PAC Auto Provisioning. *Shows only if you have selected **FAST** in the **EAP Mode** menu.
9	PAC P/W	Set the PAC password. *Shows only if you have selected **FAST** in the **EAP Mode** menu and if you have selected **Disabled** in **PAC Auto Provisioning**.

EAP Mode

Interface > Network > Settings > Wi-Fi > EAP Conf. > EAP Mode

Interface > Network > Settings > Wi-Fi > WPA Conf. > EAP Conf. > EAP Mode

Set the EAP Mode (authentication mode).
The options are as follows:

- **FAST**
- **LEAP**
- **PEAP**
- **TLS**
- **TTLS**

Inner Method

Interface > Network > Settings > Wi-Fi > EAP Conf. > Inner Method

Interface > Network > Settings > Wi-Fi > WPA Conf. > EAP Conf. > Inner Method

Set the inner method.
Shows only if you have selected **FAST**, **PEAP** or **TTLS** in the **EAP Mode** menu.

- If you have selected **FAST** in the **EAP Mode** menu, the options are **MSCHAPv2**, **GTC** and **TLS**.
- If you have selected **PEAP** in the **EAP Mode** menu, the options are **MSCHAPv2**, **GTC**, **MD5**, **OTP** and **TLS**.
- If you have selected **TTLS** in the **EAP Mode** menu, the options are **MSCHAPv2**, **MSCHAP**, **CHAP**, **PAP**, **EAP-GTC**, **EAP-MD5**, **EAP-MSCHAPv2**, **EAP-OTP** and **EAP-TLS**.

Username

Interface > Network > Settings > Wi-Fi > EAP Conf. > Username

Interface > Network > Settings > Wi-Fi > WPA Conf. > EAP Conf. > Username

Set the user name.
You can enter alphabetic, numeric and symbolic characters in the range of 0 to 63 characters.

Password

Interface > Network > Settings > Wi-Fi > EAP Conf. > Password

Interface > Network > Settings > Wi-Fi > WPA Conf. > EAP Conf. > Password

Set the password.
You can enter alphabetic, numeric and symbolic characters in the range of 0 to 32 characters.

Anon. Outer ID

Interface > Network > Settings > Wi-Fi > EAP Conf. > Anon. Outer ID

Interface > Network > Settings > Wi-Fi > WPA Conf. > EAP Conf. > Anon. Outer ID

Set the external ID.
Shows only if you have selected **FAST**, **PEAP** or **TTLS** in the **EAP Mode** menu.
You can enter alphabetic, numeric and symbolic characters in the range of 0 to 63 characters.

Verify Server Cert.

Interface > Network > Settings > Wi-Fi > EAP Conf. > Verify Server Cert.

Interface > Network > Settings > Wi-Fi > WPA Conf. > EAP Conf. > Verify Server Cert.

Enable or disable server certificate validation.
Shows only if you have selected anything other than **LEAP** in the **EAP Mode** menu.
The options are as follows:

- **Enabled**: Enable server certificate validation.
- **Disabled**: Disable server certificate validation.

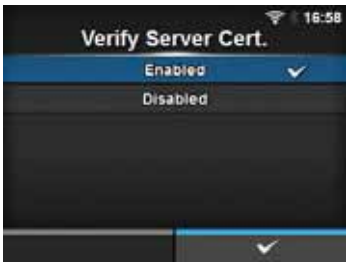

Private Key P/W

Interface > Network > Settings > Wi-Fi > EAP Conf. > Private Key P/W

Interface > Network > Settings > Wi-Fi > WPA Conf. > EAP Conf. > Private Key P/W

Set the Private Key password.
Shows only if you have selected **TLS** in either the **EAP Mode** menu or **Inner Method** menu.
You can enter alphabetic, numeric and symbolic characters in the range of 0 to 64 characters.

PAC Auto Provisioning

Interface > Network > Settings > Wi-Fi > EAP Conf. > PAC Auto Provisioning

Interface > Network > Settings > Wi-Fi > WPA Conf. > EAP Conf. > PAC Auto Provisioning

Enable or disable PAC Auto Provisioning.
Shows only if you have selected **FAST** in the **EAP Mode** menu.
The options are as follows:

- **Enabled**: Enable PAC Auto Provisioning.
- **Disabled**: Disable PAC Auto Provisioning.

PAC P/W

Interface > Network > Settings > Wi-Fi > EAP Conf. > PAC P/W

Interface > Network > Settings > Wi-Fi > WPA Conf. > EAP Conf. > PAC P/W

Set the PAC password.
Shows only if you have selected **FAST** in the **EAP Mode** menu and if you have selected **Disabled** in the **PAC Auto Provisioning**.
You can enter alphabetic, numeric and symbolic characters in the range of 0 to 64 characters.

Interface

Interface > Network > Settings > Interface

Select the network interface.
The options are as follows:

- **Auto**: Automatically select between LAN and wireless LAN interface at printer startup. LAN is selected if LAN cable is connected to a link established hub (Link LED is flashing) at printer startup. Wireless LAN is selected if LAN is not detected at printer startup.
- **LAN**: Use LAN interface (or Force LAN interface).
- **Wi-Fi**: Use wireless LAN interface (or Force wireless LAN interface).

Note
The display of SBPL or other protocols in online/offline mode will change to red color if you have made any changes. In such a case, power on the printer again to make the setting effective.

Services

Interface > Network > Services

Set the port for connection, NTP, LPD, FTP or SNMP.
The setting items are as follows:

1	Ports	Set the port number.
2	NTP	Set the functions for NTP.
3	LPD	Set the functions for LPD.
4	FTP	Set the functions for FTP.
5	SNMP	Set the functions for SNMP.

Ports

Interface > Network > Services > Ports

The setting items are as follows:

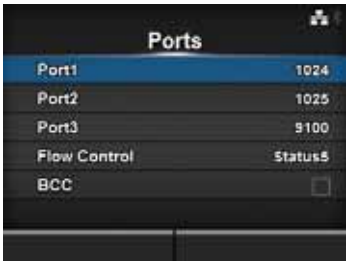

1	Port1	Set the port number.
2	Port2	Set the port number.
3	Port3	Set the port number.
4	Flow Control	Set the communication protocol.
5	BCC	Set the functions for BCC. *Shows only if you have selected **Status5** in the **Flow Control** menu.

Port1

Interface > Network > Services > Ports > Port1

Set the port number.
The setting range is from 1 to 65535.
Each port (1, 2 and 3) must be set to different values.

Port2

Interface > Network > Services > Ports > Port2

Set the port number.
The setting range is from 1 to 65535.
Each port (1, 2 and 3) must be set to different values.

Port3

Interface > Network > Services > Ports > Port3

Set the port number.
The setting range is from 1 to 65535.
Each port (1, 2 and 3) must be set to different values.

Flow Control

Interface > Network > Services > Ports > Flow Control

Set the communication protocol.
The options are as follows:

- **Status4**
- **Status4 ENQ**
- **Status3**
- **Status5**
- **None**

BCC

Interface > Network > Services > Ports > BCC

Enable or disable the functions for BCC.
Shows only if you have selected **Status5** in the **Flow Control** menu.
The options are as follows:

- **Enabled**: Enable the BCC check function.
- **Disabled**: Disable the BCC check function.

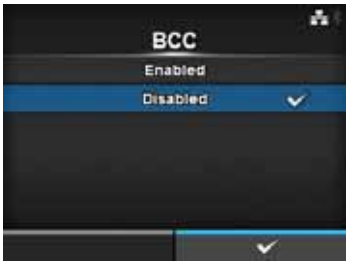

NTP

Interface > Network > Services > NTP

Set the functions for NTP.
The NTP function gets the time information from the NTP server through the network and sets the time of the printer.
The setting items are as follows:

1	Enable	Enable or disable the functions for NTP.
2	Error	Set to show the NTP error message if detected.
3	Time Server IP	Set the IP address of the NTP server.

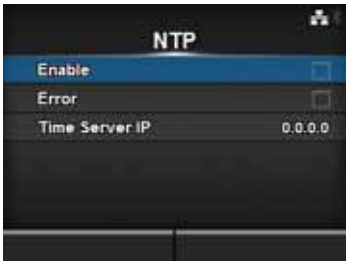

Enable

Interface > Network > Services > NTP > Enable

Enable or disable the functions for NTP.
The options are as follows:
- **Enabled**: Enable the NTP function.
- **Disabled**: Disable the NTP function.

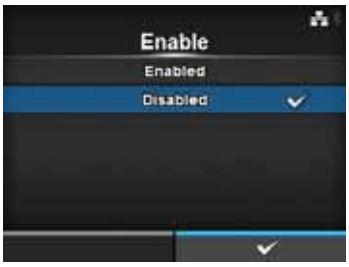

Error

Interface > Network > Services > NTP > Error

Set to show the NTP error message if detected.
The options are as follows:
- **Enabled**: Shows the error message.
- **Disabled**: Do not show the error message.

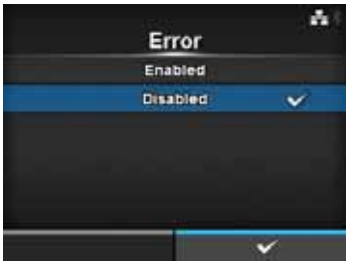

Time Server IP

Interface > Network > Services > NTP > Time Server IP

Set the IP address of the NTP server.
The setting range is from 0.0.0.0 to 255.255.255.255.
The IP address should normally be set to 0.0.0.0 (the default) which means that global NTP servers will be assigned automatically. Set to a valid IP if the time synchronization is requested for a specific server.

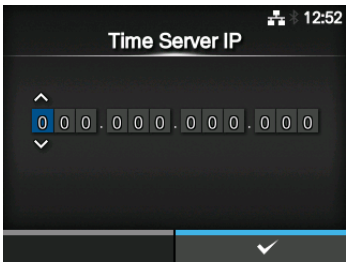

LPD

Interface > Network > Services > LPD

Enable or disable the functions for LPD.
The options are as follows:

- **Enabled**: Enable the LPD function.
- **Disabled**: Disable the LPD function.

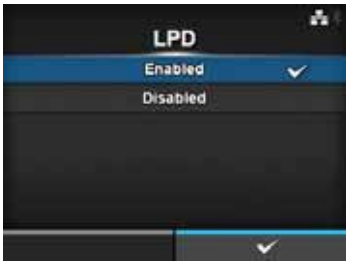

FTP

Interface > Network > Services > FTP

Enable or disable the functions for FTP.
The options are as follows:

- **Enabled**: Enable the FTP function.
- **Disabled**: Disable the FTP function.

SNMP

Interface > Network > Services > SNMP

Set the functions for SNMP.
The SNMP function enables you to monitor and manage a UDP/IP based network.
The setting items are as follows:

1	sysContact	Set the contact information.
2	sysName	Set the name information.
3	sysLocation	Set the location information.
4	Agent	Set the Agent function.
5	Traps	Set the Traps function.

sysContact

Interface > Network > Services > SNMP > sysContact

Set the contact information.
You can enter alphabetic, numeric and symbolic characters in the range of 0 to 255 characters.

sysName

Interface > Network > Services > SNMP > sysName

Set the name information.
You can enter alphabetic, numeric and symbolic characters in the range of 0 to 255 characters.

sysLocation

Interface > Network > Services > SNMP > sysLocation

Set the location information.
You can enter alphabetic, numeric and symbolic characters in the range of 0 to 255 characters.

Agent

Interface > Network > Services > SNMP > Agent

Set the Agent function.
The setting items are as follows:

1	Enable	Use the Agent function.
2	Read-Only	Set the Read-Only function.
3	Read-Write	Set the Read-Write function.

Enable

Interface > Network > Services > SNMP > Agent > Enable

Enable or disable the functions for Agent.
The options are as follows:

- **Enabled**: Enable the functions for Agent.
- **Disabled**: Disable the functions for Agent.

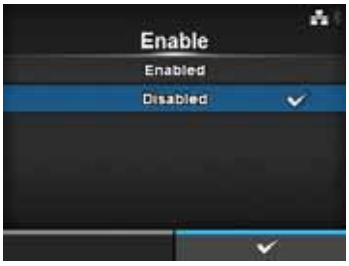

Read-Only

Interface > Network > Services > SNMP > Agent > Read-Only

Set the Read-Only function.
The setting items are as follows:

1	SNMP Version	Set the SNMP version.
2	Community	Set the Read-Only community name. *Shows only if you have selected **1|2c|3** or **1|2c** in the **SNMP Version** menu.
3	User	Set the Read-Only user name. *Shows only if you have selected **1|2c|3** or **3** in the **SNMP Version** menu.
4	User Security	Set the Read-Only security level. *Shows only if you have selected **1|2c|3** or **3** in the **SNMP Version** menu.
5	Authentication Protocol	Set the authentication protocol. *Shows only if you have selected **Authentication** or **Privacy** in the **User Security** menu.
6	Authentication Passphrase	Set the authentication passphrase. *Shows only if you have selected **Authentication** or **Privacy** in the **User Security** menu.
7	Privacy Protocol	Set the privacy protocol. *Shows only if you have selected **Privacy** in the **User Security** menu.
8	Privacy Passphrase	Set the privacy passphrase. *Shows only if you have selected **Privacy** in the **User Security** menu.

SNMP Version

Interface > Network > Services > SNMP > Agent > Read-Only > SNMP Version

Set the SNMP version.
The options are as follows:

- **1|2c|3**
- **1|2c**
- **3**
- **Disabled**

Community

Interface > Network > Services > SNMP > Agent > Read-Only > Community

Set the Read-Only community name.
Shows only if you have selected **1|2c|3** or **1|2c** in the **SNMP Version** menu.
You can enter alphabetic, numeric and symbolic characters in the range of 1 to 32 characters.
Initial setting: public

User

Interface > Network > Services > SNMP > Agent > Read-Only > User

Set the Read-Only user name.
Shows only if you have selected **1|2c|3** or **3** in the **SNMP Version** menu.
You can enter alphabetic, numeric and symbolic characters in the range of 1 to 32 characters.
Initial setting: rouser

User Security

Interface > Network > Services > SNMP > Agent > Read-Only > User Security

Set the Read-Only security level.
Shows only if you have selected **1|2c|3** or **3** in the **SNMP Version** menu.

The options are as follows:

- **None**
- **Authentication**
- **Privacy**

Authentication Protocol

Interface > Network > Services > SNMP > Agent > Read-Only > Authentication Protocol

Set the authentication protocol.
Shows only if you have selected **Authentication** or **Privacy** in the **User Security** menu.
The options are as follows:

- **MD5**
- **SHA**

Authentication Passphrase

Interface > Network > Services > SNMP > Agent > Read-Only > Authentication Passphrase

Set the authentication passphrase.
Shows only if you have selected **Authentication** or **Privacy** in the **User Security** menu.
You can enter alphabetic, numeric and symbolic characters in the range of 8 to 32 characters.
Initial setting: mypassword

Privacy Protocol

Interface > Network > Services > SNMP > Agent > Read-Only > Privacy Protocol

Set the privacy protocol.
Shows only if you have selected **Privacy** in the **User Security** menu.
The options are as follows:

- **DES**
- **AES**

Privacy Passphrase

Interface > Network > Services > SNMP > Agent > Read-Only > Privacy Passphrase

Set the privacy passphrase.
Shows only if you have selected **Privacy** in the **User Security** menu.
You can enter alphabetic, numeric and symbolic characters in the range of 8 to 32 characters.
Initial setting: mypassword

Read-Write

Interface > Network > Services > SNMP > Agent > Read-Write

Set the Read-Write function.
The setting items are as follows:

1	SNMP Version	Set the SNMP version.
2	Community	Set the Read-Write community name. *Shows only if you have selected **1|2c|3** or **1|2c** in the **SNMP Version** menu.
3	User	Set the Read-Write user name. *Shows only if you have selected **1|2c|3** or **1|2c** in the **SNMP Version** menu.
4	User Security	Set the Read-Write security level. *Shows only if you have selected **1|2c|3** or **3** in the **SNMP Version** menu.
5	Authentication Protocol	Set the authentication protocol. *Shows only if you have selected **Authentication** or **Privacy** in the **User Security** menu.
6	Authentication Passphrase	Set the authentication passphrase. *Shows only if you have selected **Authentication** or **Privacy** in the **User Security** menu.
7	Privacy Protocol	Set the privacy protocol. *Shows only if you have selected **Privacy** in the **User Security** menu.
8	Privacy Passphrase	Set the privacy passphrase. *Shows only if you have selected **Privacy** in the **User Security** menu.

SNMP Version

Interface > Network > Services > SNMP > Agent > Read-Write > SNMP Version

Set the SNMP version.
The options are as follows:

- **1|2c|3**
- **1|2c**
- **3**
- **Disabled**

Community

Interface > Network > Services > SNMP > Agent > Read-Write > Community

Set the Read-Write community name.
Shows only if you have selected **1|2c|3** or **1|2c** in the **SNMP Version** menu.
You can enter alphabetic, numeric and symbolic characters in the range of 0 to 32 characters.
Initial setting: private

User

Interface > Network > Services > SNMP > Agent > Read-Write > User

Set the Read-Write user name.
Shows only if you have selected **1|2c|3** or **1|2c** in the **SNMP Version** menu.
You can enter alphabetic, numeric and symbolic characters in the range of 0 to 32 characters.
Initial setting: rwuser

User Security

Interface > Network > Services > SNMP > Agent > Read-Write > User Security

Set the Read-Write security level.
Shows only if you have selected **1|2c|3** or **3** in the **SNMP Version** menu.

The options are as follows:
- **None**
- **Authentication**
- **Privacy**

Authentication Protocol

Interface > Network > Services > SNMP > Agent > Read-Write > Authentication Protocol

Set the authentication protocol.
Shows only if you have selected **Authentication** or **Privacy** in the **User Security** menu.
The options are as follows:
- **MD5**
- **SHA**

Authentication Passphrase

Interface > Network > Services > SNMP > Agent > Read-Write > Authentication Passphrase

Set the authentication passphrase.
Shows only if you have selected **Authentication** or **Privacy** in the **User Security** menu.
You can enter alphabetic, numeric and symbolic characters in the range of 0 to 32 characters.
Initial setting: mypassword

Privacy Protocol

Interface > Network > Services > SNMP > Agent > Read-Write > Privacy Protocol

Set the privacy protocol.
Shows only if you have selected **Privacy** in the **User Security** menu.
The options are as follows:

- **DES**
- **AES**

Privacy Passphrase

Interface > Network > Services > SNMP > Agent > Read-Write > Privacy Passphrase

Set the privacy passphrase.
Shows only if you have selected **Privacy** in the **User Security** menu.
You can enter alphabetic, numeric and symbolic characters in the range of 8 to 32 characters.
Initial setting: mypassword

Traps

Interface > Network > Services > SNMP > Traps

Set the Traps function.
The setting items are as follows:

1	Enable	Use the Traps function.
2	SNMP Version	Set the SNMP version.
3	IP Version	Set the IP version.
4	Destinations	Set the number of the trap destinations.
5	Destination 1	Set address 1 for the trap destination.
6	Destination 2	Set address 2 for the trap destination. *Shows only if you have selected **2** or **3** in the **Destination** menu.
7	Destination 3	Set address 3 for the trap destination. *Shows only if you have selected **3** in the **Destination** menu.
8	Community	Set the Traps community name. *Shows only if you have selected **1** or **2c** in the **SNMP Version** menu.
9	User	Set the Traps user name. *Shows only if you have selected **3** in the **SNMP Version** menu.
10	Engine ID	Set the engine ID. *Shows only if you have selected **3** in the **SNMP Version** menu.
11	Security	Set the security level. *Shows only if you have selected **3** in the **SNMP Version** menu.
12	Authentication Protocol	Set the authentication protocol. *Shows only if you have selected **Authentication** or **Privacy** in the **Security** menu.
13	Authentication Passphrase	Set the authentication passphrase. *Shows only if you have selected **Authentication** or **Privacy** in the **Security** menu.
14	Privacy Protocol	Set the privacy protocol. *Shows only if you have selected **Privacy** in the **Security** menu.
15	Privacy Passphrase	Set the privacy passphrase. *Shows only if you have selected **Privacy** in the **Security** menu.

Enable

Interface > Network > Services > SNMP > Traps > Enable

Enable or disable the functions for Traps.
The options are as follows:

- **Enabled**: Enable the Traps function.
- **Disabled**: Disable the Traps function.

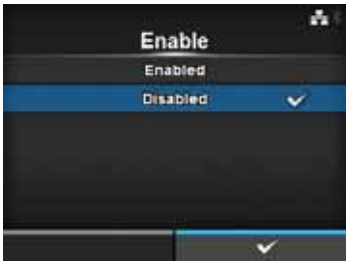

SNMP Version

Interface > Network > Services > SNMP > Traps > SNMP Version

Set the SNMP version.
The options are as follows:

- **1**
- **2c**
- **3**

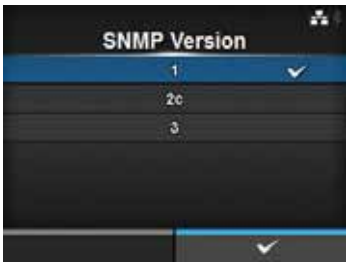

IP Version

Interface > Network > Services > SNMP > Traps > IP Version

Set the IP version.
The options are as follows:

- **4**
- **6**

Destinations

Interface > Network > Services > SNMP > Traps > Destinations

Set the number of the trap destinations.
The setting range is from 1 to 3.

Destination 1

Interface > Network > Services > SNMP > Traps > Destination 1

Set address 1 for trap destination.

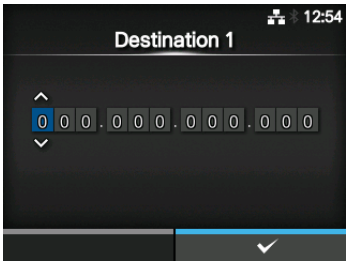

Destination 2

Interface > Network > Services > SNMP > Traps > Destination 2

Set address 2 for trap destination.
Shows only if you have selected **2** or **3** in the **Destination** menu.

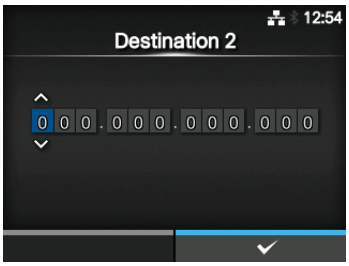

Destination 3

Interface > Network > Services > SNMP > Traps > Destination 3

Set address 3 for trap destination.
Shows only if you have selected **3** in the **Destination** menu.

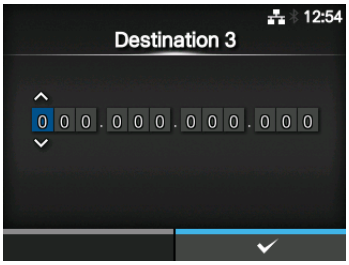

Community

Interface > Network > Services > SNMP > Traps > Community

Set the Traps community name.
Shows only if you have selected **1** or **2c** in the **SNMP Version** menu.
You can enter alphabetic, numeric and symbolic characters in the range of 1 to 32 characters.
Initial setting: trapcom

User

Interface > Network > Services > SNMP > Traps > User

Set the Traps user name.
Shows only if you have selected **3** in the **SNMP Version** menu.
You can enter alphabetic, numeric and symbolic characters in the range of 1 to 32 characters.
Initial setting: trapuser

Engine ID

Interface > Network > Services > SNMP > Traps > Engine ID

Set the engine ID.
Shows only if you have selected **3** in the **SNMP Version** menu.
Initial setting: Created from the MAC address.

Hexadecimal characters are allowed and the range is from 10 to 64 characters (only an even number of characters are allowed).

Security

Interface > Network > Services > SNMP > Traps > Security

Set the security level.
Shows only if you have selected **3** in the **SNMP Version** menu.
The options are as follows:

- **None**
- **Authentication**
- **Privacy**

Authentication Protocol

Interface > Network > Services > SNMP > Traps > Authentication Protocol

Set the authentication protocol.
Shows only if you have selected **Authentication** or **Privacy** in the **Security** menu.
The options are as follows:

- **MD5**
- **SHA**

Authentication Passphrase

Interface > Network > Services > SNMP > Traps > Authentication Passphrase

Set the authentication passphrase.
Shows only if you have selected **Authentication** or **Privacy** in the **Security** menu.
You can enter alphabetic, numeric and symbolic characters in the range of 0 to 32 characters.
Initial setting: mypassword

Privacy Protocol

Interface > Network > Services > SNMP > Traps > Privacy Protocol

Set the privacy protocol.
Shows only if you have selected **Privacy** in the **Security** menu.
The options are as follows:

- **DES**
- **AES**

Privacy Passphrase

Interface > Network > Services > SNMP > Traps > Privacy Passphrase

Set the privacy passphrase.
Shows only if you have selected **Privacy** in the **Security** menu.
You can enter alphabetic, numeric and symbolic characters in the range of 8 to 32 characters.
Initial setting: mypassword

Advanced

Interface > *Network* > *Advanced*

Set the advanced function for the interface.
The setting item is as follows:

1	ARP Announcement	Set the ARP announcement.

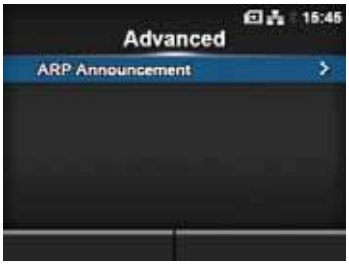

ARP Announcement

Interface > *Network* > *Advanced* > *ARP Announcement*

Set the functions for ARP announcement.
The ARP announcement is useful for updating other hosts mapping of a hardware address when the IP address or MAC address of the sender has changed.
The setting items are as follows:

1	Additional	Enable or disable the additional ARP announcement.
2	Periodic	Set the periodic timing for ARP announcement.

Additional

Interface > *Network* > *Advanced* > ARP Announcement > Additional

Set the additional ARP announcement.
The options are as follows:

- **Enabled:** Enable the additional ARP announcement. The ARP is sent at 1, 2, 4, 8 and 16 seconds after the link up/DHCP assignment.
- **Disabled:** Disable the additional ARP announcement. The ARP is only sent at 1 second after the link up/DHCP assignment.

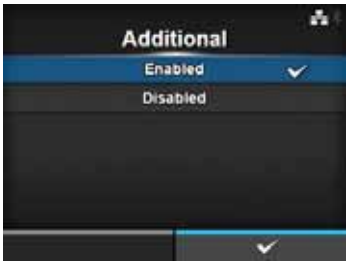

Periodic

Interface > *Network* > *Advanced* > ARP Announcement > Periodic

Set the interval of the ARP announcement in the range of 0 to 600 seconds.

Initial setting: 0

IEEE1284

Interface > IEEE1284

Set the IEEE1284 connection.
The setting items are as follows:

1	Flow Control	Set the communication protocol.
2	BCC	Set the BCC check function. *Shows only if you have selected **Status5** in the **Flow Control** menu.

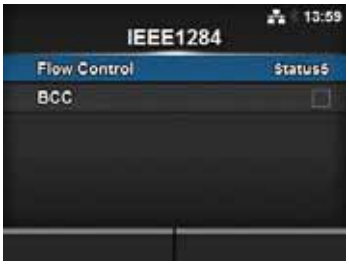

Flow Control

Interface > IEEE1284 > Flow Control

Set the communication protocol.
The options are as follows:
- **Status4 Multi**
- **Status5**
- **None**

BCC

Interface > IEEE1284 > BCC

Enable or disable the functions for BCC.
Shows only if you have selected **Status5** in the **Flow Control** menu.
The options are as follows:
- **Enabled**: Enable the BCC check function.
- **Disabled**: Disable the BCC check function.

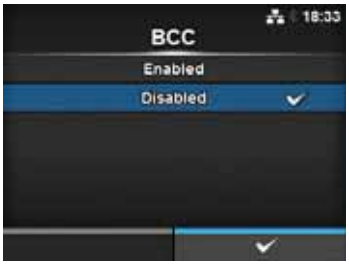

RS-232C

Interface > RS-232C

Set the RS-232C connection.
The setting items are as follows:

1	Baudrate	Set the communication speed.
2	Parameters	Set the data parameters.
3	Flow Control	Set the communication protocol.
4	BCC	Set the BCC check function. *Shows only if you have selected **Status5** in the **Flow Control** menu.

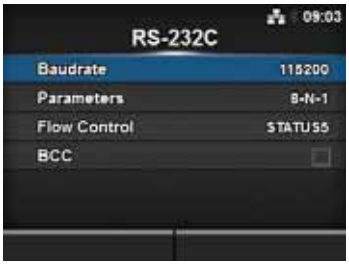

Baudrate

Interface > RS-232C > Baudrate

Set the baud rate (bps).
The options are as follows:

- **2400**
- **4800**
- **9600**
- **19200**
- **38400**
- **57600**
- **115200**

Parameters

Interface > RS-232C > Parameters

Set the data parameter.
The options are as follows:
Refer to the table below for the parameter configurations.

- **8-N-1**
- **8-O-1**
- **8-E-1**
- **8-N-2**
- **8-O-2**
- **8-E-2**
- **7-N-1**
- **7-O-1**
- **7-E-1**
- **7-N-2**
- **7-O-2**
- **7-E-2**

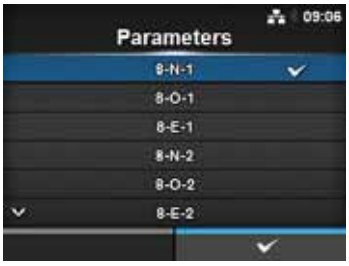

Parameter Configurations List

Parameter	Data length (bit)	Parity	Stop bit (bit)
8-N-1	8	NONE	1
8-O-1	8	ODD	1
8-E-1	8	EVEN	1
8-N-2	8	NONE	2
8-O-2	8	ODD	2
8-E-2	8	EVEN	2
7-N-1	7	NONE	1
7-O-1	7	ODD	1
7-E-1	7	EVEN	1
7-N-2	7	NONE	2
7-O-2	7	ODD	2
7-E-2	7	EVEN	2

Flow Control

Interface > RS-232C > Flow Control

Set the communication protocol.
The options are as follows:

- **READY/BUSY Multi**
- **XON/XOFF Multi**
- **STATUS3**
- **STATUS4**
- **STATUS5**
- **None**

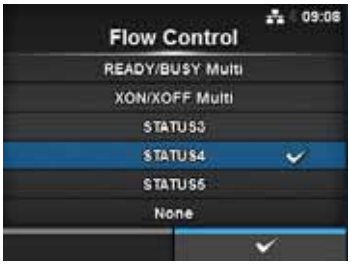

BCC

Interface > RS-232C > BCC

Enable or disable the functions for BCC.
Shows only if you have selected **Status5** in the **Flow Control** menu.
The options are as follows:

- **Enabled**: Enable the BCC check function.
- **Disabled**: Disable the BCC check function.

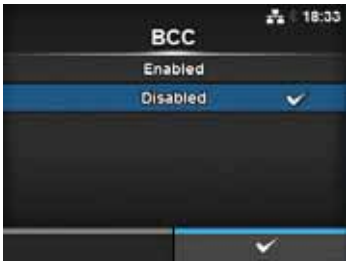

USB

Interface > USB

Set the USB connection.
The setting items are as follows:

1	Flow Control	Set the communication protocol.
2	BCC	Set the BCC check function. *Shows only if you have selected **Status5** in the **Flow Control** menu.

Flow Control

Interface > USB > Flow Control

Set the communication protocol.
The options are as follows:

- **Status4**
- **Status5**
- **None**

BCC

Interface > USB > BCC

Enable or disable the functions for BCC.
Shows only if you have selected **Status5** in the **Flow Control** menu.
The options are as follows:

- **Enabled**: Enable the BCC check function.
- **Disabled**: Disable the BCC check function.

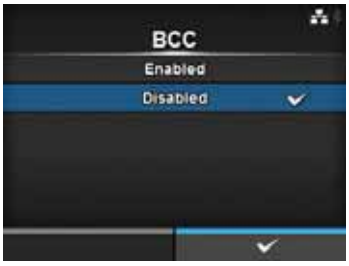

Bluetooth

Interface > Bluetooth

Set the Bluetooth connection.
The setting items are as follows:

1	Enable	Enable or disable the functions for Bluetooth.
2	Name	Set the device name for the printer.
3	Pin Code	Set the PIN code.
4	BD Address	Shows the BD address of this printer. (You cannot change this address.)
5	Firm Version	Shows the firmware version of the Bluetooth. (You cannot change this value.)
6	Host BD Addr	Check the Host BD address.
7	Authentication	Authentication level Setting
8	ISI	Set the ISI communication parameter.
9	ISW	Set the ISW communication parameter.
10	PSI	Set the PSI communication parameter.
11	PSW	Set the PSW communication parameter.
12	CRC Mode	Set the CRC check function.
13	Flow Control	Set the communication protocol.

Enable

Interface > Bluetooth > Enable

Enable or disable the functions for Bluetooth.
The options are as follows:

- **Enabled**: Enable the Bluetooth function.
- **Disabled**: Disable the Bluetooth function.

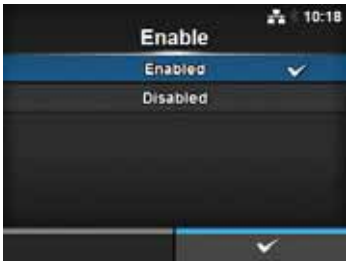

Name

Interface > Bluetooth > Name

Set the device name for the printer.
You can enter one to fifty-three characters including alphabet (upper case and lower case), numbers and symbols.

Pin Code

Interface > Bluetooth > Pin Code

Set the PIN code.
You can enter four to sixteen characters including alphabet (upper case and lower case), numbers and symbols.

Authentication

Interface > Bluetooth > Authentication

Set the authentication level.
The options are as follows:

- **None**
- **Level 2-1**
- **Level 2-2**
- **Level 3**
- **Level 4**

ISI

Interface > Bluetooth > ISI

Set the ISI communication parameter.
The setting range is 0, or from 18 to 4096.
Set to a value that is higher than the ISW communication parameter setting value.

ISW

Interface > Bluetooth > ISW

Set the ISW communication parameter.
The setting range is 0, or from 17 to 4096.
Set to a value that is lower than the ISI communication parameter setting value.

PSI

Interface > Bluetooth > PSI

Set the PSI communication parameter.
The setting range is from 18 to 4096.
Set to a value that is higher than the PSW communication parameter setting value.

PSW

Interface > Bluetooth > PSW

Set the PSW communication parameter.
The setting range is from 17 to 4096.
Set to a value that is lower than the PSI communication parameter setting value.

CRC Mode

Interface > Bluetooth > CRC Mode

Enable or disable the functions for CRC.
The options are as follows:

- **Enabled**: Enable the CRC function.
- **Disabled**: Disable the CRC function.

Flow Control

Interface > Bluetooth > Flow Control

Set the communication protocol.
The options are as follows:

- **Status3**
- **Status4 Multi**
- **None**

Ignore CR/LF

Interface > Ignore CR/LF

Ignore or acknowledge the CR/LF code of the received data.
The options are as follows:

- **Enabled**: Ignore the CR/LF code.
- **Disabled**: Do not ignore the CR/LF code.

Ignore CAN/DLE

Interface > Ignore CAN/DLE

Ignore or acknowledge the CAN/DLE code of the received data.
The options are as follows:

- **Enabled**: Ignore the CAN/DLE code.
- **Disabled**: Do not ignore the CAN/DLE code.

External I/O

Interface > External I/O

Use the external (EXT) terminal as an interface between the host and the printer.
The setting items are as follows:

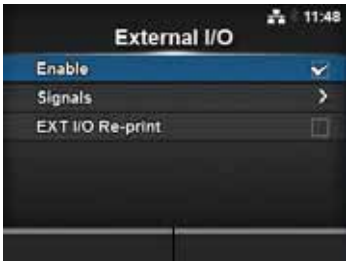

1	Enable	Enable or disable the external terminal.
2	Signals	Set the external signal. *Shows only if you have selected **Enabled** in the **Enable** menu.
3	EXT I/O Re-print	Set the reprint function that uses the external terminal.

Enable

Interface > External I/O > Enable

Enable or disable the external terminal.
The options are as follows:

- **Enabled**: Enable the external signal (EXT) function.
- **Disabled**: Disable the external signal (EXT) function.

Signals

Interface > External I/O > Signals

Set the external signal.
Shows only if you have selected **Enabled** in the **Enable** menu.
The setting items are as follows:

1	EXT 9PIN	Set the output signal of the EXT 9PIN.
2	EXT Mode	Set the mode of the external signal.
3	Inputs	Set the input pin No. of the Signal Print Start/ Signal Reprint.
4	Outputs	Set the output pin No. of the signal.

EXT 9PIN

Interface > External I/O > Signals > EXT 9PIN

Set the output signal of the EXT 9PIN.
The options are as follows:

- **MODE1**: The output signal becomes “Active” when there is remaining print data without error in online mode.
- **MODE2**: The output signal becomes “Active” when the printer is ONLINE.

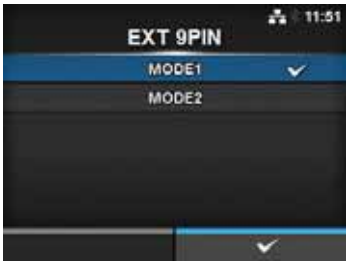

EXT Mode

Interface > External I/O > Signals > EXT Mode

Set the external signal (EXT) type.
The options are as follows:

- **TYPE1**
- **TYPE2**
- **TYPE3**
- **TYPE4**

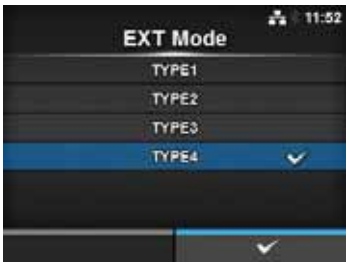

Type	Operation Details
TYPE1	The print done signal (PREND) is High before label printing, and it becomes Low after print completion. The signal level becomes High after 20 ms.
TYPE2	The print done signal (PREND) is Low before label printing, and it becomes High after print completion. The signal level becomes Low after 20 ms.
TYPE3	The print done signal (PREND) is High before label printing, becomes Low from the start to the end of print, and becomes High again after print completion.
TYPE4	The print done signal (PREND) is Low before label printing, becomes High from the start to the end of print, and becomes Low again after print completion.

*Refer to **Section 7.7.6 External Signal Interface (EXT)** for the **Timing Chart of the EXT Output Signal**.

Inputs

Interface > External I/O > Signals > Inputs

Set the input pin No. of the Signal Print Start/Signal Reprint.

Press the ▲/▼ buttons to highlight the item that you want to change, then press the ◀/▶ buttons to change the pin No.

Press the ↵ button to save the settings and return to the **Signals** menu.
The setting items are as follows:

1	Start Print	Set the input pin No. of the Signal Print Start. The options are as follows: • **PIN5**: Set the Signal Print Start to 5PIN. • **PIN7**: Set the Signal Print Start to 7PIN.
2	Reprint	Set the input pin No. of the Signal Reprint. The options are as follows: • **PIN5**: Set the Signal Reprint to 5PIN. • **PIN7**: Set the Signal Reprint to 7PIN.

Note
You cannot set any inputs using the same pin number. If you attempt to set the same number, the settings will show in red and you cannot save the settings.

Outputs

Interface > External I/O > Signals > Outputs

Set the output pin No. of the signal.

Press the ▲/▼ buttons to highlight the item that you want to change, then press the ◀/▶ buttons to change the pin No.

Press the ↵ button to save the settings and return to the **Signals** menu.

The setting items are as follows:

1	Paper End/ Paper/Ribbon End (If RFID Mode is enabled) (CL4NX only)	Set the output pin No. of the Signal Paper End. Set the output pin No. of the Signal Paper/ Ribbon End if you have installed the RFID.
2	Ribbon End/ RFID Tag Error (If RFID Mode is enabled) (CL4NX only)	Set the output pin No. of the Signal Ribbon End. Set the output pin No. of the Signal RFID Tag Error if you have installed the RFID.
3	Machine Error/ Machine/RFID Error (If RFID Mode is enabled) (CL4NX only)	Set the output pin No. of the Signal Machine Error. Set the output pin No. of the Signal Machine/ RFID Error if you have installed the RFID.
4	Print Done	Set the output pin No. of the Signal Print Done.
5	Qty/Offline	Shows **Qty** if you have selected **MODE1** in the **EXT 9PIN** menu. Shows **Offline** if you have selected **MODE2** in the **EXT 9PIN** menu. Set the output pin No. of the Signal Qty/ Offline.
6	Ribbon Near End	Set the output pin No. of the Signal Ribbon Near End.
7	Dispenser	Set the output pin No. of the Signal Dispenser. *To use this signal, connect the dispenser unit or linerless kit (CL4NX only).

The options for each signal outputs are as follows:

- **PIN1**: Set the selected signal to 1PIN.
- **PIN3**: Set the selected signal to 3PIN.
- **PIN4**: Set the selected signal to 4PIN.
- **PIN6**: Set the selected signal to 6PIN.
- **PIN9**: Set the selected signal to 9PIN.
- **PIN10**: Set the selected signal to 10PIN.
- **OFF**: Set the selected signal to off mode.

Note

You cannot set any outputs using the same pin number. If you attempt to set the same number, the settings will show in red and you cannot save the settings.

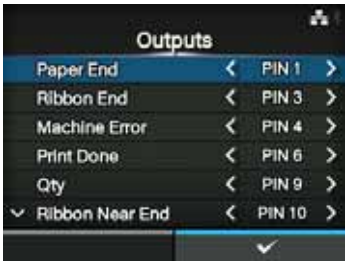

(If RFID Mode is enabled) (CL4NX only)

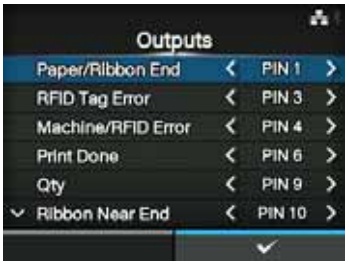

EXT I/O Re-print

Interface > External I/O > EXT I/O Re-print

Set the reprint function for use with the external terminal.
The options are as follows:

- **Enabled**: Enable the reprint function.
- **Disabled**: Disable the reprint function.

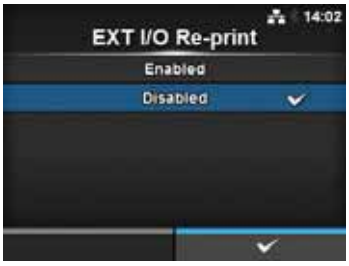

RFID (CL4NX only)

Interface > RFID

Perform the RFID settings.
*Shows only for the RFID model.

The setting items are as follows:

1	Antenna Pitch	Set the antenna pitch.
2	Write Power	Set the antenna power for writing data to the RFID tag.
3	Read Power	Set the antenna power for reading data from the RFID tag.
4	Tag Offset	Set the tag offset.
5	Reader Model	Shows the RFID module model.
6	Reader Version	Shows the RFID module firmware version.
7	View	Shows the RFID tag data.
8	Retry Mode	Set the mode for the RFID error.
9	Retries	Set the number of reprints for the RFID error.
10	Mark bad tags	Set the error print for the RFID tag error.
11	MCS	Set the Multi vendor Chip-based Serialization.
12	Non-RFID Warning	Set the non-RFID warning message.
13	Log RFID Data	Set the log function to record the RFID data.
14	Data To Record	Set the data to be recorded.
15	Output Error Mode	Set the output signal for the RFID error.
16	Pulse Length	Set the pulse length of the output signal for the RFID error.
17	Counters	Set the RFID counter.

Antenna Pitch

Interface > RFID > Antenna Pitch

Set the antenna pitch according to the **Inlay Configuration Guide**.
The options are as follows:

- **Standard**
- **Short**

*Shows only if the module is UHF.

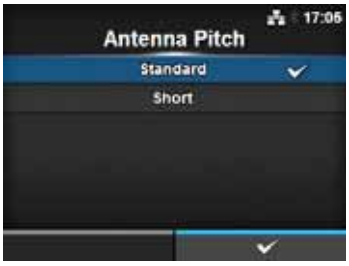

Write Power

Interface > RFID > Write Power

Set the antenna power for writing data to the RFID tag according to the **Inlay Configuration Guide**.
The setting range is from 0 to 24 dBm.

*Shows only if the module is UHF.

Read Power

Interface > RFID > Read Power

Set the antenna power for reading data from the RFID tag according to the **Inlay Configuration Guide**.
The setting range is from 0 to 24 dBm.

*Shows only if the module is UHF.

Tag Offset

Interface > RFID > Tag Offset

Set the value of the tag offset. Contact your dealer to help set this value.
The setting range is from 0 to 240 mm.

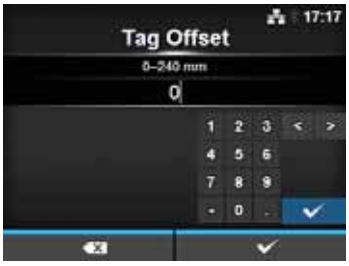

View

Interface > RFID > View

Shows the data of the RFID tag.

Press the ↵ button to change to the **Memory Bank** screen.

Press the right soft button (**READ**) to change to the **Data Reading** screen, to read and show the data.
On the **Data Reading** screen, you can press the right soft button to feed the media and read the data of the next label.

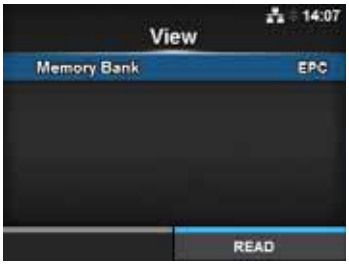

Memory Bank

Interface > RFID > View > Memory Bank

Set the memory area of the RFID tag to read.
The readable memory areas are as follows:

If the installed module is UHF
- **EPC:** EPC area
- **TID:** TID area
- **USER:** USER area
- **PC:** PC/AFI area

If the installed module is HF
- **USER:** USER area
- **UID:** UID area

On the **Data Reading** screen, you can press the right soft button (**FEED**) to feed the media and read the data of the next label.

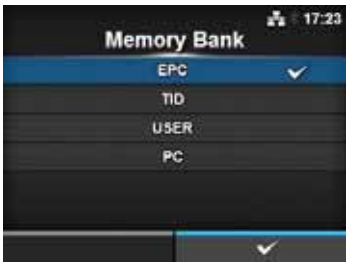

Retry Mode

Interface > RFID > Retry Mode

Set the mode for the RFID error.
The options are as follows:
- **Retry:** Repeat the print according to the number of Retries for the RFID error. Printing stops if the RFID error continues. However, if you have set the Retries to 0, the RFID error screen shows and printing continues.
- **Release:** Do not repeat the print. The RFID error screen shows and continues to print the next item. If the RFID error occurs continuously and reaches the maximum number of Retries, printing stops.

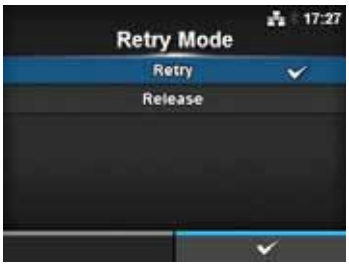

Retries

Interface > RFID > Retries

Set the number of reprint attempts for the RFID error.
The setting range is from 0 to 9.
If you set to 0, the RFID error screen shows and printing continues.

Mark bad tags

Interface > RFID > Mark bad tags

Set the error print for the RFID tag error.

- **Enabled**: Enable the RFID error print function.
- **Disabled**: Disable the RFID error print function.

For details on the RFID error print, refer to **Section 7.5.1 Printing RFID Tag Errors**.

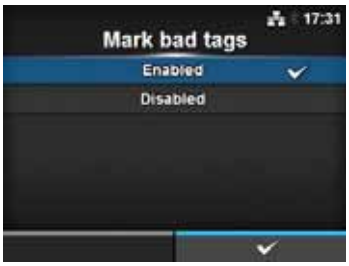

MCS

Interface > RFID > MCS

Set the Multi vendor Chip-based Serialization. Shows only if the module is UHF. The setting items are as follows:

1	MCS	Enable or disable the Multi vendor Chip-based Serialization.
2	Chip Manufacturer	Set the chip manufacturer of the RFID tag. *Shows only if you have selected **Enabled** in the **MCS** menu.
3	Pre-Encoded Tag	Enable or disable the pre-encoded tag. *Shows only if you have selected **Enabled** in the **MCS** menu.
4	Assign Prefix	Set how to assign the three digit prefix data. *Shows only if you have selected **Enabled** in the **MCS** menu.
5	MCS Prefix Digit	Set the number of digits of the three digit prefix data. *Shows only if you have selected **Enabled** in the **MCS** menu.
6	Input Prefix	Set the three digit prefix data. *Shows only if you have selected **Enabled** in the **MCS** menu.

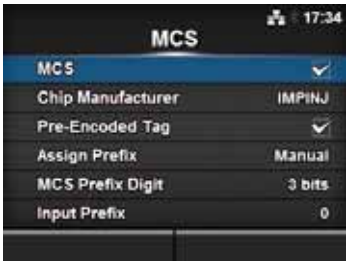

MCS

Interface > RFID > MCS > MCS

Enable or disable the Multi vendor Chip-based Serialization.
- **Enabled**: Enable the Multi vendor Chip-based Serialization.
- **Disabled**: Disable the Multi vendor Chip-based Serialization.

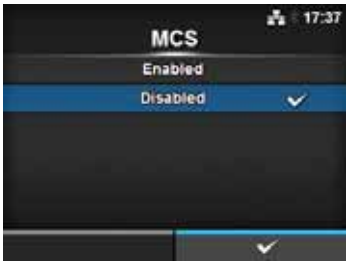

Chip Manufacturer

Interface > RFID > MCS > Chip Manufacturer

Set the chip manufacturer of the RFID tag.
Shows only if you have selected **Enabled** in the **MCS** menu.
The options are as follows:
- **IMPINJ**
- **ALIEN**
- **NXP**

Pre-Encoded Tag

Interface > RFID > MCS > Pre-Encoded Tag

Enable or disable the pre-encoded tag.
Shows only if you have selected **Enabled** in the **MCS** menu.
The options are as follows:
- **Enabled**: Enable the pre-encoded tag.
- **Disabled**: Disable the pre-encoded tag.

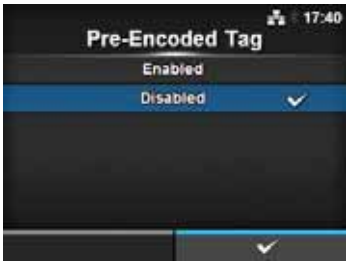

Assign Prefix

Interface > RFID > MCS > Assign Prefix

Set how to assign the three digit prefix data.
Shows only if you have selected **Enabled** in the **MCS** menu.
The options are as follows:

- **Auto**: Set to the manufacturer prefix selected in Chip Manufacturer.
- **Manual**: Set to the prefix determined by the MCS Prefix Digit and Input Prefix.

Note
Does not show if Chip Manufacturer is NXP and Pre-Encoded Tag is enabled.

MCS Prefix Digit

Interface > RFID > MCS > MCS Prefix Digit

Set the number of digits of the prefix data.
This screen shows only if you have selected **Manual** in the **Assign Prefix** menu.
The options are as follows:

- **None**: Set the number of digits of the prefix data to 0.
  Fill in 0 for all three 3 digits of the prefix data.
- **1bit**: Set the number of digits of the prefix data to 1 digit.
  Fill in 0 for the lower 2 bits of the prefix data.
- **2bits**: Set the number of digits of the prefix data to 2 digits.
  Fill in 0 for the lower 1 bit of the prefix data.
- **3bits**: Set the number of digits of the prefix data to 3 digits.

Note
Does not show if Chip Manufacturer is NXP and Pre-Encoded Tag is enabled.

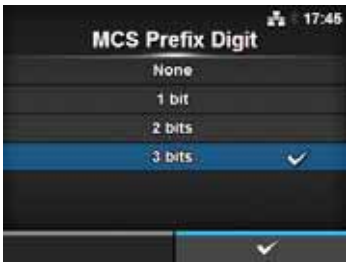

Input Prefix

Interface > RFID > MCS > Input Prefix

Set the three digit prefix data.
This screen shows only if you have selected **Manual** in the **Assign Prefix** menu.
The setting range is from 0 to 7.

Note
Does not show if Chip Manufacturer is NXP and Pre-Encoded Tag is enabled.

Non-RFID Warning

Interface > RFID > Non-RFID Warning

Set the warning for non-RFID error.
The options are as follows:

- **Enabled**: Show the non-RFID warning upon error.
- **Disabled**: Ignore the non-RFID error.

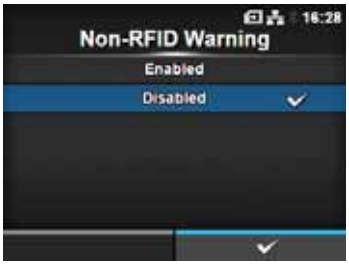

With Non-RFID warning enabled and RFID tag loaded, if a print job without RFID command is sent, a warning error shows before printing so that the RFID tag will not be wasted.
Press the CANCEL button to clear the warning message.

Log RFID Data

Interface > RFID > Log RFID Data

Set the log function to record the RFID data.
The log data can record up to100 tags of information.
The options are as follows:

- **Enabled**: Enable the log function to record the RFID data.
- **Disabled**: Disable the log function to record the RFID data.

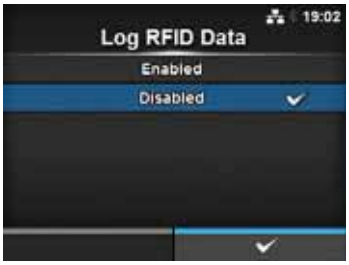

Data To Record

Interface > RFID > Data To Record

Set the data to record the log when Log RFID Data is enabled.
The options are as follows:

- **EPC and TID**: Store the EPC and TID data.
- **EPC**: Store the EPC data.
- **TID**: Store the TID data.

Output Error Mode

Interface > RFID > Output Error Mode

Set the output signal for the RFID error.
The options are as follows:

- **Pulse**: Outputs a pulse as the output signal when an RFID error occurs.
- **Level**: Outputs a level as the output signal when an RFID error occurs.

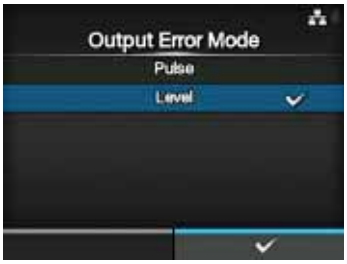

Pulse Length

Interface > RFID > Pulse Length

Set the period of the output signal for the RFID error.
Shows only if you have selected **Pulse** in the **Output Error Mode** menu.
The options are as follows:

- **100 ms**
- **200 ms**
- **300 ms**
- **400 ms**
- **500 ms**

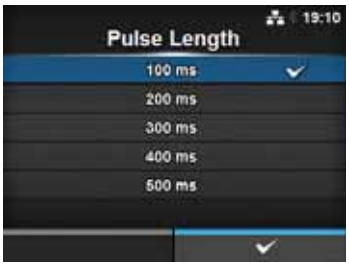

Counters

Interface > RFID> Counters

Set the RFID counter.
The setting items are as follows:

1	Life time	Shows the number of times you have written to the RFID tag.
2	User	Shows the number of times you have printed after the RFID counter is cleared.

Life time

Interface > RFID> Counters > Life time

Shows the number of times you have written to the RFID tag.
The setting items are as follows:

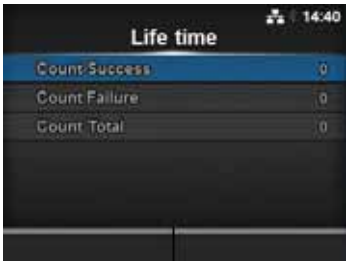

1	Count Success	Shows the total number of successful times you have written to an RFID tag.
2	Count Failure	Shows the total number of RFID write errors.
3	Count Total	Shows the total number of times you have written to an RFID tag. This is the total number including Count Success and Count Failure.

User

Interface > RFID> Counters > User

Shows the number of times you have written to the RFID tag after the RFID counter is cleared.
The setting items are as follows:

1	Count Success	Shows the total number of successful times you have written to an RFID tag after the RFID counter is cleared.
2	Count Failure	Shows the total number of RFID write errors after the RFID counter is cleared.
3	Count Total	Shows the total number of times you have written to an RFID tag after the RFID counter is cleared. This is the total number including Count Success and Count Failure.

Note
You can reset the counter using the right soft button (**CLEAR**) when the counter is 1 or higher.

4.4.3 Applications Menu

In the **Applications** menu, there are setting items as follows:

Applications			
1	Protocol	Set the printer language.	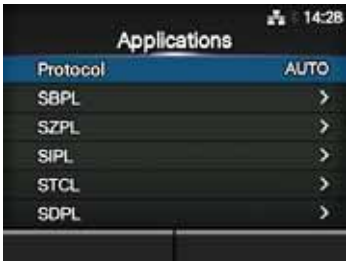
2	SBPL	Set the SBPL printer command.	
3	SZPL	Set the SZPL printer command.	
4	SIPL	Set the SIPL printer command.	
5	STCL	Set the STCL printer command.	
6	SDPL	Set the SDPL printer command.	

Protocol

Applications > Protocol

Set the printer language.
The options are as follows:

- **AUTO**: Automatically analyze the received print data and set the printer language. In Auto mode, the printer can change the language after startup by receiving another language.
- **SBPL**: Set when you use the SBPL printer language.
- **SZPL**: Set when you use the SZPL printer language.
- **SIPL**: Set when you use the SIPL printer language.
- **SDPL**: Set when you use the SDPL printer language.
- **STCL**: Set when you use the STCL printer language.

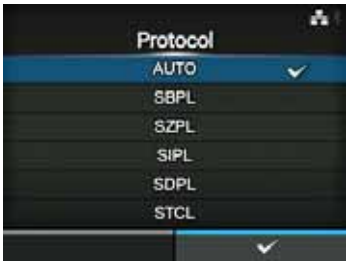

Note (When AUTO is selected in the Protocol menu)

- Once the printer language is fixed, the name of the printer language will appear on the Online/Offline screen. The area to show the name of the printer language will remain blank until the printer language is finalized.

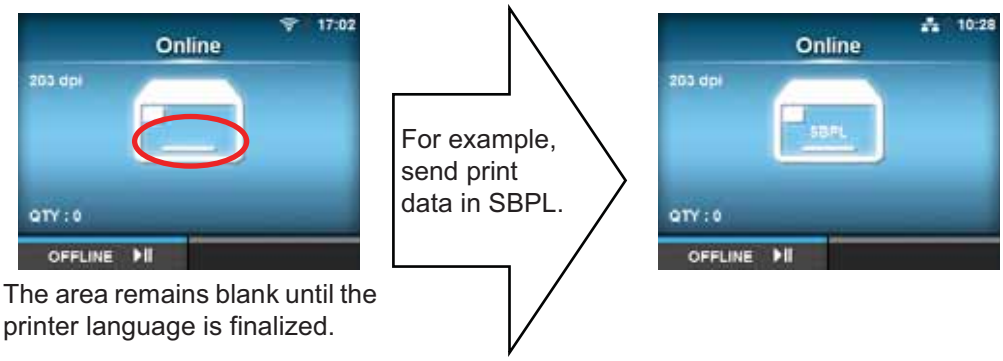

The area remains blank until the printer language is finalized.

- Printer language is finalized with the received print data.
- Non-Standard Code is not supported. When set to Non-Standard Code, the printer language may not be selected as expected.

SBPL

Applications > SBPL

To use SBPL as the printer command, set the following items:

1	Show Error	Enable or disable the command error indication.
2	Standard Code	Set the protocol code.
3	Orientation	Set the layout for printing.
4	Font Settings	Set the font.
5	Compatible	Set the compatible code.

Show Error

Applications > SBPL > Show Error

Enable or disable the command error indication.
- **Enabled**: Enable the command error indication.
- **Disabled**: Disable the command error indication.

Standard Code

Applications > SBPL > Standard Code

Set the protocol code.
- **Enabled**: Use a standard code.
- **Disabled**: Use a non-standard code.

Note
The display of SBPL or other protocols in online/offline mode will change to red color if you have made any changes. In such a case, power on the printer again to make the setting effective.

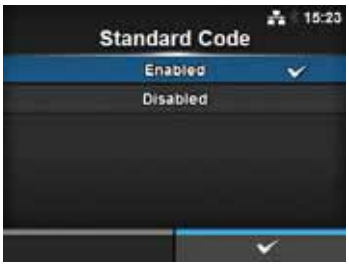

Orientation

Applications > SBPL > Orientation

Select the layout for printing the label.

- **Portrait**: Use a portrait layout. (No rotation)
- **Landscape**: Use a landscape layout. (90-degree rotation)
- **Inv. Portrait**: Use an inverse portrait layout. (180-degree rotation)
- **Inv. Landscape**: Use an inverse landscape layout. (270-degree rotation)

Font Settings

Applications > SBPL > Font Settings

Set the font.
The setting items are as follows:

1	Zero Slash	Set the type for printing zero.
2	Kanji	Set the kanji code to be used.
3	Proportional	Set the character width for printing.
4	Code Page	Set the code page to be used.
5	€	Set the code of the European currency symbol.

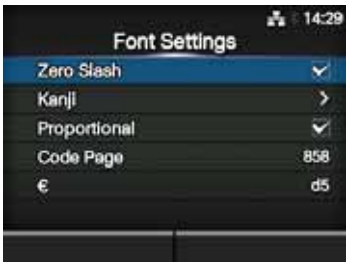

Zero Slash

Applications > SBPL > Font Settings > Zero Slash

Set whether to print the number zero (0) with or without a slash (/).
The options are as follows:

- **Enabled**: Print zero with a slash.
- **Disabled**: Print zero without a slash.

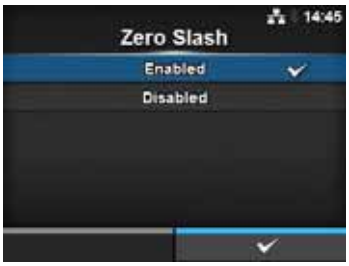

Kanji

Applications > SBPL > Font Settings > Kanji

Set the kanji code to be used.
The setting items are as follows:

1	Kanji Set	Set the kanji code to be used.
2	Character Code	Set the character code to be used.

Kanji Set

Applications > SBPL > Font Settings > Kanji > Kanji Set

Set the kanji code to be used.
The options are as follows:

- **JP-COMPATIBLE**
- **JP-JISX0208**
- **JP-JISX0213**
- **GB18030**
- **BIG5**
- **KCS5601**

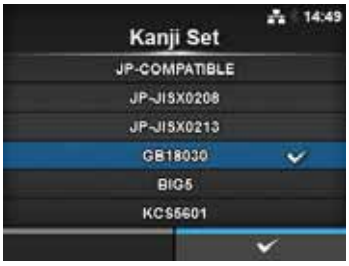

Character Code

Applications > SBPL > Font Settings > Kanji > Character Code

Set the character code to be used.
The options vary depending on the kanji code set in the **Kanji Set**:

When set to **JP-COMPATIBLE** or **JP-JISX0208**

- **JIS**
- **SJIS**
- **UTF-16**

When set to **JP-JISX0213**

- **SJIS**
- **UTF-16**

When set to **GB18030**

- **GB18030**

When set to **BIG5**

- **BIG5**

When set to **KCS5601**

- **KCS5601**

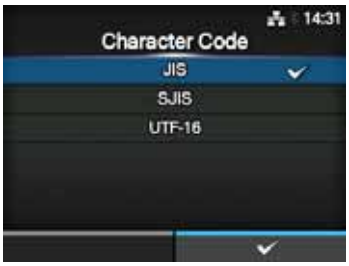

Proportional

Applications > SBPL > Font Settings > Proportional

Set whether to print each character using a different width or same width.
The options are as follows:

- **Enabled**: Print each character with a different width.
- **Disabled**: Print all characters with the same width.

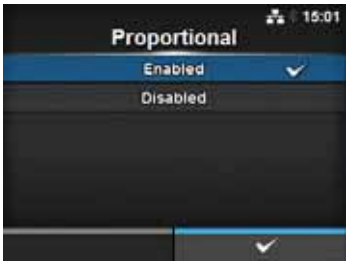

Code Page

Applications > SBPL > Font Settings > Code Page

Select the code page to be used from the list.

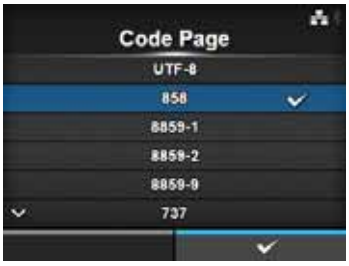

€

Applications > SBPL > Font Settings > €

Set the code of the European currency symbol.
The setting range is from 00 to ff (hexadecimal).

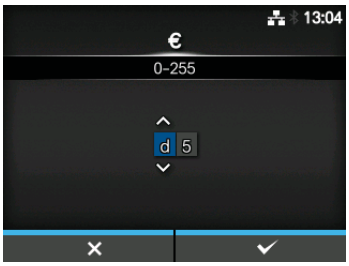

Compatible

Applications > SBPL > Compatible

Set the compatible code for SBPL.
The option is as follows:

- **CODE128(C) Zero Fill**

CODE128(C) Zero Fill

Applications > SBPL > Compatible > CODE128(C) Zero Fill

Set the CODE128(C) Zero Fill.
The options are as follows:

- **Enabled**: Enable CODE128(C) Zero Fill.
- **Disabled**: Disable CODE128(C) Zero Fill.

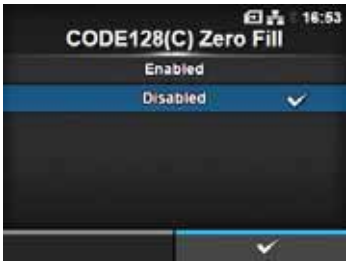

SZPL

Applications > SZPL

To use SZPL as the printer command, set the following items:

1	Label	Set the print position.
2	Caret	Set the caret (^) code.
3	Delimiter	Set the delimiter (,) code.
4	Tilde	Set the tilde (~) code.
5	Clock Format	Set the date format.

Label

Applications > SZPL > Label

Set the print position.
The setting items are as follows:

1	Shift	Set the shift offset position of the label.
2	Top	Set the top offset position of the label.

Shift

Applications > SZPL > Label> Shift

Set the shift offset position of the label.
The setting range is as follows:
The setting range varies depending on the print resolution of the printer.

<CL4NX>

- 203 dpi: -832 to 0 to 832 dots
- 305 dpi: -1248 to 0 to 1248 dots
- 609 dpi: -2496 to 0 to 2496 dots

<CL6NX>

- 203 dpi: -832 to 0 to 832 dots
- 305 dpi: -1248 to 0 to 1248 dots

Top

Applications > SZPL > Label> Top

Set the top offset position of the label.
The setting range is from -120 to 0 to 120.

Caret

Applications > SZPL > Caret

Set the caret (^) code.
The setting range is from 0 to 255.

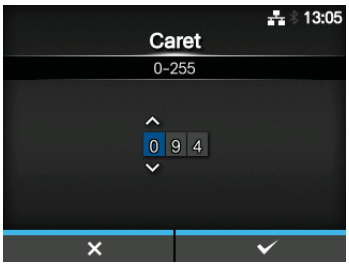

Delimiter

Applications > SZPL > Delimiter

Set the delimiter (,) code.
The setting range is from 0 to 255.

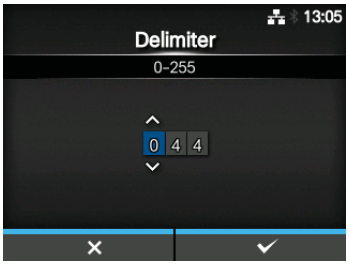

Tilde

Applications > SZPL > Tilde

Set the tilde (~) code.
The setting range is from 0 to 255.

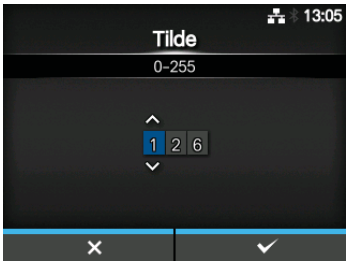

Clock Format

Applications > SZPL > Clock Format

Set the date format.
The options are as follows:

- **(none)**
- **MM/DD/YY (24-hour clock)**
- **MM/DD/YY (12-hour clock)**
- **DD/MM/YY (24-hour clock)**
- **DD/MM/YY (12-hour clock)**

SIPL

Applications > SIPL

To use SIPL as the printer command, set the following item:

1	Font Settings	Set the font.

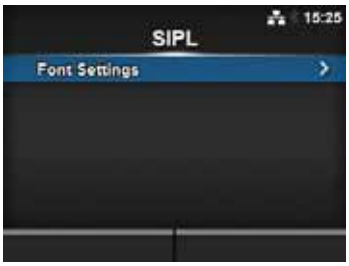

Font Settings

Applications > SIPL > Font Settings

The setting items are as follows:

1	Zero Slash	Set the type for printing zero.
2	€	Set the code of the European currency symbol.
3	Code Page	Set the code page to be used.
4	Proportional	Set the character width for printing.

Zero Slash

Applications > SIPL > Font Settings > Zero Slash

Set whether to print the number zero (0) with or without a slash (/).
The options are as follows:

- **Enabled**: Print zero with a slash.
- **Disabled**: Print zero without a slash.

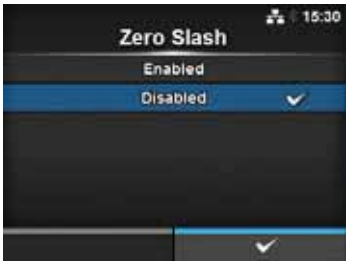

€

Applications > SIPL > Font Settings > €

Set the code of the European currency symbol.
The setting range is from 00 to ff (hexadecimal).

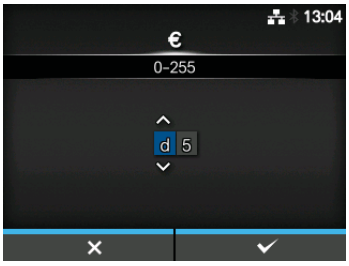

Code Page

Applications > SIPL > Font Settings > Code Page

Select the code page to be used from the list.

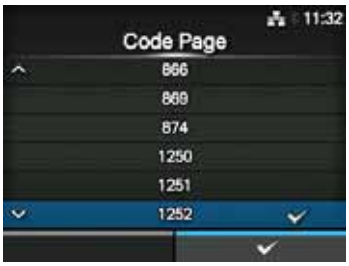

Proportional

Applications > SIPL > Font Settings > Proportional

Set whether to print each character using a different width or same width.
The options are as follows:

- **Enabled**: Print each character with a different width.
- **Disabled**: Print all characters with the same width.

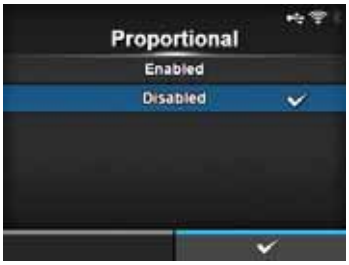

STCL

Applications > STCL

To use STCL as the printer command, set the following item:

1	Command Head	Set the command head.

Command Head

Applications > STCL > Command Head

Set the command head.
The setting items are as follows:

1	Control Code	Set the control code.
2	1st Byte Code	Set the first byte code.
3	2nd Byte Code	Set the second byte code.
4	3rd Byte Code	Set the third byte code.
5	Font Setting	Set the font.

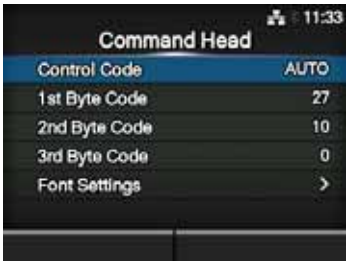

Control Code

Applications > STCL > Command Head > Control Code

Set the control code.
The options are as follows:

- **AUTO**: Perform the protocol detection automatically.
- **ESC|LF|NUL**
- **7B|7C|7D**
- **CUSTOM**: Change the first to third byte codes.

1st Byte Code

Applications > STCL > Command Head > 1st Byte Code

Set the first byte code.
You can change the code only if you have selected **CUSTOM** in the **Control Code** menu.
The setting range is from 0 to 255.

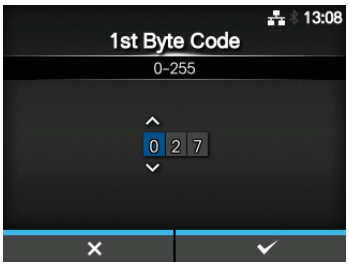

2nd Byte Code

Applications > STCL > Command Head > 2nd Byte Code

Set the second byte code.
You can change the code only if you have selected **CUSTOM** in the **Control Code** menu.
The setting range is from 0 to 255.

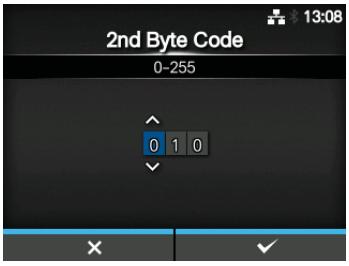

3rd Byte Code

Applications > STCL > Command Head > 3rd Byte Code

Set the third byte code.
You can change the code only if you have selected **CUSTOM** in the **Control Code** menu.
The setting range is from 0 to 255.

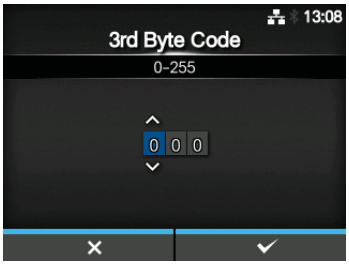

Font Settings

Applications > STCL > Command Head > Font Settings

The setting items are as follows:

1	Zero Slash	Set the type for printing zero.
2	€	Set the code of the European currency symbol.
3	Code Page	Set the code page to be used.

Zero Slash

Applications > STCL > Command Head > Font Settings > Zero Slash

Set whether to print the number zero (0) with or without a slash (/).
The options are as follows:

- **Enabled**: Print zero with a slash.
- **Disabled**: Print zero without a slash.

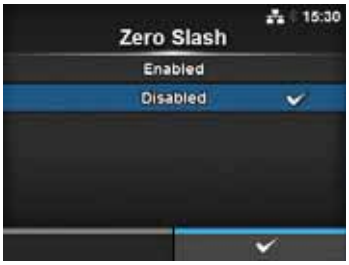

€

Applications > STCL > Command Head > Font Settings > €

Set the code of the European currency symbol.
The setting range is from 00 to ff (hexadecimal).

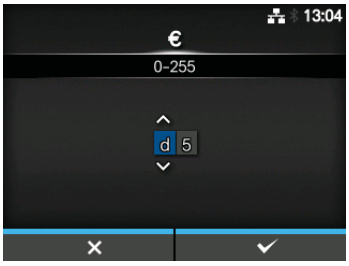

Code Page

Applications > STCL > Command Head > Font Settings > Code Page

Select the code page to be used from the list.

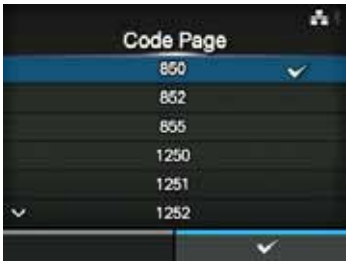

SDPL

Applications > SDPL

To use SDPL as the printer command, set the following item:

1	Control Code	Set the control code.

Control Code

Applications > SDPL > Control Code

Set the control code.
The setting items are as follows:

1	Code Type	Set the type of the control code.
2	SOH	Set the SOH code.
3	STX	Set the STX code.
4	CR	Set the CR code.
5	CNTBY	Set the CNTBY code.

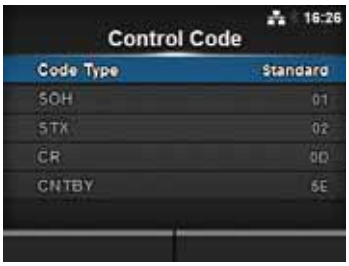

Code Type

Applications > SDPL > Control Code > Code Type

Set the control code type.
The options are as follows:

- **Standard**
- **Alternate 1**
- **Alternate 2**
- **Custom**

SOH

Applications > SDPL > Control Code > SOH

Set the SOH code.
You can change the code only if you have selected **Custom** in the **Code Type** menu.
The setting range is from 00 to ff (hexadecimal).

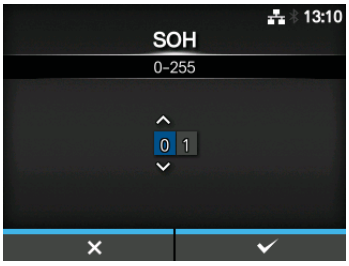

STX

Applications > SDPL > Control Code > STX

Set the STX code.
You can change the code only if you have selected **Custom** in the **Code Type** menu.
The setting range is from 00 to ff (hexadecimal).

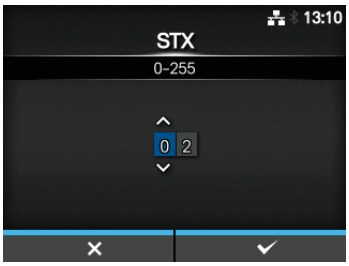

CR

Applications > SDPL > Control Code > CR

Set the CR code.
You can change the code only if you have selected **Custom** in the **Code Type** menu.
The setting range is from 00 to ff (hexadecimal).

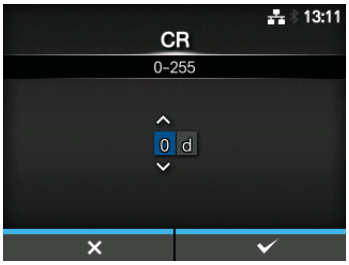

CNTBY

Applications > SDPL > Control Code > CNTBY

Set the CNTBY code.
You can change the code only if you have selected **Custom** in the **Code Type** menu.
The setting range is from 00 to ff (hexadecimal).

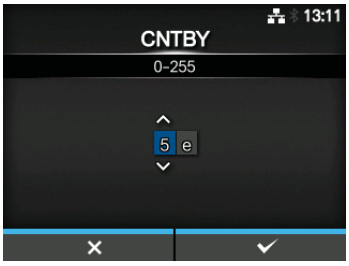

4.4.4 System Menu

In the **System** menu, there are setting items as follows:

System			
1	Regional	Set the display language, time zone, calendar and unit.	
2	Notifications	Set the function to notify when to perform cleaning and parts replacement.	
3	Sound	Set the buzzer sound.	
4	Energy Saving	Set the period before the printer enters sleep mode.	
5	LCD Brightness	Set the brightness of the screen.	
6	Show Total Count	Enable or disable the indication of the total print count.	
7	Password	Set the password.	

Regional			
System > Regional Set the display language, time zone, calendar and unit. The setting items are as follows:			
1	Messages	Set the display language of the LCD.	
2	Unit	Set the unit of length for indication.	
3	Time	Set the time. *You can set the time only if you have installed the optional RTC kit.	
4	Date	Set the date. *You can set the date only if you have installed the optional RTC kit.	
5	Time Zone	Set the time zone.	

Messages	
System > Regional > Messages Set the display language of the LCD. Select the display language from the list.	

Unit

System > Regional > Unit

Set the unit of length for indication.
The options are as follows:

- **dot**
- **"** (inch)
- **mm**

Time

System > Regional > Time

Set the time.
You can set the time only if you have installed the optional RTC kit.

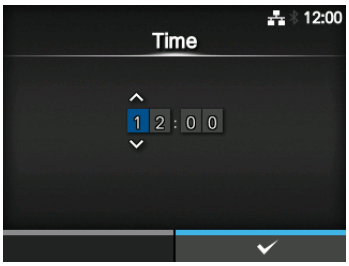

Date

System > Regional > Date

Set the date.
You can set the date only if you have installed the optional RTC kit.
The setting range is from 2000-01-01 to 2035-12-31.
*The date format is Year - Month - Date.

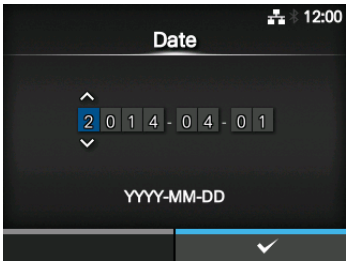

Time Zone

System > Regional > Time Zone > Region > City

Set the time zone.
First select the region from the **Region** list.
Then select the city from the **City** list.

Notifications

System > Notifications

Set the function to notify the timing of cleaning and parts replacement.
The setting items are as follows:

1	Clean Printhead	Notify when the print head needs to be cleaned.
2	Change Printhead	Notify when the print head needs to be replaced.
3	Change Cutter	Notify when the cutter unit needs to be replaced.
4	Change Platen	Notify when the platen roller needs to be replaced.

Clean Printhead

System > Notifications > Clean Printhead

Notify when the print head needs to be cleaned.
The setting items are as follows:

1	Clean Printhead	Enable or disable the notification function about when the print head needs to be cleaned.
2	Cleaning Interval	Set the notification interval about when the print head needs to be cleaned.
3	Clean Counter	Shows the current print distance.

Clean Printhead

System > Notifications > Clean Printhead > Clean Printhead

Enable or disable the notification function about when the print head needs to be cleaned.
The options are as follows:

- **Enabled**: Enable the notification function.
- **Disabled**: Disable the notification function.

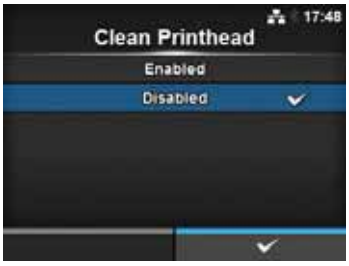

Cleaning Interval

System > Notifications > Clean Printhead > Cleaning Interval

Set the notification interval about when the print head needs to be cleaned.
Available to change only if you have selected **Enabled** in the **Clean Printhead** menu.
The printer shows the print distance as a setting value.
The setting range is from 10 to 1000 m.

Change Printhead

System > Notifications > Change Printhead

Notify when the print head needs to be replaced.
The setting items are as follows:

1	Change Printhead	Enable or disable the notification function about when the print head needs to be replaced.
2	Printhead Interval	Set the notification interval about when the print head needs to be replaced.
3	Printhead Count	Shows the current print distance.

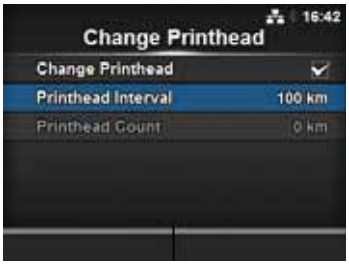

Change Printhead

System > Notifications > Change Printhead > Change Printhead

Enable or disable the notification function about when the print head needs to be replaced.
The options are as follows:

- **Enabled**: Enable the notification function.
- **Disabled**: Disable the notification function.

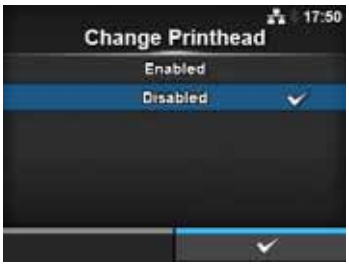

Printhead Interval

System > Notifications > Change Printhead > Printhead Interval

Set the notification interval about when the print head needs to be replaced.
Available to change only if you have selected **Enabled** in the **Change Printhead** menu.
The printer shows the print distance as the setting value.
The setting range is from 10 to 100 km.

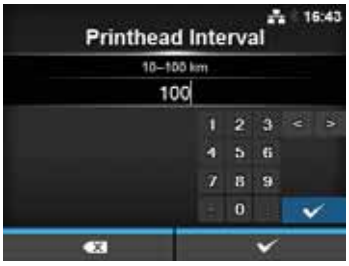

Change Cutter

System > Notifications > Change Cutter

Notify when the cutter unit needs to be replaced.
The setting items are as follows:

1	Change Cutter	Enable or disable the notification function about when the cutter unit needs to be replaced.
2	Cutter Life	Set the notification interval about when the cutter unit needs to be replaced.
3	Cutter Count	Shows the current number of cuts by the cutter.

Change Cutter

System > Notifications > Change Cutter > Change Cutter

Enable or disable the notification function about when the cutter unit needs to be replaced.
The options are as follows:

- **Enabled**: Enable the notification function.
- **Disabled**: Disable the notification function.

Cutter Life

System > Notifications > Change Cutter > Cutter Life

Set the notification interval about when the cutter unit needs to be replaced.
Available to change only if you have selected **Enabled** in the **Change Cutter** menu.
The printer shows the cutter count as the setting value.
The setting range is from 10 to 1000 Kcuts.

Change Platen

System > Notifications > Change Platen

Notify when the platen roller needs to be replaced.
The setting items are as follows:

1	Change Platen	Enable or disable the notification function about when the platen roller needs to be replaced.
2	Platen Interval	Set the notification interval about when the platen roller needs to be replaced.
3	Platen Count	Shows the current distance the platen roller has fed.

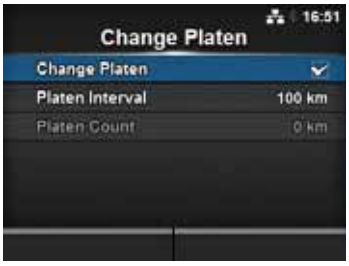

Change Platen

System > Notifications > Change Platen> Change Platen

Enable or disable the notification function about when the platen roller needs to be replaced.
The options are as follows:

- **Enabled**: Enable the notification function.
- **Disabled**: Disable the notification function.

Platen Interval

System > Notifications > Change Platen> Platen Interval

Set the notification interval about when the platen roller needs to be replaced.
Available to change only if you have selected **Enabled** in the **Change Platen** menu.
The printer shows the fed distance as the setting value.
The setting range is from 10 to 100 km.

Sound

System > Sound

Set the buzzer sound.
The setting item is as follows:

1	Error Sound	Set the buzzer volume for the error sound.

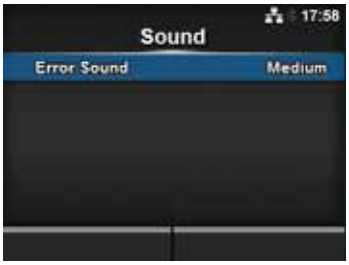

Error Sound

System > Sound > Error Sound

Set the buzzer volume for the error sound.
The options are as follows:

- **Off**: Mute the sound.
- **Low**: Low volume.
- **Medium**: Medium volume.
- **High**: High volume.

Energy Saving

System > Energy Saving

The setting items are as follows:

1	Sleep Timeout	Set the period before the printer enters sleep mode.

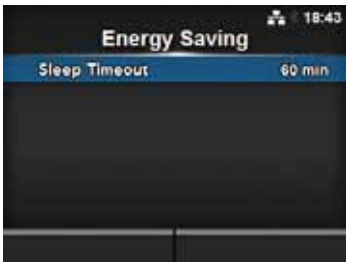

Sleep Timeout

System > Energy Saving > Sleep Timeout

Set the period before the printer enters sleep mode.
The setting range is from 0 to 60 minutes.

Note

- The sleep function is disabled if you set to 0.
- This setting is disabled if **External I/O on page 143** is set to Enable.

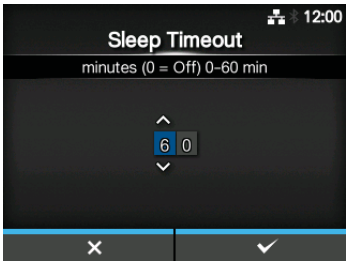

LCD Brightness

System > LCD Brightness

Set the brightness of the screen.
The setting range is from 0 to 9.
0 is the darkest and 9 is the brightest.
Press the right soft button to complete the setting.

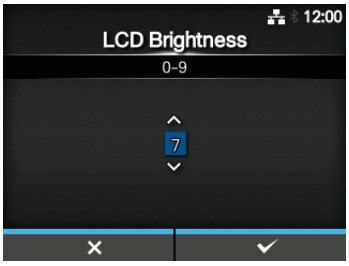

Note
The printer has a built-in energy saving function, which will decrease the brightness of the screen when you have not operated the printer for a period.

Show Total Count

System > Show Total Count

Enable or disable the indication of the total print count.
If set to **Enabled**, the total print count shows on both the Online and Offline screens.
The number in the brackets to the right of “QTY” is the total print count.
The options are as follows:

- **Enabled**: Enable the indication of the total print count.
- **Disabled**: Disable the indication of the total print count.

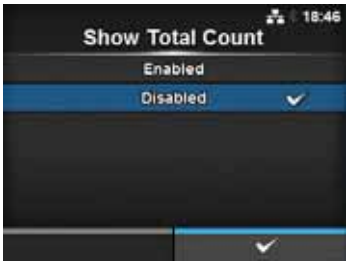

Note
Shows the total print count from the time the printer is on until it is off.
When you power off the printer, the count resets to 0.

Password

System > Password

The setting items are as follows:

1	Password Enable	Enable or disable the password setting.
2	Install Security	Enable or disable the password input for the package file download.
3	Change Password	Change the password.

Password Enable

System > Password > Password Enable

Enable or disable the password setting.
If you have set the password to **Enabled**, the printer requires you to enter the password set in the **Password** screen before you enter the **Settings** menu.
The options are as follows:

- **Enabled**: Enable the password setting.
- **Disabled**: Disable the password setting.

Note
The default password is 0310. You can change the password in *Password > Change Password > level1*

Install Security

System > Password > Install Security

Enable or disable the password input for installing the pkg file to the printer.
If you have set the password to Enabled, the printer requires you to enter the password set in the **Password** screen before you can download the package file.
The options are as follows:

- **Disabled**: No password is required to install a pkg file.
- **USB**: Password is required to install a pkg file from the USB memory.
- **Always**: Password is required to install a pkg file from the USB memory or downloaded from computer.

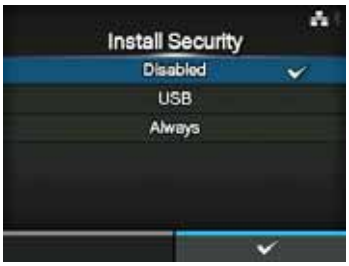

Note
The password used for installing a pkg file can be any passwords set in the *System > Password*.
Contact a SATO reseller or technical service center for more information of the pkg file.

Change Password

System > Password > Change Password

Change the password.
You can enter 4 to 32 characters including alphabet (capital and small letters), numbers and symbols.
The setting items are as follows:

- **admin**: This is the setting item for factory.
  Strictly for SATO authorized personnel use.
- **manager**: The password for accessing the **Service** menu.
- **level1**: The password for accessing the **Setting** menu.
- **rfid**: This is the setting item for factory.
  Strictly for SATO authorized personnel use.

Note
The admin, manager and rfid passwords are for factory and maintenance personnel. You cannot change these passwords.

Reset Passwords
If you have forgotten the customized password, you can reset it back to the default password.

1. Power off the printer.
2. Press and release the ⏻ power button while pressing and holding the ↩ back button, ◀ and ▶ buttons simultaneously until the online/offline screen shows.
   All the passwords are reset to default passwords.

Note
This key sequence allows users to access the settings menu with the default passwords as a temporary solution.
After accessing the settings menu with the default password, you must customize the password again.

4.4.5 Tools Menu

In the **Tools** menu, there are setting items as follows:

Tools			
1	Test Print	Perform a test print.	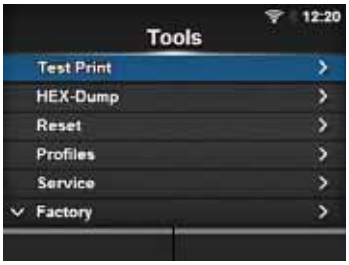
2	HEX-Dump	Save the hex dump print data or dump data from the receive buffer to the USB memory.	
3	Reset	Initialize the configuration or counter of the printer.	
4	Profiles	Utilize the printer configurations as profiles.	
5	Service	These are the setting items for service. Strictly for SATO authorized service personnel use.	
6	Factory	These are the setting items for factory. Strictly for SATO factory personnel use.	
7	Certificates	Set the wireless LAN authentication. * Available only if you have installed the USB memory.	
8	Startup Guide	Enable or disable the startup guide.	

Test Print			
Tools > Test Print Perform a test print. The setting items are as follows:			
1	Factory	Perform the factory test print.	
2	Configure List	Print the configuration information of the printer.	
3	Configure QR	Print the configuration information with a QR code.	
4	Paper Sensor	Print the detection result of the media sensor level.	

Factory

Tools > Test Print > Factory

Perform the factory test print.

1. Check and set the items as listed on the **Factory** menu.
2. Press the right soft button to start the test print. Press the right soft button again to pause the print.

To stop the test print, first pause the print and then press the ↩ button.

The setting items are as follows.

1	Label Width	Shows the necessary media width of the test print. The necessary media width is 101.6 mm (4”) for **Large**.
2	Pitch	Set the print position in the vertical direction. The setting range is as follows: The setting range varies depending on the print resolution of the printer. **<CL4NX>** • 203 dpi: -30 to 0 to 30 dots • 305 dpi: -45 to 0 to 45 dots • 609 dpi: -90 to 0 to 90 dots **<CL6NX>** • 203 dpi: -30 to 0 to 30 dots • 305 dpi: -45 to 0 to 45 dots When you decrease the setting value, the print position moves in the feed direction (toward the front part of the media). When you increase the setting value, the print position moves opposite the feed direction (toward the end part of the media).
3	Offset	Set the stop position of the media. The setting range is as follows: The setting range varies depending on the print resolution of the printer. **<CL4NX>** • 203 dpi: -30 to 0 to 30 dots • 305 dpi: -45 to 0 to 45 dots • 609 dpi: -90 to 0 to 90 dots **<CL6NX>** • 203 dpi: -30 to 0 to 30 dots • 305 dpi: -45 to 0 to 45 dots When you decrease the setting value, the stop position moves in the feed direction (toward the front part of the media). When you increase the setting value, the stop position moves opposite the feed direction (toward the end part of the media).
4	Darkness Adjust	Fine tune the print darkness of the test print. 0 is the lightest and 99 is the darkest.

Note

The value of **Pitch**, **Offset** and **Darkness Adjust** set in the **Factory** menu will reflect to the same item settings in the **Configure List** menu, **Configure QR** menu and **Paper Sensor** menu.

Configure List

Tools > Test Print > Configure List

Print the configuration information of the printer.

1. Check and set the items as listed on the **Configure List** menu.
   The setting items are as follows.
2. Press the right soft button to start the test print. Press the right soft button again to pause the print.

To stop the test print, first pause the print and then press the ↩ button.

1	Label Width	Shows the necessary media width of the test print. The necessary media width is 50.8 mm (2”) for **Small**.
2	Label Length	Set the length of one piece of the media used for the test print. The setting range is as follows: The setting range varies depending on the print resolution of the printer. **<CL4NX>** • 203 dpi: 400 to 1600 dots • 305 dpi: 600 to 1800 dots • 609 dpi: 1200 to 3600 dots **<CL6NX>** • 203 dpi: 400 to 1600 dots • 305 dpi: 600 to 1800 dots
3	Pitch	Set the print position in the vertical direction. The setting range is as follows: The setting range varies depending on the print resolution of the printer. **<CL4NX>** • 203 dpi: -30 to 0 to 30 dots • 305 dpi: -45 to 0 to 45 dots • 609 dpi: -90 to 0 to 90 dots **<CL6NX>** • 203 dpi: -30 to 0 to 30 dots • 305 dpi: -45 to 0 to 45 dots When you decrease the setting value, the print position moves in the feed direction (toward the front part of the media). When you increase the setting value, the print position moves opposite the feed direction (toward the end part of the media).

Note
The value of **Label Length**, **Pitch**, **Offset** and **Darkness Adjust** set in the **Configure List** menu will reflect to the same item settings in the **Factory** menu, **Configure QR** menu and **Paper Sensor** menu.

Configure List			
4	Offset	Set the stop position of the media. The setting range is as follows: The setting range varies depending on the print resolution of the printer. **<CL4NX>** • 203 dpi: -30 to 0 to 30 dots • 305 dpi: -45 to 0 to 45 dots • 609 dpi: -90 to 0 to 90 dots **<CL6NX>** • 203 dpi: -30 to 0 to 30 dots • 305 dpi: -45 to 0 to 45 dots When you decrease the setting value, the stop position moves in the feed direction (toward the front part of the media). When you increase the setting value, the stop position moves opposite the feed direction (toward the end part of the media).	
5	Darkness Adjust	Fine tune the print darkness of the test print. 0 is the lightest and 99 is the darkest.	

Configure QR			
Tools > Test Print > Configure QR Print the configuration information with a QR code. 1. Check and set the items as listed on the **Configure QR** menu. The setting items are as follows. 2. Press the right soft button to start the test print. Press the right soft button again to pause the print. **To stop the test print,** first pause the print and then press the ↩ button.			
1	Label Width	Shows the necessary media width of the test print. The necessary media width is 50.8 mm (2”) for **Small**.	

Configure QR			
2	Label Length	Set the length of one piece of the media used for the test print. The setting range is as follows: The setting range varies depending on the print resolution of the printer. **<CL4NX>** • 203 dpi: 400 to 1600 dots • 305 dpi: 600 to 1800 dots • 609 dpi: 1200 to 3600 dots **<CL6NX>** • 203 dpi: 400 to 1600 dots • 305 dpi: 600 to 1800 dots	**Note** The value of **Label Length**, **Pitch**, **Offset** and **Darkness Adjust** set in the **Configure QR** menu will reflect to the same item settings in the **Factory** menu, **Configure List** menu and **Paper Sensor** menu.
3	Pitch	Set the print position in the vertical direction. The setting range is as follows: The setting range varies depending on the print resolution of the printer. **<CL4NX>** • 203 dpi: -30 to 0 to 30 dots • 305 dpi: -45 to 0 to 45 dots • 609 dpi: -90 to 0 to 90 dots **<CL6NX>** • 203 dpi: -30 to 0 to 30 dots • 305 dpi: -45 to 0 to 45 dots When you decrease the setting value, the print position moves in the feed direction (toward the front part of the media). When you increase the setting value, the print position moves opposite the feed direction (toward the end part of the media).	
4	Offset	Set the stop position of the media. The setting range is as follows: The setting range varies depending on the print resolution of the printer. **<CL4NX>** • 203 dpi: -30 to 0 to 30 dots • 305 dpi: -45 to 0 to 45 dots • 609 dpi: -90 to 0 to 90 dots **<CL6NX>** • 203 dpi: -30 to 0 to 30 dots • 305 dpi: -45 to 0 to 45 dots When you decrease the setting value, the stop position moves in the feed direction (toward the front part of the media). When you increase the setting value, the stop position moves opposite the feed direction (toward the end part of the media).	
5	Darkness Adjust	Fine tune the print darkness of the test print. 0 is the lightest and 99 is the darkest.	

Paper Sensor

Tools > Test print > Paper Sensor

Print the detection result of the media sensor level.

1. Check and set the items as listed on the **Paper Sensor** menu.
   The setting items are as follows.
2. Press the right soft button to start the test print. Press the right soft button again to pause the print.

To stop the test print, first pause the print and then press the ↩ button.

1	Label Width	Shows the necessary media width of the test print. The necessary media width is 101.6 mm (4”) for **Large** and 50.8 mm (2”) for **Small**.
2	Label Length	Set the length of one piece of the media used for the test print. The setting range is from 400 to 1600 dots.
3	Pitch	Set the print position in the vertical direction. The setting range is as follows: The setting range varies depending on the print resolution of the printer. **<CL4NX>** • 203 dpi: -30 to 0 to 30 dots • 305 dpi: -45 to 0 to 45 dots • 609 dpi: -90 to 0 to 90 dots **<CL6NX>** • 203 dpi: -30 to 0 to 30 dots • 305 dpi: -45 to 0 to 45 dots When you decrease the setting value, the print position moves in the feed direction (toward the front part of the media). When you increase the setting value, the print position moves opposite the feed direction (toward the end part of the media).

Note
The value of **Label Length**, **Pitch**, **Offset** and **Darkness Adjust** set in the **Paper Sensor** menu will reflect to the same item settings in the **Factory** menu, **Configure List** menu and **Configure QR** menu.

Paper Sensor			
4	Offset	Set the stop position of the media. The setting range is as follows: The setting range varies depending on the print resolution of the printer. **<CL4NX>** • 203 dpi: -30 to 0 to 30 dots • 305 dpi: -45 to 0 to 45 dots • 609 dpi: -90 to 0 to 90 dots **<CL6NX>** • 203 dpi: -30 to 0 to 30 dots • 305 dpi: -45 to 0 to 45 dots When you decrease the setting value, the stop position moves in the feed direction (toward the front part of the media). When you increase the setting value, the stop position moves opposite the feed direction (toward the end part of the media).	
5	Darkness Adjust	Fine tune the print darkness of the test print. 0 is the lightest and 99 is the darkest.	

HEX-Dump			
Tools > HEX-Dump Save the hex dump print data or dump data from the receive buffer to the USB memory. The setting items are as follows:			
1	Hex Dump Mode	Enable or disable the Hex Dump mode.	
2	Buffer Dump	Save the receive buffer data to the printer.	
3	Log Files	Manage the log files of the printer.	

Hex Dump Mode

Tools > HEX-Dump > Hex Dump Mode

Enable or disable the Hex Dump mode.
If you set the Hex Dump mode to **Enabled**, the printer prints the received data and at the same time creates a file of the received data inside “hexdump/”.
When you return the setting to **Disabled**, you can check the file on the screen.

Note

- If you set the Hex Dump mode to **Enabled**, the design of the Online/Offline screen changes.
- You can save a maximum of ten received data files for each type of interface. Depending on the file size, the number of files you can save will be less than ten.
- The details of the files created inside “hexdump/” are as follows:
  - **BT00xx.bin**: Received data through Bluetooth.
  - **LAN00xx.bin**: Received data through LAN.
  - **LPT00xx.bin**: Received data through IEEE1284.
  - **SCI00xx.bin**: Received data through RS-232C.
  - **USB00xx.bin**: Received data through USB.

Buffer Dump

Tools > HEX-Dump > Buffer Dump

Save the receive buffer data to the printer.
Available only if you have set to **Disabled** in the **Hex Dump Mode** menu.
Press the **START** (right soft) button on the startup screen to save the data to the printer.
Save the receive buffer data to “buff/”.

Note

- The data files of the receive buffer are created for each type of interface.
- The details of the file created inside “buff/” are as follows:
  - **BT0001.bin**: The contents of the receive buffer for Bluetooth.
  - **LAN0001.bin**: The contents of the receive buffer for LAN.
  - **LPT0001.bin**: The contents of the receive buffer for IEEE1284.
  - **SCI0001.bin**: The contents of the receive buffer for RS-232C.
  - **USB0001.bin**: The contents of the receive buffer for USB.
- If you perform the **Buffer Dump** again, the existing file will be overwritten.

Log Files

Tools > HEX-Dump > Log Files

The setting items are as follows:

1	Copy	Copy the log files of the printer to the USB memory. * Available only if you have installed the USB memory.
2	Remove	Delete the log files of the printer.
3	Print	Print a hex dump of the log files of the printer.

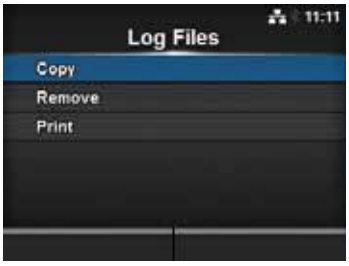

Copy

Tools > HEX-Dump > Log Files > Copy

Copy the log files of the printer to the USB memory.
Available only if you have installed the USB memory.
The procedure to copy the log files is as follows:

1. Select the file type to copy and press the ↵ button.
   - **buff/**: The buffer data saved after you perform the **Buffer Dump**.
   - **hexdump/**: The received data created through **Hex Dump Mode**.
2. Select the file to copy and press the ↵ button. A checkmark shows on the right side of the file name.
3. After you select the file, press the right soft button to copy the selected file to the USB memory.

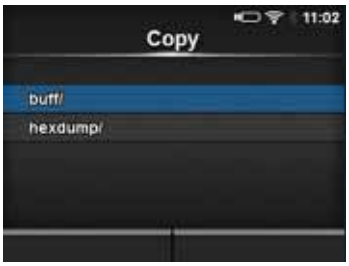

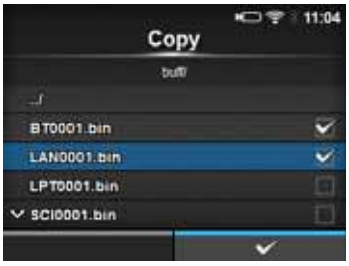

Remove

Tools > HEX-Dump > Log Files > Remove

Delete the log files of the printer.
The procedure to delete the log files is as follows:

1. Select the file type to delete and press the ↵ button.
   - **buff/**: The buffer data saved after you perform the **Buffer Dump**.
   - **hexdump/**: The received data created through **Hex Dump Mode**.
2. Select the file to delete and press the ↵ button. A checkmark shows on the right side of the file name.
3. After you select the file, press the right soft button to delete the selected file.

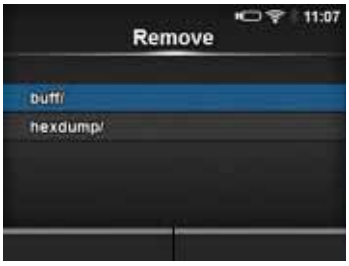

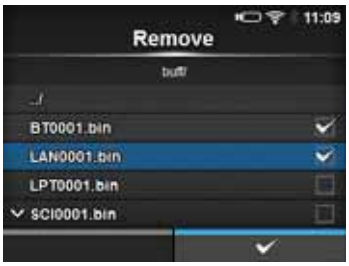

Print

Tools > HEX-Dump > Log Files > Print

Print a hex dump of the log files of the printer.
The procedure to print the log files is as follows:

1. Select the file type to print.
   - **buff/**: The buffer data saved after you perform the **Buffer Dump**.
   - **hexdump/**: The received data created through **Hex Dump Mode**.
2. Select the file to print and press the ↵ button or right soft button to perform the dump print.

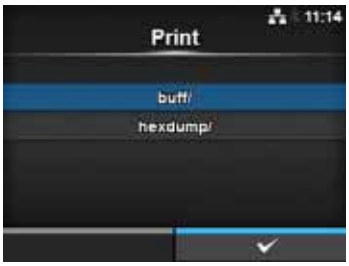

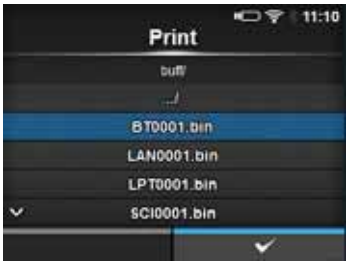

CAUTION
Printing the contents of the file may use a lot of media.

Reset

Tools > Reset

Enter the screen for selecting the items to be initialized.

Select

Tools > Reset > Select

Select the items to be initialized.
The items are as follows:

1	Data	Initialize the data saved in the printer.
2	Data & Settings	Initialize the data and setting values of the printer.
3	Settings	Initialize the setting values of the printer.

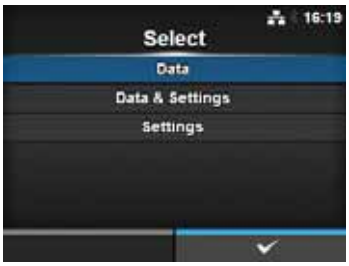

Data

Tools > Reset > Select > Data

Initialize the data saved in the printer.
The data to be initialized are the fonts and graphics registered in the printer.
When you select **Data**, the confirmation screen shows.
Press the left soft button to cancel or right soft button to perform the initialization.
The printer will reboot after reset.

CAUTION
It is generally not necessary to perform the initialization. Doing so could change the print conditions.

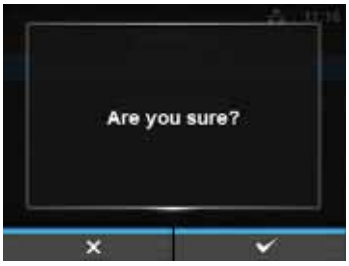

Data & Settings

Tools > Reset > Select > Data & Settings

Initialize the data and setting values of the printer.
Select the setting items to be initialized.
The options are as follows:

- **User Reset**: Initialize the data and setting values.
- **User Reset (-Interface)**: Initialize the data and setting values that are not included in the **Interface** menu.
- **Factory Reset**: Initialize to the status after factory shipment.
- **Factory Reset (-Interface)**: Initialize the items that are not included in the **Interface** menu to the status after factory shipment.
- **Interface**: Initialize the data and setting values in the **Interface** menu.
- **Printing**: Initialize the data and setting values in the **Printing** menu.

Select the item to be initialized using the ▲/▼ buttons, then press the right soft button to perform the initialization.
The confirmation screen shows.
Press the left soft button to cancel or right soft button to perform the initialization.
The printer will reboot after reset.

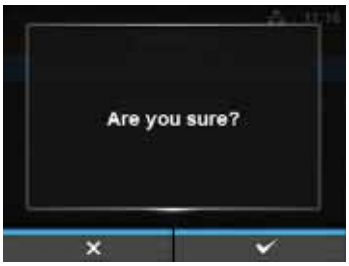

Refer to **Section 7.1 List of Initial Values** for the initial value of each setting items.

Note
The data to be initialized are the fonts and graphics registered in the printer.

Settings

Tools > Reset > Select > Settings

Select the setting items to be initialized.
The options are as follows:

- **User Reset**: Initialize the setting values.
- **User Reset (-Interface)**: Initialize the setting values that are not included in the **Interface** menu.
- **Factory Reset**: Initialize to the status after factory shipment.
- **Factory Reset (-Interface)**: Initialize the items that are not included in the **Interface** menu to the status after factory shipment.
- **Interface**: Initialize the setting values in the **Interface** menu.
- **Printing**: Initialize the setting values in the **Printing** menu.

Select the item to be initialized using the ▲/▼ buttons, then press the right soft button to perform the initialization.
The confirmation screen shows.
Press the left soft button to cancel or right soft button to perform the initialization.

Refer to **Section 7.1 List of Initial Values** for the initial value of each setting item.

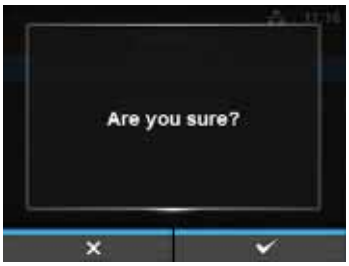

Profiles

Tools > Profiles

Maintain the customized profile of the printer configurations.
The name of the last loaded profile is shown in the parenthesis.
The setting items are as follows:

1	Delete	Delete the profile of the printer. *Not available if no profile is saved.
2	Load	Load the profile of the printer. *Not available if no profile is saved.
3	Save	Save the current printer configurations as a new profile.
4	Start with	Select the profile to load at printer startup. *Not available if no profile is saved.

Delete

Tools > Profiles > Delete

Delete the profile of the printer.
The procedure to delete the profile is as follows:

1. Select the profile to be deleted using the ▲/▼ buttons.
2. Press the ↵ button or press the right soft button to confirm.
   The profile name is deleted from the list.

Load

Tools > Profiles > Load

Load the profile of the printer.
The procedure to load the profile is as follows:

1. Select the profile to be loaded using the ▲/▼ buttons.
2. Press the ↵ button or press the right soft button to confirm.
   A checkmark shows on the right side of the loaded profile name. And the name of the loaded profile is shown on the **Profiles** menu in parenthesis.

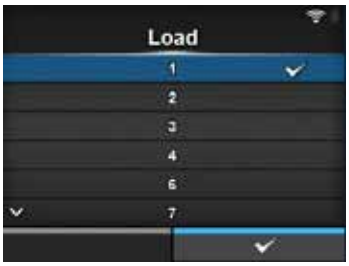

Save

Tools > Profiles > Save

Save the current printer configurations as a new profile.
The screen shows a list of the profiles saved in the printer. If no profile is saved, the screen shows an empty list.

To save existing printer configurations as a new profile, press the left soft button and enter the name of the profile.
You can enter a maximum of thirty-two characters including alphabet (upper case and lower case), numbers and symbols.
Press the right soft button to confirm.
The new profile name is shown on the list and is loaded.

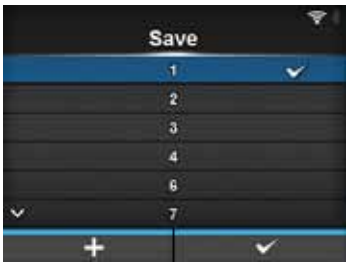

Start with

Tools > Profiles > Start with

Select the profile to be loaded at printer startup.
The procedure to load the profile at printer startup is as follows:

1. Select the profile to be loaded at printer startup using the ▲/▼ buttons.
2. Press the ↵ button or press the right soft button to confirm.

Certificates

Tools > Certificates

Install certificates used for Wi-Fi authentication and for HTTPS.
Available only if you have installed the USB memory.
The setting items are as follows:

1	HTTPS	Installs the HTTPS certificates from the USB memory.
2	Wi-Fi Root CA	Installs the Wi-Fi Root CA certificates from the USB memory.
3	Wi-Fi Client	Installs the Wi-Fi client certificates from the USB memory.
4	Wi-Fi Private Key	Installs the Wi-Fi private key from the USB memory.
5	EAP-FAST PAC File	Installs the EAP-FAST PAC file from the USB memory.

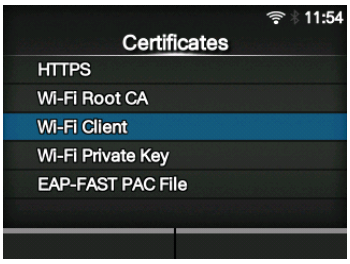

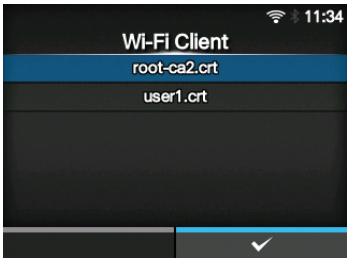

The procedure to install the certificates and PAC files is as follows:

1. Save the certificate files to the USB thumb drive memory's root folder.
   Acceptable file extensions are:
   .pem, .crt, .cer, .der for Root CA and client certificate in PEM or DER format.
   .pfx and .p12 for client certificates in PKCS #12 format.
   .prv and .key for private keys in PEM/PKCS#8 format.
   .pac for PAC files.
2. Insert the USB thumb drive memory into the USB connector (Type A).
3. Go to the **Settings** > **Tools** > **Certificates** menu.
4. Select the certificate you want to install. Refer to the table above.
5. Select the certificate file from the list.

Startup Guide	
Tools > *Startup Guide* Enable or disable the startup guide. The options are as follows: • **Enabled**: Enable the startup guide. • **Disabled**: Disable the startup guide. If you have selected **Enabled** in the **Startup Guide** menu, the startup guide shows the next time you power on the printer.	

4.4.6 Information Menu

In the **Information** menu, there are setting items as follows:

Information			
1	Help	Shows the guidance video.	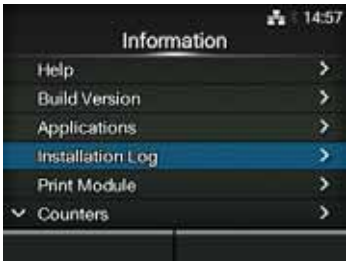
2	Build Version	Shows the firmware version.	
3	Applications	Shows various application versions.	
4	Installation Log	Shows the installation log data. *Shows only if there is a log data in the printer.	
5	Print Module	Shows the print module information.	
6	Counters	Shows the counter information.	
7	IPv4 Address	Shows the IPv4 address.	
8	IPv6 Address	Shows the IPv6 address.	
9	LAN MAC	Shows the MAC address of the LAN. *Shows only if the LAN interface is selected.	
10	Wi-Fi MAC	Shows the MAC address of the wireless LAN. *Shows only if the optional wireless LAN is installed and the Wi-Fi interface is selected.	
11	Wi-Fi Region	Shows the region information of the wireless LAN. *Shows only if the optional wireless LAN is installed and the Wi-Fi interface is selected.	
12	Wi-Fi Status	Shows the status of the wireless LAN. *Shows only if the optional wireless LAN is installed and the Wi-Fi interface is selected.	
13	Wi-Fi Direct	Shows the connection information of the Wi-Fi Direct. *Shows only if connected to the Wi-Fi Direct.	
14	Wi-Fi Versions	Shows the version of the wireless LAN. *Shows only if the optional wireless LAN is installed and the Wi-Fi interface is selected.	

Help

Information> Help

Shows the guidance video.

You can view the video for loading the media and ribbon, the cleaning method and replacement method of consumables. For the video list and playback method, refer to **Section 4.1.4 Guidance Video**.
The list of videos are as follows:

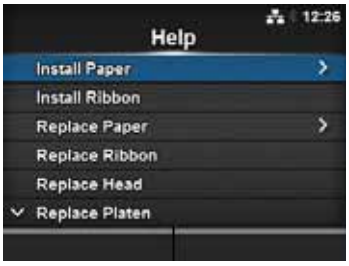

1	Install Paper	Shows the video for loading the media.
2	Install Ribbon	Shows the video for loading the ribbon.
3	Replace Paper	Shows the video for replacing the media.
4	Replace Ribbon	Shows the video for replacing the ribbon.
5	Replace Head	Shows the video for replacing the print head.
6	Replace Platen	Shows the video for replacing the platen roller.
7	Cleaning	Shows the video of the cleaning method.

Install Paper

Information > Help > Install Paper

Shows the video for loading the media.
The setting items are as follows:

1	Roll	Shows the video for loading the media roll.
2	Fanfold	Shows the video for loading the fan-fold media.

Roll

Information > Help > Install Paper > Roll

Shows the video for loading the media roll.
The setting items are as follows:

1	Standard	Shows the video for loading the media roll to a standard printer.
2	Cutter	Shows the video for loading the media roll to a printer installed with a cutter.
3	Linerless (CL4NX only)	Shows the video for loading the media roll to a printer installed with a linerless kit.
4	Dispenser	Shows the video for loading the media roll to a printer installed with a dispenser.
5	Dispenser with Rewinder	Shows the video for loading the media roll to a printer installed with a dispenser and liner rewinder.

Fanfold

Information > Help > Install Paper > Fanfold

Shows the video for loading the fan-fold media.
The setting items are as follows:

1	Standard	Shows the video for loading the fan-fold media to a standard printer.
2	Cutter	Shows the video for loading the fan-fold media to a printer installed with a cutter.

Replace Paper

Information > Help > Replace Paper

Shows the video for replacing the media.
The setting items are as follows:

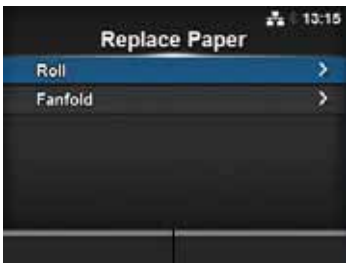

1	Roll	Shows the video for replacing the media roll.
2	Fanfold	Shows the video for replacing the fan-fold media.

Roll

Information > Help > Replace Paper > Roll

Shows the video for replacing the media roll.
The setting items are as follows:

1	Standard	Shows the video for replacing the media roll in a standard printer.
2	Cutter	Shows the video for replacing the media roll in a printer installed with a cutter.
3	Linerless (CL4NX only)	Shows the video for replacing the media roll to a printer installed with a linerless kit.
4	Dispenser	Shows the video for replacing the media roll in a printer installed with a dispenser.
5	Dispenser with Rewinder	Shows the video for replacing the media roll in a printer installed with a dispenser and liner rewinder.

Fanfold

Information > Help > Replace Paper > Fanfold

Shows the video for replacement of fan-fold media.
The setting items are as follows:

1	Standard	Shows the video for replacing the fan-fold media in a standard printer.
2	Cutter	Shows the video for replacing the fan-fold media in a printer installed with a cutter.

Build Version

Information > Build Version

Shows the information and version of this printer.

1	Name	Shows the name of the build version.
2	Date	Shows the date of the build version.
3	Checksum	Shows the checksum of the build version.
4	Kernel Version	Shows the kernel version.
5	Boot Version	Shows the boot version.

Kernel Version

Information > Build Version > Kernel Version

Shows the kernel version of this printer.

Boot Version

Information > Build Version > Boot Version

Shows the boot version of this printer.
The setting items are as follows:

1	Disks	Shows the Disks.
2	Warp!!-mode	A checked box shows enabled while an unchecked box shows disabled.
3	Date	Shows the build date of the boot version.

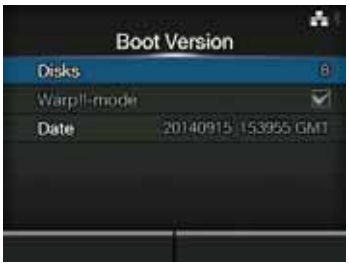

Applications

Information > Applications

Shows the versions of the installed applications in the printer, such as printer languages.

Installation Log

Information > Installation Log

Show or clear the installation log data in this printer.
The setting items are as follows:

1	RPM Log	Shows the RPM log data.
2	System Restore	Shows the system restore log data.

Press CLEAR to clear the selected log data.

Note
This screen is not shown if there is no log data in the printer.

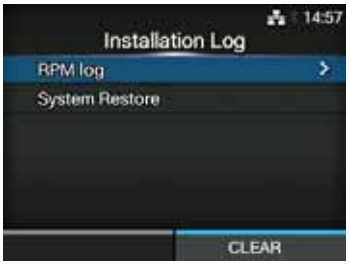

RPM Log

Information > Installation Log > RPM Log

Shows a list of RPM log files containing three sections: installed, updated and obsolete.
The RPM log file is created after installing a pkg-file containing rpm-files.
Press the right soft button to clear the selected RPM log file.

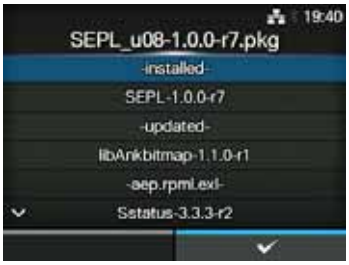

System Restore

Information > Installation Log > System Restore

Shows the system restore log.

The system restore log file is created after installing a pkg-file that incurs the inability to operate the printer LCD.

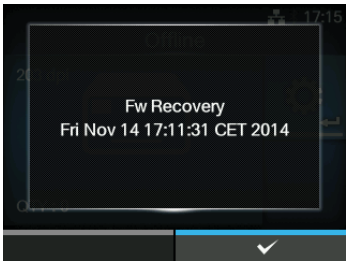

Print Module

Information > Print Module

Shows the information about the print module of this printer.
The setting items are as follows:

1	Boot	Shows the Boot firmware version.
2	Main	Shows the Main firmware version.

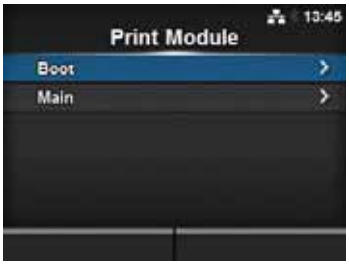

Boot

Information > Print Module > Boot

1	Name	Shows the Boot firmware name.
2	Release Date	Shows the Boot firmware release date.
3	Checksum	Shows the Boot firmware checksum.

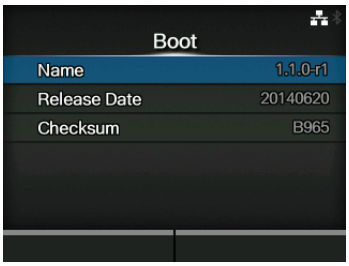

Main

Information > Print Module > Main

1	Name	Shows the Main firmware name.
2	Release Date	Shows the Main firmware release date.
3	Checksum	Shows the Main firmware checksum.

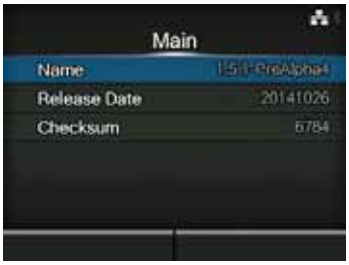

Counters

Information > Counters

Shows the counter information of this printer.
The setting items are as follows:

1	Head	Shows the head counter information of this printer.
2	Cutter	Shows the current number of cuts.

CAUTION
Only SATO authorized service personnel are permitted to clear the counter.

Head

Information > Counters > Head

Shows the head counter information of this printer.

1	Life	Shows the current print distance.
2	Head 1	Head 1 shows the current print distance. When you replace the print head, the head counter of Head 1 is added to Head 2 and Head 1 will start to count from 0 again.
3	Head 2	
4	Head 3	

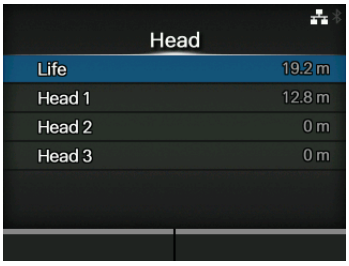

IPv4 Address

Information > IPv4 Address

Shows the IPv4 address.

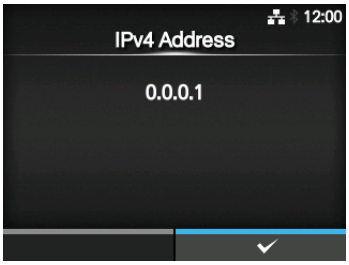

IPv6 Address

Information > IPv6 Address

Shows the IPv6 address.

Note
When Wi-Fi Direct is active, this IPv6 address screen is not shown.

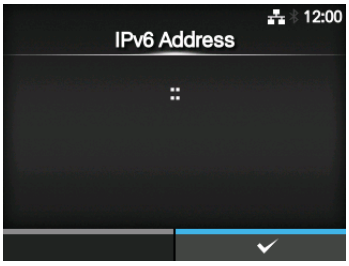

LAN MAC

Information > LAN MAC

Shows the MAC address of the LAN.
Shows only if LAN is the active interface.

Wi-Fi MAC

Information > Wi-Fi MAC

Shows the MAC address of the wireless LAN.
Shows only if you have installed the optional wireless LAN and Wi-Fi is the active interface.

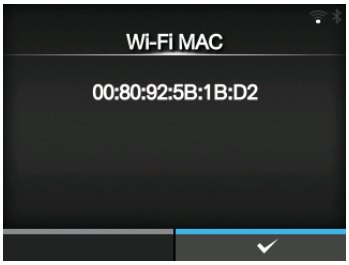

Wi-Fi Region

Information > Wi-Fi Region

Shows the region information of the wireless LAN.
Shows only if you have installed the optional wireless LAN and Wi-Fi is the active interface.

Wi-Fi Status

Information > Wi-Fi Status

Shows the status of the wireless LAN.
Shows only if you have installed the optional wireless LAN and Wi-Fi is the active interface.

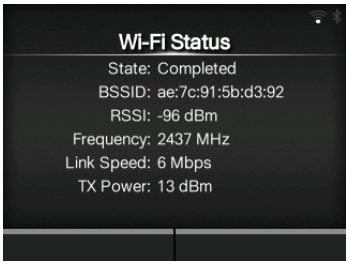

Wi-Fi Direct

Information > Wi-Fi Direct

Shows the connection information of the Wi-Fi Direct.
Shows only if Wi-Fi is the active interface and you are connected to the Wi-Fi Direct.

Wi-Fi Versions

Information > Wi-Fi Versions

Shows the version of the wireless LAN.
Shows only if you have installed the optional wireless LAN.

4.5 Web Configuration

The printer can be operated through a web configuration page using any browser.
With an Ethernet LAN or WLAN connection, users can remotely get information from the printer or perform the printer configuration.
You need the printer IP address to access the web configuration page. Refer to **Section 4.4.6 Information Menu** for the printer IP address.
If the printer IP address is 192.168.143.123, open up browser and enter the following URL:
https://192.168.143.123
When a security certificate is prompted, you must acknowledge and click Continue.
The web configuration page will be shown as follows.
On the upper right of each page, the model name, current resolution and MAC address are shown.

4.5.1 Dashboard

The Dashboard, which consists of smaller sections, is the default page of WebConfig. Each section shows specific information or status of the printer.
You can view Dashboard and Certificates pages without logging in.
However, login is required to view Settings and Tools pages.

Printer Status shows the current state (online, offline error) and current status icons.

Printing shows the print speed, darkness, sensor, print mode and backfeed setting.

Device Info shows the model, current resolution and options that are installed.

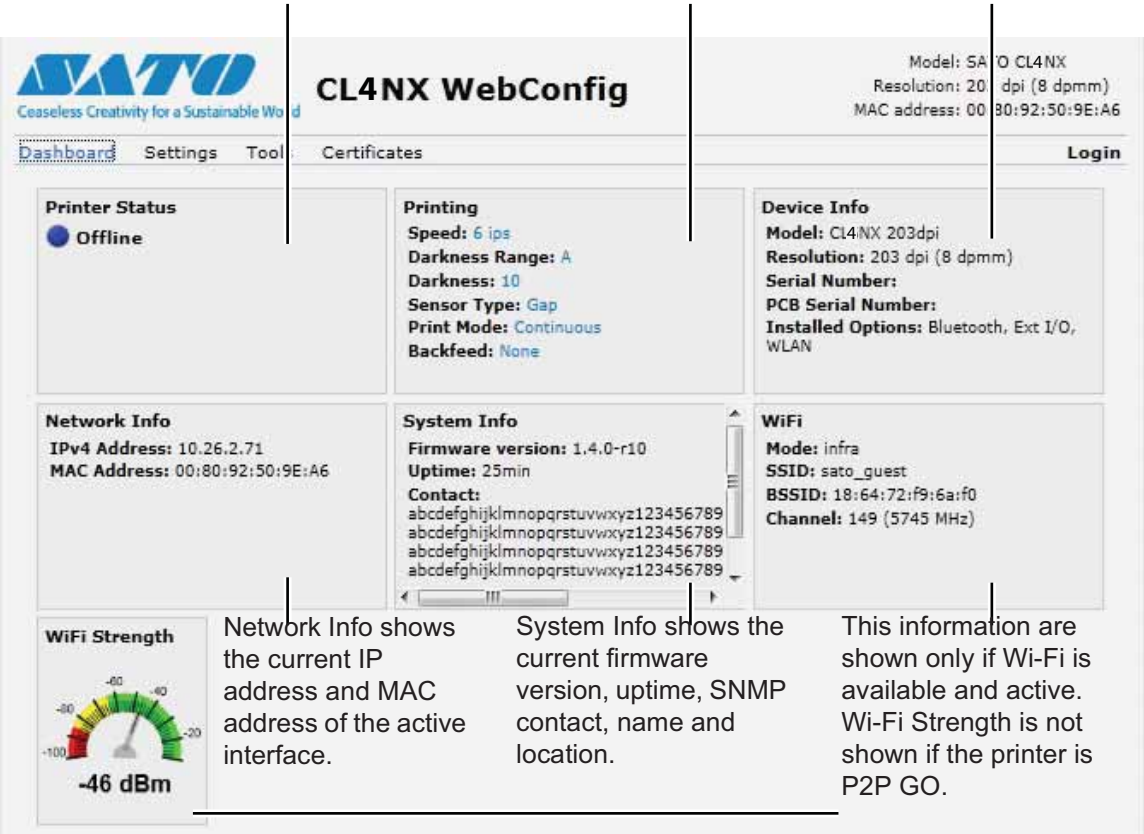

Network Info shows the current IP address and MAC address of the active interface.

System Info shows the current firmware version, uptime, SNMP contact, name and location.

This information are shown only if Wi-Fi is available and active. Wi-Fi Strength is not shown if the printer is P2P GO.

4.5.2 Settings

Login is required to view this page. Click Login and then enter the correct password to log in.
The default password for the username *settings* is *0310.*

After logging in, the following page will be shown:

These six setting items are also available on the printer through the LCD screens. For details, refer to **Section 4.4 Details of the Settings Menu Screen**.
Click on any icon on this Settings page to perform the settings.
The following page will be shown after clicking on Printing:

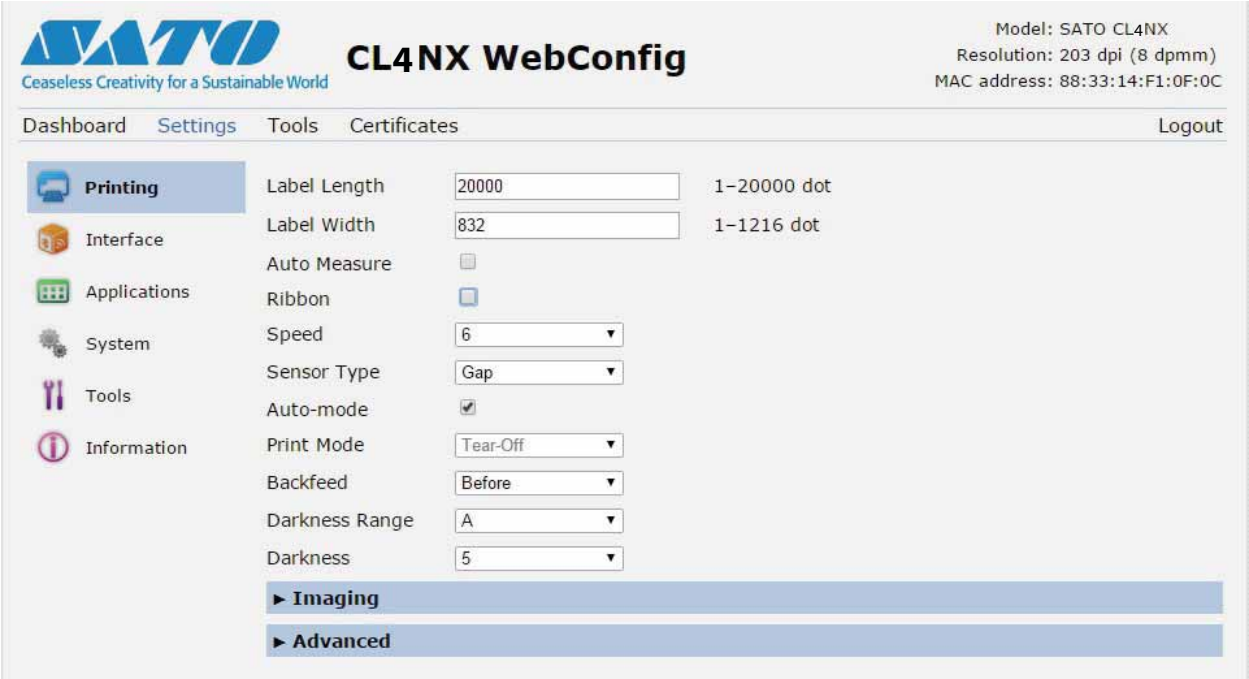

Printing
Refer to **Section 4.4.1 Printing Menu**.

Interface
Refer to **Section 4.4.2 Interface Menu**.

Applications
Refer to **Section 4.4.3 Applications Menu**.

System
Refer to **Section 4.4.4 System Menu**.

Tools
Refer to **Section 4.4.5 Tools Menu**.

Information
Refer to **Section 4.4.6 Information Menu**.

4.5.3 Tools

Login is required to view this page. Click Login and then enter the correct password to log in as in **Section 4.5.2 Settings**.
The default password for the username *settings* is *0310.*
After logging in, the following page will be shown:

Upload
Refer to **Certificates on page 193**.

Clone
Refer to **Section 2.3.1 Tools Menu** of the CL4NX/CL6NX service manual.

Install Package
Refer to **Section 2.5 Downloading Firmware** of the CL4NX/CL6NX service manual.

Logs
Lists all log files in the log directory. Users can click to download the file.

Reset
Refer to **Select on page 189**.

Passwords
Refer to **Change Password on page 178**.

Test Print
Refer to **Test Print on page 179**.

Support Info
List various information of the printer such as attached options, serial number, application versions and settings configuration.

4.5.4 Certificates

Shows the Root Certificate authority and client certificates installed on the printer.

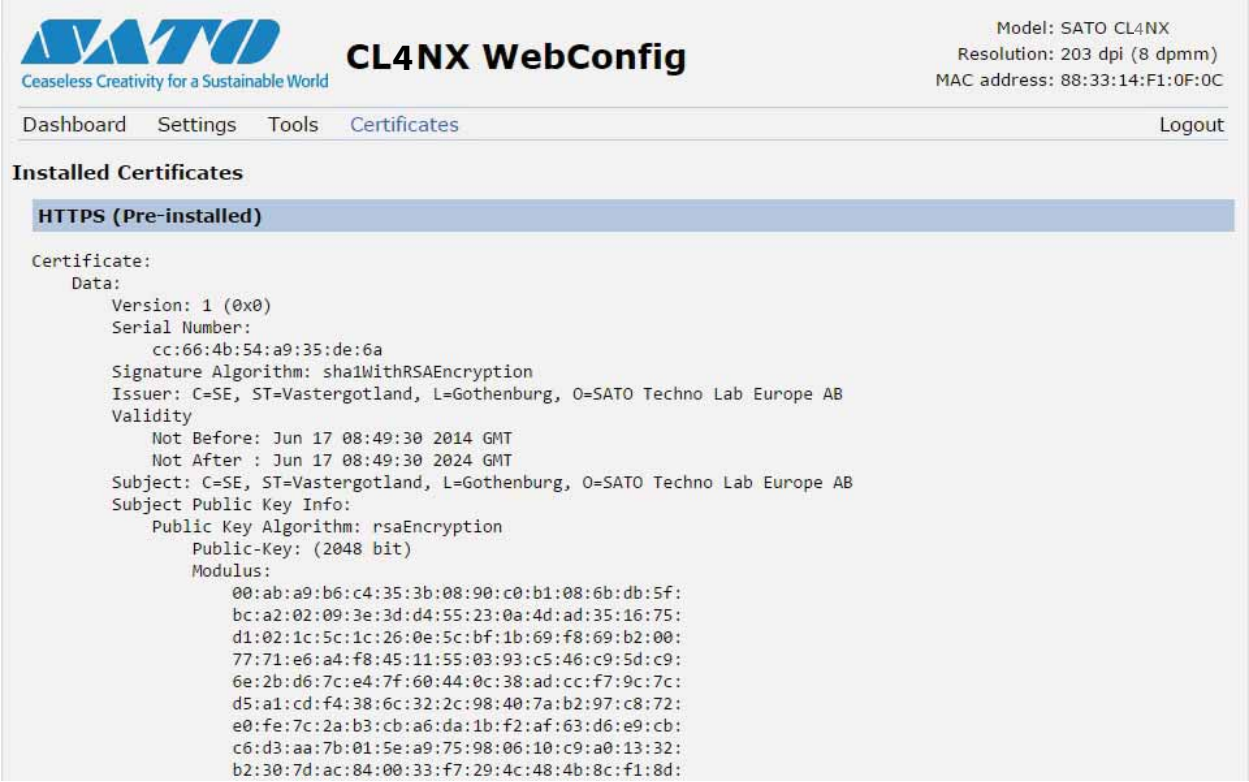

Note

The client certificate that is a PFX (PKCS #12) file will not be shown.

5 Cleaning and Performing Printer Adjustments

5.1 Maintenance

A dirty print head or platen roller not only affects the print quality but also causes printing errors. Use a cleaning kit or cleaning sheet to clean the printer regularly.

⚠ CAUTION

- Do not touch the power button, connect or disconnect the power cord while your hands are wet. Doing so could cause an electric shock.
- Disconnect the power cord from the AC outlet before you begin cleaning.
  The print head and its surroundings are hot after printing. Wait until the printer cools down.
- Touching the edge of the print head with your bare hand could cause injury.
- Use a cleaning pen, cotton swab or cotton cloth from a cleaning kit to clean. Do not clean with a hard object. Doing so could cause damage.
- Remove the media and ribbon before cleaning.

⚠ CAUTION for CL4NX only (if installed with linerless kit)

- Be careful not to touch the cutter blade when cleaning the printer.
- Open the print head if the printer is not used for printing for more than one day. Paper jam might occur the next time when you print if the print head is closed for a long period with linerless label loaded.
- When loading linerless label, make sure that the end of the media extends about 3 cm (1.18”) out the media discharge outlet.

Note

You can purchase a cleaning kit or cleaning sheet from a SATO reseller or technical service center.

5.2 Maintenance of the Print Head and Platen Roller

Maintenance should be performed at the following regular intervals:

- After you print one media roll or print media for one hundred and fifty meters.
  Use the cleaning kit to clean these parts:
  - Print head
  - Platen roller
  - Media sensors
  - Media guide

- After you print six media rolls or print media for nine hundred meters.
  Use the cleaning sheet to clean these parts:
  - Print head
  - Platen roller

  Use the cleaning kit to clean these parts:
  - Media guide
  - Feed roller
  - Media route
  - Ribbon route

Maintenance intervals for the optional linerless kit (CL4NX only):

- After you print ten media rolls or whenever there is any glue residue or paper dust on the media route.
  Use the cleaning kit to clean these parts:
  - Print head
  - Media guide
  - Media sensors
  - Guide rollers

  * There is no need of cleaning the linerless platen roller unless it is significantly soiled.

Note

The above maintenance intervals are only for reference. Perform the cleaning when necessary.

5.2.1 Maintenance using the Cleaning Kit

The maintenance procedure using the cleaning kit is as follows:

Note

For details on the cleaning kit, refer to the manual attached to the cleaning kit.

1 Make sure that the printer is in power off mode, then disconnect the power cord from the AC outlet.

2 Open the **top cover**.

⚠ **CAUTION**

Open the top cover fully to prevent accidental drop of the cover.

3 Push the **head lock lever** ① towards the rear to unlock the print head.

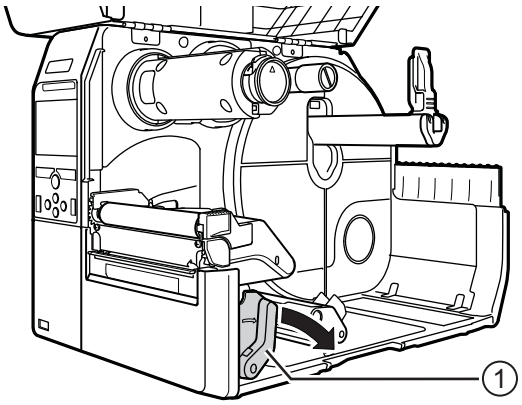

⚠ CAUTION

- The print head and its surroundings are hot after printing. Be careful not to touch it, to avoid being burned.
- Touching the edge of the print head with your bare hand could cause injury.

4 Remove the media and ribbon if they are already loaded.

Refer to **Section 3.3 Removing the Ribbon** and the reverse procedure in **Section 3.5 Loading Media**.

5 Clean the dirt on the **print head** ②, **platen roller** ③ and **ribbon roller** ④ using a cleaning pen or a cotton swab dabbed with cleaning liquid.

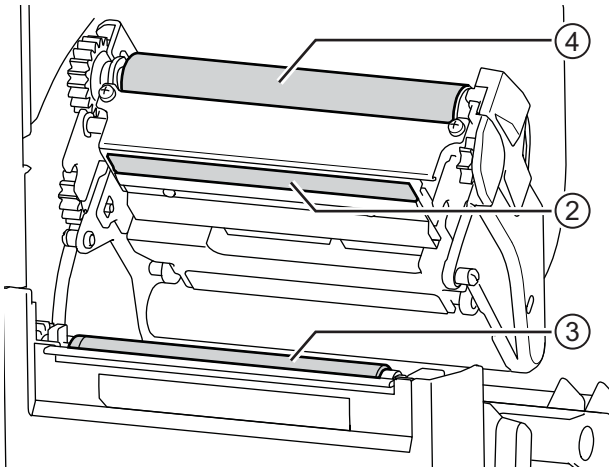

6 Tilt the **sensor guide lock** ⑤ down and pull out the **media sensor guide** ⑥.

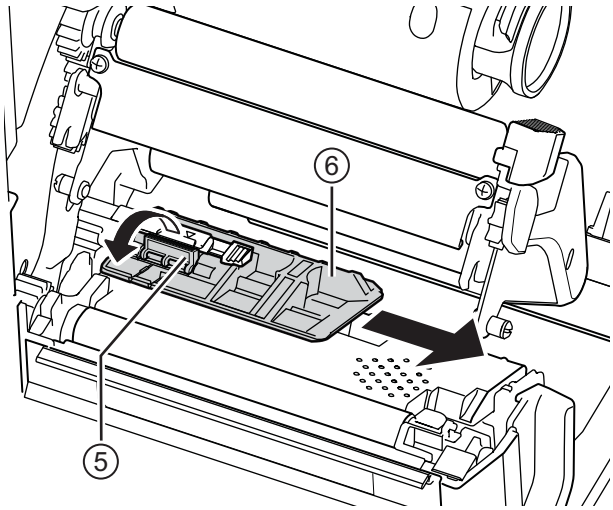

7 Clean the bottom of the **media sensor guide** using the cotton cloth dabbed with cleaning liquid.

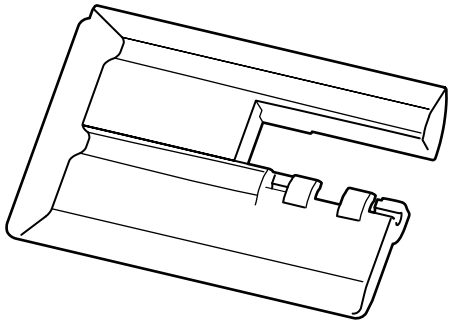

8 Clean the **media sensor** ⑦ using the cotton cloth dabbed with cleaning liquid.

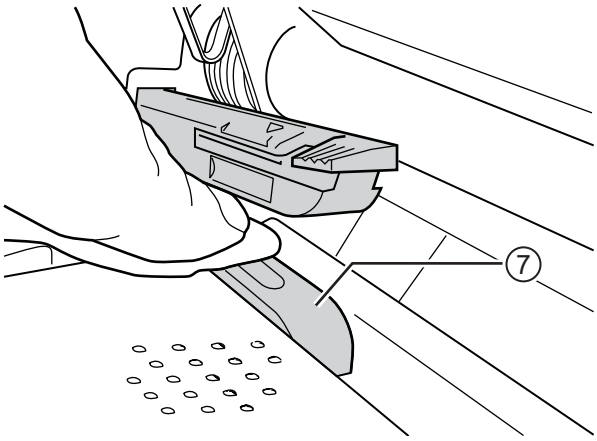

9 Return the **media sensor guide** to its original position and tilt the **sensor guide lock** up to the locked position.

5.2.2 Additional Procedure for the Optional Linerless Kit (CL4NX only)

1 After performing step 8 above, clean the **media guide** ⑧ and inner surface ⑨ that is in contact to the label edge. Use the cotton cloth dabbed with cleaning liquid to clean.

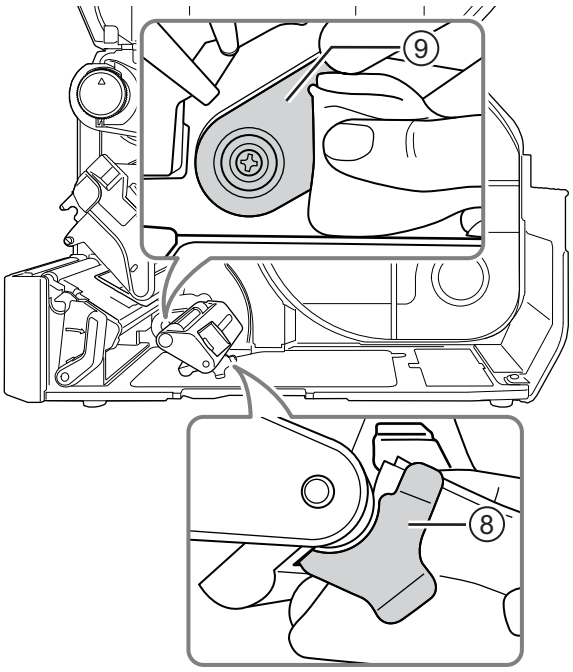

2 Clean the **guide rollers** ⑩ using the cotton cloth dabbed with cleaning liquid.

Rotate the guide rollers to clean the whole areas of them.

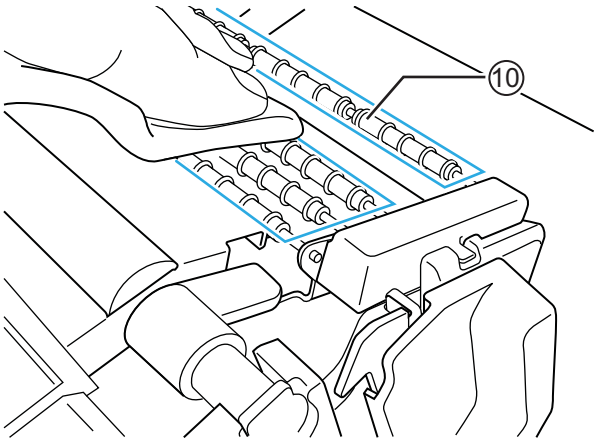

5.2.3 Maintenance using the Cleaning Sheet

The maintenance procedure using the cleaning sheet is as follows:

1 Make sure that the printer is in power off mode, then disconnect the power cord from the AC outlet.

2 Open the **top cover**.

⚠ CAUTION

Open the top cover fully to prevent accidental drop of the cover.

3 Push the **head lock lever** ① towards the rear to unlock the print head.

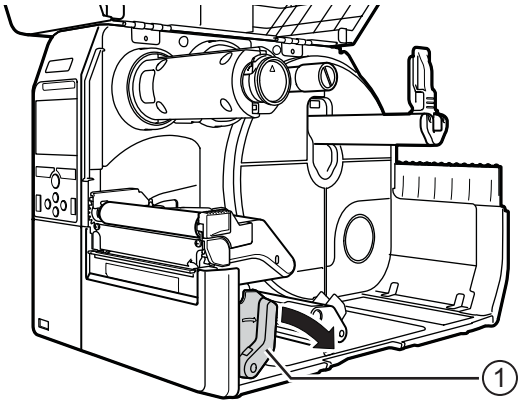

⚠ CAUTION

- The print head and its surroundings are hot after printing. Be careful not to touch it, to avoid being burned.
- Touching the edge of the print head with your bare hand could cause injury.

4 Remove the media and ribbon if they are already loaded.

Refer to **Section 3.3 Removing the Ribbon** and the reverse procedure in **Section 3.5 Loading Media**.

5 Place the **cleaning sheet** ② between the **print head** and the **platen roller**.

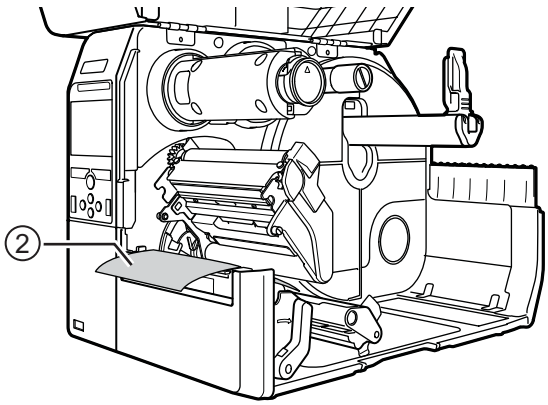

Note

Align the rough side of the cleaning sheet adjacent to the print head.

6 Press the **print head** down until you lock the **head lock lever** in place.

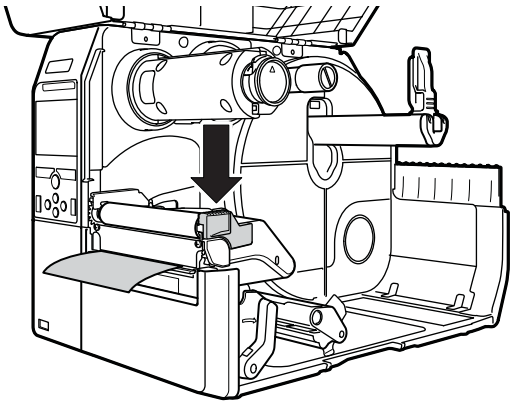

7 Using two hands, pull the **cleaning sheet** away from the printer.

8 After you pull out the cleaning sheet, repeat steps 4 through 6, two or three more times.

When no more dirt appears on the cleaning sheet after you have pulled it out, stop repeating these steps.

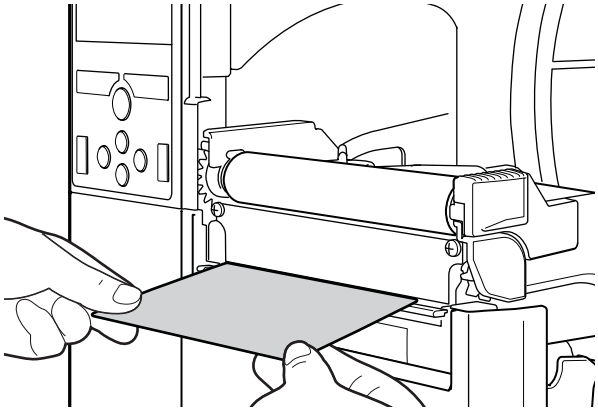

9 Push the **head lock lever** ① towards the rear to unlock the **print head**.

10 Use a **cleaning pen** ③ to clean the dirt on the **print head**.

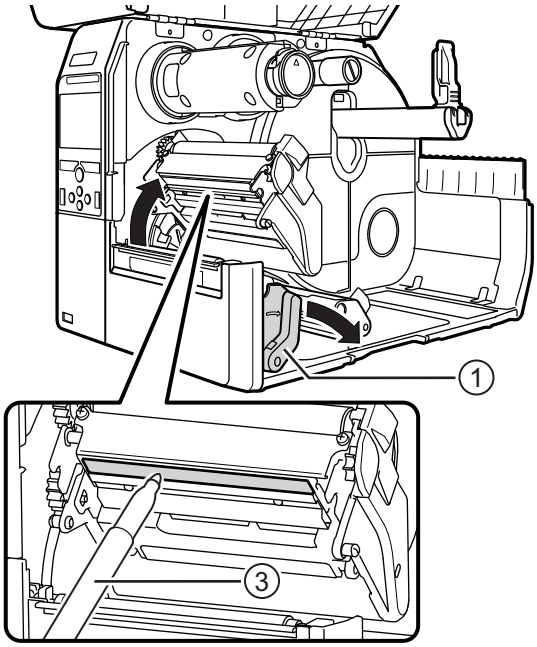

5.3 Adjusting the Base Reference Point

5.3.1 About the Base Reference Point

The base reference point is the point at which one determines the print position and stop/cut/dispensing position.
The base reference point differs depending on the operation mode or media sensor you use.

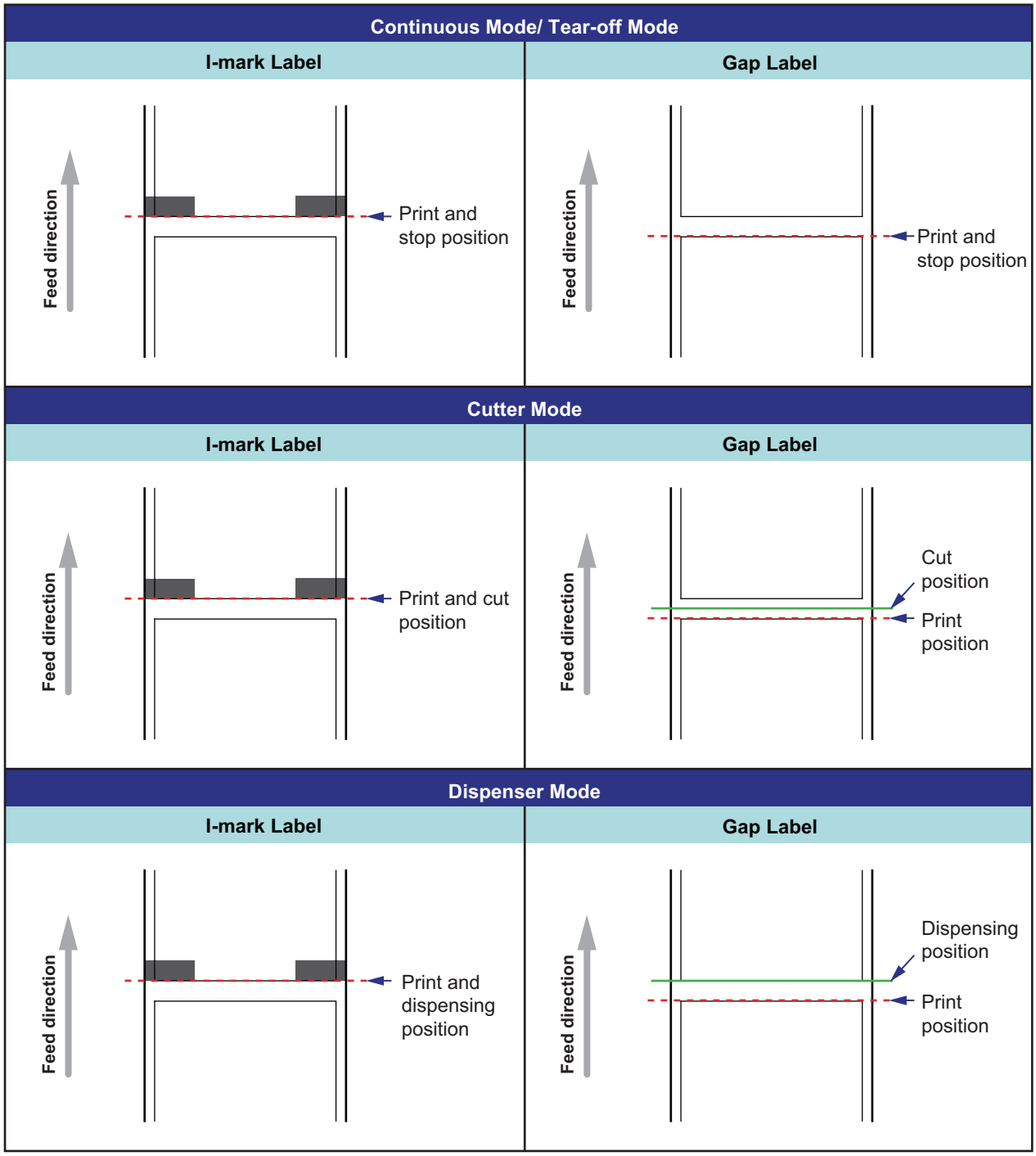

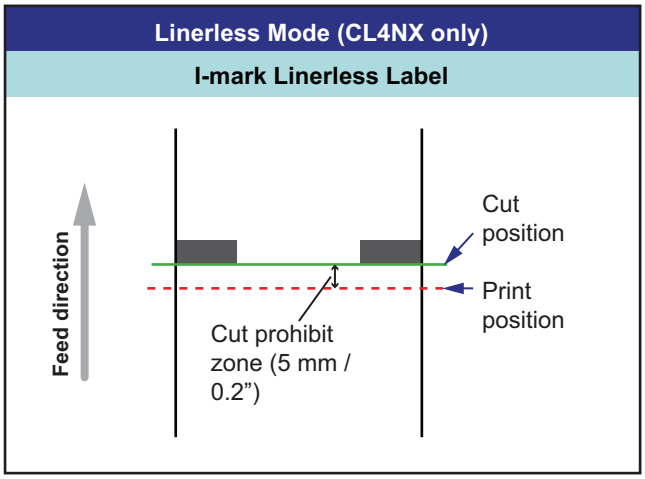

5.3.2 Adjusting the Print Position

Set the **Pitch** in the **Printing > Advanced > Adjustments** menu to adjust the print position.

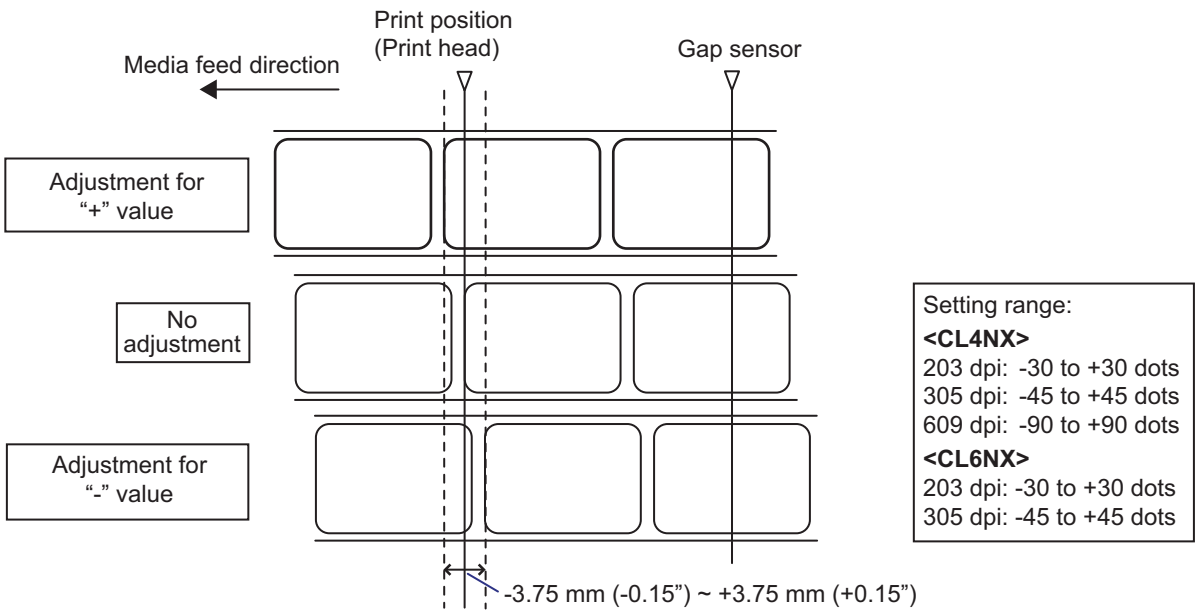

Note

The above base reference point (print position) will be the stop position when the sensor type is set to Gap sensor.

Adjust the print position using the following procedure:

1 When the printer is in online mode, press the ⏯ button on the operator panel to change to offline mode.

2 Press the ↵ button to show the **Settings** menu.

3 Select **Printing** using the ◀/▶ buttons, then press the ↵ button.

4 Select **Advanced** > **Adjustments** > **Pitch** using the ▲/▼ buttons, then press the ↵ button.

The Pitch screen shows.

5 Change the setting value. Press the ◀/▶/▲/▼ buttons to select the number and then press the ↵ button to enter the number to the text box.

The setting range is as follows:

<CL4NX>

203 dpi:	-30 to +30 dots
305 dpi:	-45 to +45 dots
609 dpi:	-90 to +90 dots

<CL6NX>

203 dpi:	-30 to +30 dots
305 dpi:	-45 to +45 dots

6 Press the right soft button to save the setting value.

5.3.3 Adjusting the Media Stop Position

Set the **Offset** in the **Printing > Advanced > Adjustments** menu to adjust the media stop position.

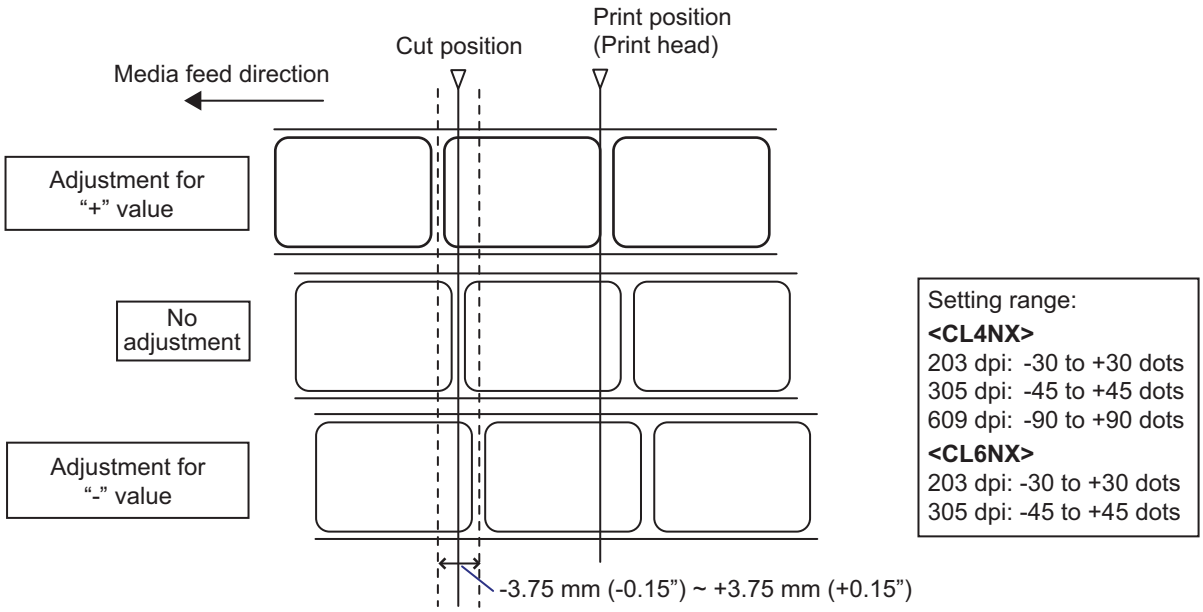

Note

- The above cut reference position for printing indicates the label stop position when the media sensor is set to Gap sensor.
- You can also adjust when the operation mode is specified to Tear-off or Dispenser.

Adjust the stop position using the following procedure:

1 When the printer is in online mode, press the ⏯ button on the operator panel to change to offline mode.

2 Press the ↵ button to show the **Settings** menu.

3 Select **Printing** using the ◀/▶ buttons, then press the ↵ button.

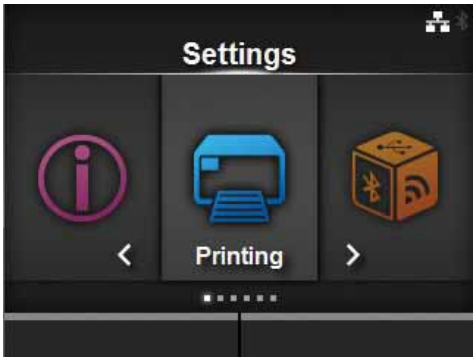

4 Select **Advanced** > **Adjustments** > **Offset** using the ▲/▼ buttons and the ↵ button.

The Offset screen shows.

5 Change the setting value. Press the ◀/▶/▲/▼ buttons to select the number and then press the ↵ button to enter the number to the text box.

The setting range is as follows:

<CL4NX>

203 dpi:	-30 to +30 dots
305 dpi:	-45 to +45 dots
609 dpi:	-90 to +90 dots

<CL6NX>

203 dpi:	-30 to +30 dots
305 dpi:	-45 to +45 dots

6 Press the right soft button to save the setting value.

5.3.4 Notes on the Stop/Cut Position of Different Media

Stop position of the label in dispenser mode.

The regular position is to let the label stay about 2 ± 1 mm (0.08” ± 0.04”) on the liner.

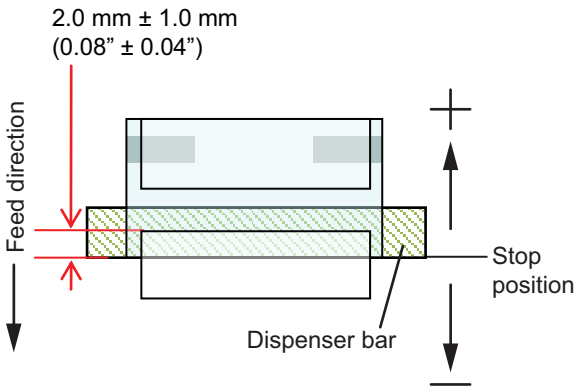

Cut position when using the label.

The regular cut position is between labels (only cut on the liner).
Do not cut on the label as the remaining adhesive on the blade will decrease the performance of the cutter.

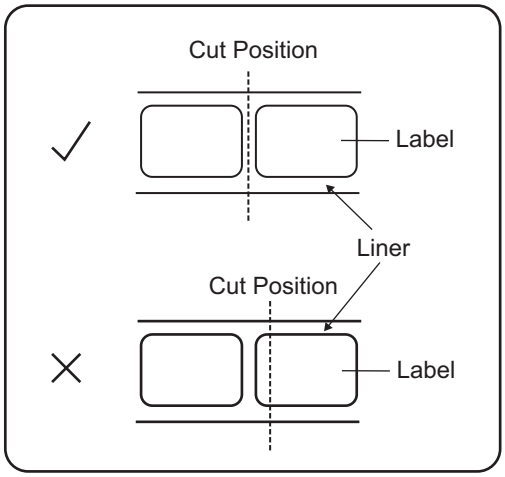

Cut position when using the media with perforated line.

Do not cut on the perforated line or area from the perforated line towards you. Doing so may cause a paper jam or damage.

- Media roll
  Do not cut on the perforated line or within 1 mm (0.04”) from the perforated line towards you.

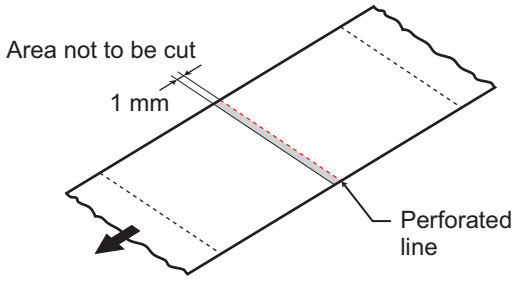

- Fan-fold media
  Do not cut on the perforated line or within 4 mm to 25 mm (0.16” to 0.98”) from the perforated line towards you.

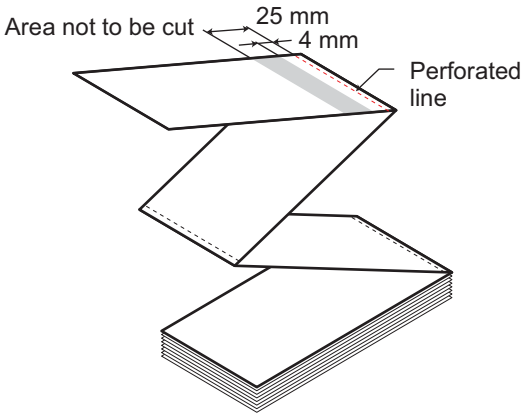

5.4 Adjusting the Print Quality

You can adjust the print quality by adjusting the print darkness and print speed.

5.4.1 Adjustment of the Print Darkness

The adjustment procedure for the print darkness is as follows:

Note

You can fine tune the print darkness by setting the **Darkness Adjust** in the **Printing** > **Advanced** > **Adjustments** menu.

1 When the printer is in online mode, press the ⏯ button to change the printer to offline mode.

2 Press the ↵ button to show the **Settings** menu.

3 Press the ◀/▶ buttons to select **Printing** and then press the ↵ button.

4 Press the ▲/▼ buttons to select **Darkness** and then press the ↵ button.

The Darkness screen shows.

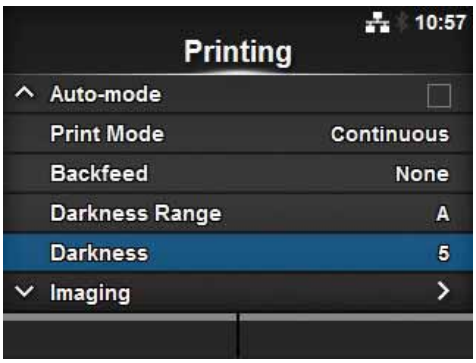

5 Press the ▲/▼ buttons to select a value.

The setting range is from 1 to 10. 1 is the lightest and 10 is the darkest.

6 Press the right soft button or ↵ button to save the value.

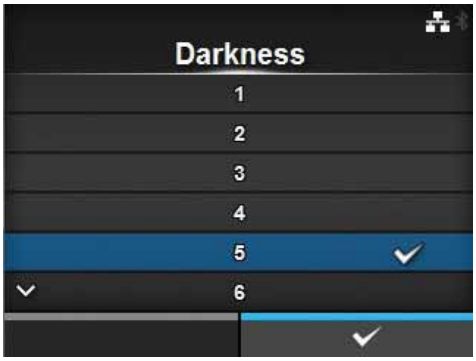

5.4.2 Adjusting the Print Speed

The adjustment of the print speed not only changes the speed of printing but also affects the print quality. The setting range of the print speed varies depending on the following print resolution:

<CL4NX>
- Resolution 203 dpi (8 dots/mm): 2 to 10 (inches/sec)
- Resolution 305 dpi (12 dots/mm): 2 to 8 (inches/sec)
- Resolution 609 dpi (24 dots/mm): 2 to 6 (inches/sec)

<CL6NX>
- Resolution 203 dpi (8 dots/mm): 2 to 10 (inches/sec)
- Resolution 305 dpi (12 dots/mm): 2 to 8 (inches/sec)

Note (CL4NX only)

If the optional linerless kit is installed, the setting range will be from 2 to 6 ips (inches/sec) regardless of the print resolution of the printer.

The adjustment procedure for the print speed is as follows:

1 When the printer is in online mode, press the ⏯ button to change the printer to offline mode.

2 Press the ↵ button to show the **Settings** menu.

3 Press the ◀/▶ buttons to select **Printing** and then press the ↵ button.

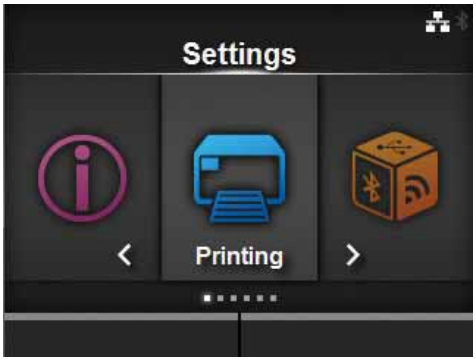

4 Press the ▲/▼ buttons to select **Speed** and then press the ↵ button.

The Speed screen shows.

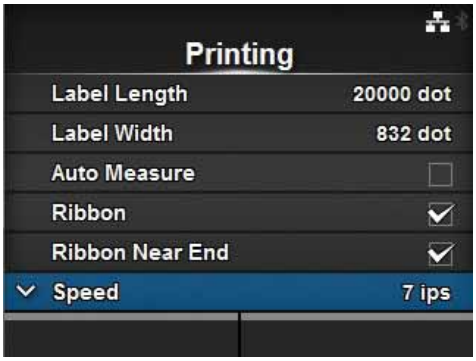

5 Press the ▲/▼ buttons to select a value.

6 Press the right soft button or ↵ button to save the value.

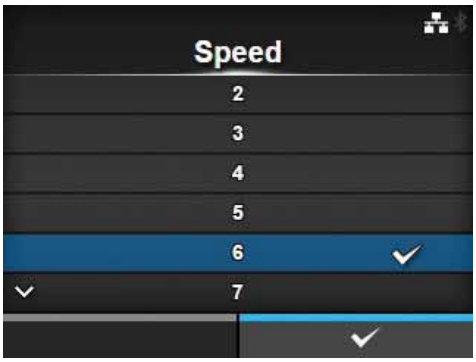

5.5 Adjusting the Buzzer Volume

The adjustment procedure for the buzzer volume when an error occurs is as follows:

1 When the printer is in online mode, press the ⏯ button on the operator panel to change to offline mode.

2 Press the ↵ button to show the **Settings** menu.

3 Press the ◀/▶ buttons to select **System** and then press the ↵ button.

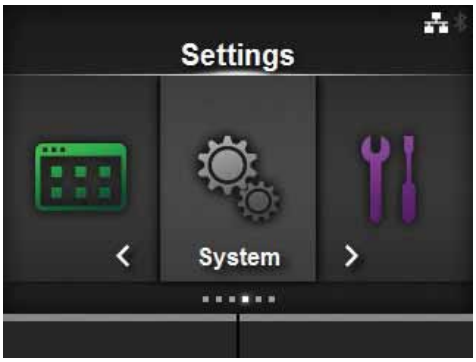

4 Select **Sound** > **Error Sound** using the ▲/▼ buttons and then press the ↵ button.

The Error Sound screen shows.

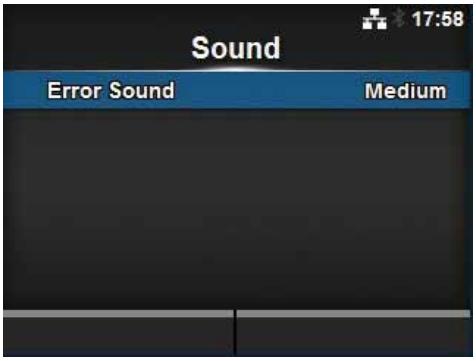

5 Press the ▲/▼ buttons to set the volume.

The options are as follows:

- **Off**: Mute the sound.
- **Low**: Low volume.
- **Medium**: Medium volume.
- **High**: High volume.

6 Press the right soft button or ↵ button to save the setting.

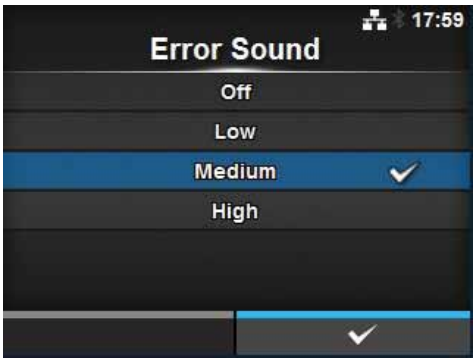

5.6 Adjusting the Head Pressure Balance

Print head balance refers to the equalization of pressure between the print head and the platen roller. If the print head balance is out of adjustment, the printed image will be darker on one side of the media than the other and the media will be prone to travel in the direction of greater pressure.

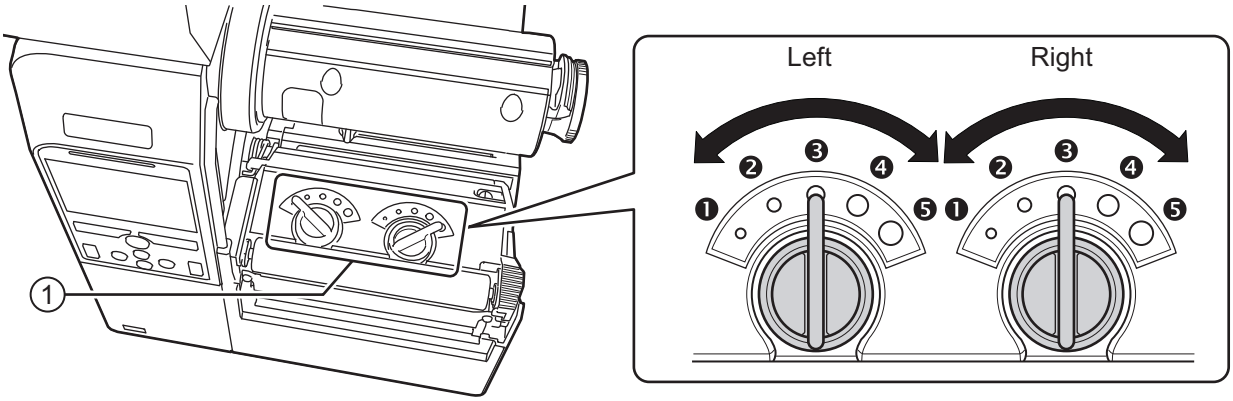

Setting the Criteria of the Head Pressure Balance

- Set the head pressure according to the media thickness, including the liner.
- Set the pressure balance according to the media width.

5.6.1 Head Pressure Setting

The adjustment procedure for the head pressure balance is as follows:

1 Open the **top cover** of the printer.

2 Find the **adjustment dials** ① on the top of the **print head assembly** as shown.

3 Turn the **adjustment dials** ① to match the media thickness.

Media Thickness (mm)	0.060 - 0.200	0.200 - 0.268
Pressure Balance Gradation	❸ (Left and Right, CL4NX only) ❸ to ❹ (Left and Right, CL6NX only)	❹to ❺ (Left and Right)
Reference	Thin paper/normal label, etc.	Thick paper/tag, etc.

4 Be sure to perform the pressure balance setting as explained below, after step 3.

Note

- The factory default setting is Left ❸ and Right ❸.
  For CL6NX dispenser model, the factory default setting is Left ❹ and Right ❹.
- The thickness of the media includes the liner.

5.6.2 Pressure Balance Setting

The adjustment procedure for the pressure balance is as follows:

1 Open the **top cover** of the printer.

2 Find the **adjustment dials** ① on the top of the **print head assembly** as shown.

3 Turn the **adjustment dials** ① according to the media width and set the pressure balance.

For CL4NX:

Media Width (mm)	25 - 54	54 - 83	83 - 131
Pressure balance gradation	Left ❸ Right ❶	Left ❸ Right ❷	Left ❸ Right ❸

*First use the gradation setting for the head pressure and then adjust according to the media width. Above table shows an example when the head pressure is Left ❸.

For CL6NX:

Media Width (mm)	50 - 120	120 - 140	140 - 160	160 - 180
Pressure balance gradation	Left ❺ Right ❶	Left ❸ or ❹ Right ❶	Left ❸ or ❹ Right ❷	Left ❸ or ❹ Right ❸ or ❹

*First use the gradation setting for the head pressure and then adjust according to the media width.

Note

- The factory default setting is Left ❸ and Right ❸.
  For CL6NX dispenser model, the factory default setting is Left ❹ and Right ❹.

This page is intentionally left blank.

6 Troubleshooting

This chapter explains the errors that can occur on the printer and the displays for indicating the current status.

6.1 When an Error Message Occurs

When there is an error on the printer, the error message will show on the screen.
The error message, its cause and the countermeasures are as follows:

Error			
No.	**Message**	**Cause**	**Countermeasure**
1001	Machine error To clear the error: Power off the printer.	Defective circuit board.	Replace the main board.
1002	Program error To clear the error: Power off the printer.	Flash ROM is not accessible.	Power on the printer again.
		Number of write has been exceeded.	Power on the printer again.
		Other program error.	Replace the main board.
1003	Parity error To clear the error: Press the Offline or ▶II button, or adjust the settings.	RS-232C settings are incorrect.	Adjust the interface settings correctly.
		The cable connection is incorrect.	Check and connect the cable correctly.
1004	Overrun error To clear the error: Press the Offline or ▶II button, or adjust the settings.	RS-232C settings are incorrect.	Adjust the interface settings correctly.
		The cable connection is incorrect.	Check and connect the cable correctly.
1005	Framing error To clear the error: Press the Offline or ▶II button, or adjust the settings.	RS-232C settings are incorrect.	Adjust the interface settings correctly.
		The cable connection is incorrect.	Check and connect the cable correctly.

Error			
No.	**Message**	**Cause**	**Countermeasure**
1006	Buffer overflow  To clear the error: Press the Offline or ⏯ button.	The size of the received data exceeds the size of the receive buffer.	Do not send data that exceeds the size of the receive buffer.
		The communication settings between the printer and the host are incorrect.	Set the communication between the printer and the host correctly.
1007	Head open 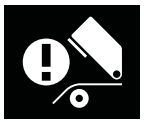 To clear the error: Close the print head.	The print head is unlocked.	Lock the print head.
		The sensor for sensing the open/close status of the print head is defective.	Replace the sensor for sensing the open/close status of the print head.
1008	Out of paper  To clear the error: Load the media and open/close the print head or press the Offline or ⏯ button.	The media is not loaded.	Load the media correctly.
		The media is not loaded correctly.	
		The sensitivity of the media sensor is not set correctly.	Adjust the sensor level.
		The media has jammed.	Remove the jammed media.
		The media sensor is dirty.	Clean the media sensor.
		The cable of the media sensor is disconnected.	Connect the cable of the media sensor correctly.
1009	End of ribbon  To clear the error: Load the ribbon correctly and close the print head or press the Offline or ⏯ button.	The ribbon is not loaded.	Load a new ribbon.
		The ribbon is damaged.	
		The ribbon is not loaded correctly.	Load the ribbon correctly.
1010	Media error 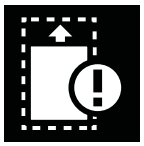 To clear the error: Press the Offline or ⏯ button or open/close the print head.	The configured media size and loaded media size are different.	Check the configured media size and loaded media size.
		The received print data is larger than the configured media size.	Check the print data.
		The media is fed a longer distance due to the incorrect sensor level.	Adjust the sensor level.

Error			
No.	**Message**	**Cause**	**Countermeasure**
1012	Print head error  To clear the error: Power off or change the head check conditions.	The print elements are worn out.	Change print head check conditions to only check for missing elements in barcodes and try to adjust missing elements to white bars.
		The print head is damaged.	Replace the print head.
1013	USB write error 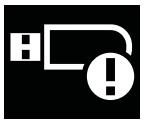 To clear the error: Insert USB memory, remove USB memory or press the Offline or ⏯ button.	The USB memory is disconnected while writing.	Connect the USB memory.
		The copy area in the USB memory is not sufficient.	Make sure that the USB memory has sufficient copy area.
		Writing to the USB memory fails.	Replace the USB memory.
		The USB memory is not formatted.	Format the USB memory.
1014	USB memory full 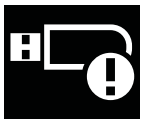 To clear the error: Use USB memory with sufficient space or press the Offline or ⏯ button.	The space in the USB memory is not sufficient.	Delete unwanted data from the USB memory.
1015	Cutter error  To clear the error: Press the **FEED** button.	A media jam has occurred in the cutter unit.	Remove the jammed media from the cutter unit.
		The cutter blade does not return to the specified position.	Press the **FEED** button to move the cutter blade back to the specified position.
1016	Cutter open  To clear the error: Close the bracket of the cutter.	The cutter-open lever is open.	Close and lock the cutter-open lever.
		The cable of the cutter unit is disconnected.	Connect the cable of the cutter unit correctly.
		The cutter open sensor is defective.	Replace the cutter open sensor.
1017	Command error 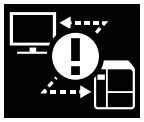 To clear the error: Press the Cancel or ⏯ button.	Incorrect command or parameter in the print data. Caaa: position of error occurrence <bb>: error command name cc: error code	Check the print data.

Error			
No.	**Message**	**Cause**	**Countermeasure**
1018	RFID tag error (CL4NX only)  To clear the error: Press the Cancel button.	Could not read/write to the RFID inlay.	Discard this tag.
1019	RFID system error (CL4NX only) 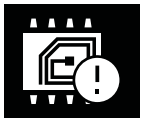 To clear the error: Power off the printer.	RFID module is not operating correctly.	Contact the technical support center for repair of the RFID module.
1020	Calendar error  To clear the error: Change the calendar setting, press the Offline or ▶II button, or power off the printer.	The date and time of the calendar are incorrect.	Check if you have installed the RTC kit or replace the RTC PCB.
1021	BCC check error 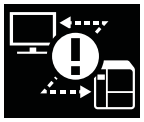 To clear the error: Press the ▶II button or cancel the print job.	The BCC code of the data to be sent (one item) is incorrect.	Check the data to be sent and communication settings. ▶II button: Continue printing from the print data where the BCC error occurred. Send the SUB command: Clear the BCC error and continue printing from where it stopped.
1022	Overheat error  To clear the error: Stop the operation of the printer and wait until the temperature decreases.	The temperature of the printer has exceeded its tolerance value.	Stop the operation of the printer to let the temperature decrease.

Error			
No.	**Message**	**Cause**	**Countermeasure**
1023	NTP error  To clear the error: Press the Offline button or change the calendar setting.	Could not connect to the time server and set the calendar clock.	Confirm that the address of the time server is correct. Confirm that there is a connection to the time server. If RTC kit is installed, the calendar can be set manually and operation resumed without NTP functionality. To check or set the clock, go to the System settings menu and set the Date and Time.
1024	Head density changed  To clear the error: Confirm the prompted message.	The print head is not installed.	Install the print head.
		A new print head with a different resolution has been installed.	Install a print head with the same density as the old print head.
1028	Gap not found  To clear the error: Press the Offline button or open/ close the print head.	Meandering media.	Clean and adjust the media path.
		The sensor type is incorrect.	Use the correct sensor type.
		The media sensor level is incorrect.	Adjust the media sensor level.
1035	I-mark not found  To clear the error: Press the Offline button or open/ close the print head.	Meandering media.	Clean and adjust the media path.
		The sensor type is incorrect.	Use the correct sensor type.
		The media sensor level is incorrect.	Adjust the media sensor level.
1046	EAP authentication error (EAP failure)  To clear the error: Change the Wi-Fi settings or press the Offline button.	EAP Authentication failure.	Use the correct Wi-Fi settings.

Error			
No.	**Message**	**Cause**	**Countermeasure**
1047	EAP authentication error (EAP timeout)  To clear the error: Press the Offline button.	EAP Authentication failure.	Use the correct Access Point (AP) and authentication server settings.
1050	Bluetooth error 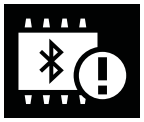 To clear the error: Confirm the prompted message.	Bluetooth module is defective.	Contact the technical support center for repair of the Bluetooth module.
1058	CRC check error 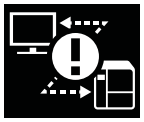 To clear the error: Press the left or right soft button.	CRC has not been added to the data. CRC does not match.	Check transmitted data and interface settings. Right soft button: Continue printing from the print data where the CRC error occurred. Left soft button: Cancel the print data with the CRC error and continue printing from the next item.
1059	Non-RFID warning (CL4NX only)  To clear the error: Press the Cancel button.	With Non-RFID warning enabled and RFID tag loaded, a print job without RFID command is sent.	Add RFID command to the print job. Disable Non-RFID warning. Replace with non-RFID label.
1066	Paper jam error  To clear the error: Open the print head and load the media again.	The media has jammed.	Remove the jammed media. Load the media again.

6.1.1 More Information about Command Error

Printer motion when detecting a command error

When **Show Error** is set to ENABLE in Applications > SBPL, the command error information is shown on the error message (second line), and the print operation is paused.
This error can be cleared by pressing the left soft button **CANCEL X**, but the data in which an error is detected is discarded and cannot be printed.

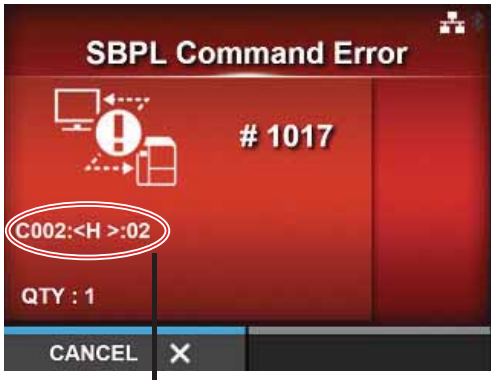

Command error information

Location of error occurrence

"Caaa" in the command error message shows the location of command error.
The number of ESC commands from ESC+A is shown in "aaa".
Note that the ESC+A command is not included in the number of ESC commands, which can be shown up to 999. If the number of ESC commands exceeds 999, it is shown as "999".

Example)
When a command error is detected by the Horizontal Print Position <H> command.

-------: [ESC]A
C001: [ESC]V100
C002: [ESC]H99999 => Location of the command error
C003: [ESC]L0202
C004: [ESC]M,ABCDEF
C005: [ESC]Q1
C006: [ESC]Z

In this case, C002 is the location of the error.

Error command name

The command name, in which an error is detected, is shown in "<bb>".
* A one-byte command name is left aligned.

Error code

The cause of command error will be indicated in the code in "cc" where an error is being shown.

Code <cc>	Cause
01	Analyzed improper command.
02	Received improper parameter.
03	Analyzed improper graphic and external character data.
04	Specified memory area (card slot) is inappropriate. Tried to write to a write-protected media.
05	Number specified by registration command has already been taken.
06	Exceeded the registration area. (Memory full).
07	Data is not registered.
08	The specified print start position is outside the printable area.
09	The printing image is outside the printable area. (Barcode only).

6.2 When the LED Lights Red/Blue

The LED will light or flash to show the current status of the printer.
The status when the LED lights or flashes is as follows:

LED	Printer Status	Countermeasure
Light off.	The power is off or the printer is in offline mode.	Power on the printer or change it to online mode.
Lights blue.	The printer is in online mode.	You can operate the printer.
Flashes blue. (At intervals of 2 seconds)	The printer is in sleep mode.	You can operate the printer.
Lights red.	An error has occurred.	Clear the error according to the message.

Note

If the printer enters sleep mode during a printer error status (LED lights red), the LED indicator will flash blue at intervals of two seconds.

6.3 Troubleshooting Table

Check the items below when the printer does not operate correctly.

⚠ WARNING

- Do not touch the power button, connect or disconnect the power cord while your hands are wet. Doing so could cause an electric shock.
- Disconnect the power cord from the AC outlet before you perform the cleaning.

Note

You can purchase a cleaning kit or cleaning sheet from a SATO reseller or technical service center.

6.3.1 No Power/Nothing on the Screen

No.	What to check	Countermeasure
1	Is the power cord fully connected to the AC outlet?	Connect the power cord to the AC outlet fully.
2	Is the power cord fully connected to the printer?	Connect the power cord to the AC input terminal of the printer fully.
3	Is the printer fuse blown?	Replace the printer fuse.
4	Is the power cord damaged?	Replace the power cord. Contact a SATO reseller or technical service center for the specific power cord for this printer. Do not use power cords that are not designed specifically for this printer.
5	Is there electricity at the AC outlet that supplies the power to the printer?	Check if there is electricity at the AC outlet. Connect to another AC outlet.
6	Is the main board defective?	Replace the main board.

6.3.2 Cannot Feed the Media

No.	What to check	Countermeasure
1	Are the media and ribbon designed for the printer?	Use media and ribbon designed for the printer.
2	Are the media and ribbon loaded correctly?	Load the media and ribbon correctly.
3	Is the media or ribbon deformed?	Use the media or ribbon that is not deformed. You cannot feed the media or ribbon that is deformed.
4	Is the media guide set correctly?	Adjust the media guide.
5	Is the correct sensor type set?	Set the correct sensor type.
6	Is the sensitivity of the sensor set correctly?	Adjust the sensor level.

No.	What to check	Countermeasure
7	Is the platen roller dirty?	If the platen roller is dirty, clean it with the cleaning kit. For printer cleaning, refer to **Section 5.2 Maintenance of the Print Head and Platen Roller**.
8	Is the platen roller damaged?	Replace the platen roller.
9	Does the interface operate correctly?	Check the interface according to the Interface Troubleshooting.
10	Is the data or signal sent from the computer incorrect?	Power on the device again. Check the data sent from the computer and communication conditions.
11	Is the main board defective?	Replace the main board.

6.3.3 Can Feed the Media but Cannot Print

No.	What to check	Countermeasure
1	Are the media and ribbon designed for use with the printer?	Use the media and ribbon designed for the printer.
2	Is the ribbon wound correctly.	If the knob of the ribbon rewinder is not set to its initial position, remove the wound ribbon then set the knob again.
3	Is the correct sensor type set?	Set a correct sensor type.
4	Is the print head installed correctly?	Install the print head correctly.
5	Is the pressure of the print head too strong or too weak?	Adjust the pressure of the print head with the head pressure adjustment dial.
6	Is the print head dirty or is there a label attached to it?	If the print head is dirty, clean it using the cleaning pen. If a label is attached to the print head, remove it. If the glue of label is attached to the print head, clean it using a cleaning kit. Do not clean using a hard object. Doing so could cause damage to the print head. For printer cleaning, refer to **Section 5.2 Maintenance of the Print Head and Platen Roller**.
7	Is the media sensor dirty?	If the media sensor is dirty, clean it using the cleaning kit. For printer cleaning, refer to **Section 5.2 Maintenance of the Print Head and Platen Roller**.
8	Does the interface operate correctly?	Check the interface according to the Interface Troubleshooting.
9	Is the data or signal sent from the computer incorrect?	Power on the device again. Check the data sent from the computer and communication conditions.

No.	What to check	Countermeasure
10	Is the print head defective?	Replace the print head and reset the counter.
11	Is the main board defective?	Replace the main board.

6.3.4 Bad Print Quality

No.	What to check	Countermeasure
1	Are the media and ribbon designed for use with the printer?	Use media and ribbon designed for the printer.
2	Are the media and ribbon loaded correctly?	Check if the media and ribbon are loaded correctly.
3	Is the tension of the ribbon correct?	Adjust the tension of the ribbon.
4	Is the print head installed correctly?	Install the print head correctly.
5	Is the pressure of the print head too strong or too weak?	Adjust the pressure of the print head with the head pressure adjustment dial.
6	Is the print speed too fast?	Adjust the print speed.
7	Is the print darkness too low or too high?	Adjust the print darkness.
8	Is the platen roller dirty?	If the platen roller is dirty, clean it using the cleaning kit. For printer cleaning, refer to Maintenance.
9	Is the print head dirty or is there a label attached to it?	If the print head is dirty, clean it using the cleaning pen. If a label is attached to the print head, remove it. If the glue of label is attached to the print head, clean it using a cleaning kit. Do not clean using a hard object. Doing so could cause damage to the print head. For printer cleaning, refer to **Section 5.2 Maintenance of the Print Head and Platen Roller**.
10	Is the print head defective?	Replace the print head and reset the counter.
11	Is the platen roller damaged?	Replace the platen roller.
12	Is the main board defective?	Replace the main board.

6.3.5 Incorrect Print Position

No.	What to check	Countermeasure
1	Are the media and ribbon designed for use with the printer?	Use media and ribbon designed for the printer.
2	Are the media and ribbon loaded correctly?	Check if the media and ribbon are loaded correctly.
3	Is the media or ribbon deformed?	Use the media or ribbon that is not deformed. You cannot feed the media or ribbon that is deformed.
4	Is the print head installed correctly?	Adjust the print head.
5	Is the media guide set correctly?	Adjust the media guide.
6	Is the correct sensor type set?	Set the correct sensor type.
7	Is the sensitivity of the sensor set correctly?	Adjust the sensor level.
8	Is the offset set correctly?	Adjust the offset.
9	Is the pitch offset or base reference point offset set correctly?	Adjust the pitch offset or base reference point offset.
10	Is the platen roller dirty?	If the platen roller is dirty, clean it using the cleaning kit. For printer cleaning, refer to **Section 5.2 Maintenance of the Print Head and Platen Roller**.
11	Is the media sensor dirty?	If the media sensor is dirty, clean it using the cleaning kit. For printer cleaning, refer to **Section 5.2 Maintenance of the Print Head and Platen Roller**.
12	Is the data or signal sent from the computer incorrect?	Power on the device again. Check the data sent from the computer and communication conditions.
13	Is the platen roller damaged?	Replace the platen roller.

6.4 Interface Troubleshooting

When an interface error occurs on the printer, check with the checklist related to that interface.

6.4.1 USB Interface

No.	Item to check
1	Check that the USB cable is connected correctly.
2	Check that the cable is not damaged.
3	Check the configuration of the printer. Check the setting of the USB interface through the **Settings** > **Interface** > **USB** menu.
4	If there are multiple USB ports on the computer, connect to another port.
5	Disconnect other USB devices from the computer.
6	Power on the printer and computer again.
7	Install the USB driver again.

6.4.2 LAN Ethernet Interface

No.	Item to check
1	Check that the LAN cable is connected correctly.
2	Check that the cable is not damaged.
3	Check the configuration of the printer. Check the setting of the LAN Ethernet interface through the **Settings** > **Interface** > **Network** menu.
4	Check that the allocated IP address is accessible by PING.
5	Check that the power of the HUB is on.
6	Check that the HUB is not defective.
7	Power on the printer again.

6.4.3 Bluetooth Interface

No.	Item to check
1	Check that the Bluetooth function is on.
2	Check that the devices using the same frequency band, such as wireless LAN enabled devices or microwaves are not in use.
3	Check that there is no obstacle such as a metal rack between the printer and the host.
4	Check the configuration of the printer. Check the setting of the Bluetooth interface through the **Settings** > **Interface** > **Bluetooth** menu.
5	Power on the printer and computer again.
6	Install the Bluetooth driver again.

6.4.4 RS-232C Interface

No.	Item to check
1	Check that the RS-232C cable is connected correctly.
2	Check that the cable is not damaged.
3	Check the configuration of the printer. Check the setting of the RS-232C interface through the **Settings** > **Interface** > **RS-232C** menu.
4	If there are multiple RS-232C ports on the computer, connect to another port.
5	Power on the printer and computer again.
6	Check that no other software is using the same RS-232C port.

6.4.5 IEEE1284 Interface

No.	Item to check
1	Check that the printer cable is connected to the LPT port of the computer correctly.
2	Check that the cable is not damaged.
3	If you are using a Windows printer driver, check that the correct port is selected.
4	Check the configuration of the printer. Check the setting of the IEEE1284 interface through the **Settings** > **Interface** > **IEEE1284** menu.
5	Connect to another port.
6	Power on the printer again.

6.4.6 External Signal Interface (EXT)

No.	Item to check
1	Check that the printer and external device are connected with a cable correctly.
2	Check that the cable is not damaged.
3	Check that the power of the external device is on.
4	Check the configuration of the printer. Check the setting of the external signal (EXT) interface through the **Settings** > **Interface** > **External I/O** menu.
5	Power on the printer and external device again.

6.4.7 Wireless LAN Interface

No.	Item to check
1	Check that the wireless LAN function is on.
2	Check that the devices using the same frequency band, such as wireless LAN enabled devices or microwaves are not in use.
3	Check that there is no obstacle such as a metal rack between the printer and the host.
4	Check the configuration of the printer. Check the setting of the wireless LAN interface through the **Settings** > **Interface** > **Network** > **Settings** > **Wi-Fi** menu.
5	Power on the printer again.

This page is intentionally left blank.

7 Appendix

7.1 List of Initial Values

The initial value refers to the setting value of the printer when it was shipped from the factory.
If you reset the printer, the setting values of the printer will change back to the factory default values. The tables below show the initial value of each setting item and type of reset that changes the value back to the initial value.

⚠ CAUTION

It is generally not necessary to perform the initialization. Doing so will remove all the customer settings.

7.1.1 Printing Menu

Setting Item	Initial Value		User Reset	Factory Reset
	CL4NX	CL6NX		
Label Length	203 dpi: 20000 dots 305 dpi: 18000 dots 609 dpi: 9600 dots	203 dpi: 20000 dots 305 dpi: 18000 dots	Yes	Yes
Label Width	203 dpi: 832 dots 305 dpi: 1248 dots 609 dpi: 2496 dots	if Head Base Position is Standard 203 dpi: 1-1216 dots 305 dpi: 1-1984 dots if Head Base Position is left-justify 203 dpi: 1340 dots 305 dpi: 2010 dots	Yes	Yes
Auto Measure	Disable		Yes	Yes
Ribbon	Use Ribbon		Yes	Yes
Ribbon Near End	Enable		Yes	Yes
Speed	203 dpi: 6 ips 305 dpi: 6 ips 609 dpi: 4 ips Linerless mode: 4 ips	203 dpi: 6 ips 305 dpi: 6 ips	Yes	Yes
Sensor Type	Gap None (When Print Mode is Linerless)	Gap	Yes	Yes
Auto-mode	Enabled		Yes	Yes

Setting Item	Initial Value		User Reset	Factory Reset
	CL4NX	CL6NX		
Print Mode	Tear-Off (No option is installed) Cutter (If cutter is installed) Dispenser (If dispenser is installed) Linerless (If linerless kit is installed)	Tear-Off (No option is installed) Cutter (If cutter is installed) Dispenser (If dispenser is installed)	Yes	Yes
Backfeed	Before (If Print Mode is set to Tear-Off or Linerless) After (If Print Mode is set to Dispenser or Cutter) None (If Print Mode is set to Continuous)	Before (If Print Mode is set to Tear-Off) After (If Print Mode is set to Dispenser or Cutter) None (If Print Mode is set to Continuous)	Yes	Yes
Eject Cut	0		Yes	Yes
Darkness Range	A		Yes	Yes
Darkness	5		Yes	Yes
Imaging	—		—	—
Vertical	0 dot		Yes	Yes
Horizontal	0 dot		Yes	Yes
Advanced	—		—	—
Calibration	—		—	—
Auto-calibration*1	Gap + I-Mark		—	—
GAP Levels	Value adjusted by the factory.		No	No
GAP Slice Levels	Auto		No	No
I-Mark Levels	Value adjusted by the factory.		No	No
I-Mark Slice Level	Auto		No	No
Head Check	Off		Yes	Yes
Head Check Mode	Always		Yes	Yes
Every Page	1		Yes	Yes
Check Media Size	Disabled		Yes	Yes
Adjustments	—		—	—
Offset	0 dot		No	No
Pitch	0 dot		No	No
Darkness Adjust	50		No	No
Start Online	Enabled		Yes	Yes

*1 Auto-calibration is not available for linerless models.

Setting Item	Initial Value		User Reset	Factory Reset
	CL4NX	CL6NX		
Feed After Error	Disabled		Yes	Yes
Feed At Power On	Disabled		Yes	Yes
Max Feed	0 dot		Yes	Yes
Paper End	Using I-mark		Yes	Yes
Head Base Position	Standard		Yes	Yes
Prioritize	Commands		Yes	Yes
Reprint	Disabled		Yes	Yes
Print End Position	0 dot		Yes	Yes

7.1.2 Interface Menu

Setting Item	Initial Value		User Reset	Factory Reset
	CL4NX	CL6NX		
Network	—		—	—
Settings	—		—	—
LAN	—		—	—
IPv4	—		—	—
Mode	DHCP		Yes/ Interface	Yes/ Interface
DHCP	—		—	—
IP Address	0.0.0.0		Yes/ Interface	Yes/ Interface
Netmask	255.255.255.0		Yes/ Interface	Yes/ Interface
Gateway	0.0.0.0		Yes/ Interface	Yes/ Interface
DNS	0.0.0.0		Yes/ Interface	Yes/ Interface
IPv6	—		—	—
Mode	Auto		Yes/ Interface	Yes/ Interface
DHCP	—		—	—
IP Address	::		Yes/ Interface	Yes/ Interface
Prefix Length	64		Yes/ Interface	Yes/ Interface
Gateway	::		Yes/ Interface	Yes/ Interface
DNS	::		Yes/ Interface	Yes/ Interface
Proxy	—		—	—
Enabled	Disabled		Yes	Yes
Server	—		Yes	Yes
Exclude	—		Yes	Yes
Wi-Fi	—		—	—
IPv4	—		—	—
Mode	DHCP		Yes/ Interface	Yes/ Interface
DHCP	—		—	—

Setting Item	Initial Value		User Reset	Factory Reset
	CL4NX	CL6NX		
IP Address	0.0.0.0		Yes/ Interface	Yes/ Interface
Netmask	255.255.255.0		Yes/ Interface	Yes/ Interface
Gateway	0.0.0.0		Yes/ Interface	Yes/ Interface
DNS	0.0.0.0		Yes/ Interface	Yes/ Interface
IPv6	—		—	—
Mode	Auto		Yes/ Interface	Yes/ Interface
DHCP	—		—	—
IP Address	::		Yes/ Interface	Yes/ Interface
Prefix Length	64		Yes/ Interface	Yes/ Interface
Gateway	::		Yes/ Interface	Yes/ Interface
DNS	::		Yes/ Interface	Yes/ Interface
Proxy	—		—	—
Enabled	Disabled		Yes	Yes
Server	—		Yes	Yes
Exclude	—		Yes	Yes
Wi-Fi Protected Setup	—		—	—
Button (PBC)	—		—	—
PIN	—		—	—
Wi-Fi Direct	—		—	—
Device Name	SATO_PRINTER		Yes/ Interface	Yes/ Interface
Connect	—		—	—
Start Group	—		—	—
Remove Group	—		—	—
Disconnect	—		—	—
SSID	DIRECT-xx-SATO_PRINTER		—	—
IP Address	x.x.x.x		—	—
Passphrase	xxxxxxx		—	—

Setting Item	Initial Value		User Reset	Factory Reset
	CL4NX	CL6NX		
SSID	SATO_PRINTER		Yes/ Interface	Yes/ Interface
Hidden SSID	Enabled		Yes/ Interface	Yes/ Interface
Mode	Ad-hoc		Yes/ Interface	Yes/ Interface
Channel	6		Yes/ Interface	Yes/ Interface
Security	None		Yes/ Interface	Yes/ Interface
WEP Conf.	—		—	—
Authentication	Open system		Yes/ Interface	Yes/ Interface
Key Index	1		Yes/ Interface	Yes/ Interface
Key #1 - Key #4	—		Yes/ Interface	Yes/ Interface
WPA Conf.	—		—	—
WPA Authentication	Personal (PSK)		Yes/ Interface	Yes/ Interface
PSK	—		Yes/ Interface	Yes/ Interface
EAP Conf.	—		—	—
EAP Conf.	—		—	—
EAP Mode	FAST		Yes/ Interface	Yes/ Interface
Inner Method	MSCHAPv2		Yes/ Interface	Yes/ Interface
Username	—		Yes/ Interface	Yes/ Interface
Password	—		Yes/ Interface	Yes/ Interface
Anon. Outer ID	—		Yes/ Interface	Yes/ Interface
Verify Server Cert.	Enabled		Yes/ Interface	Yes/ Interface
Private Key P/W	—		Yes/ Interface	Yes/ Interface
PAC Auto Provisioning	Disabled		Yes/ Interface	Yes/ Interface

Setting Item	Initial Value		User Reset	Factory Reset
	CL4NX	CL6NX		
PAC P/W	—		Yes/ Interface	Yes/ Interface
Interface	Auto		Yes	Yes
Services	—		—	—
Ports	—		—	—
Port 1	1024		Yes/ Interface	Yes/ Interface
Port 2	1025		Yes/ Interface	Yes/ Interface
Port 3	9100		Yes/ Interface	Yes/ Interface
Flow Control	Status4 ENQ		Yes/ Interface	Yes/ Interface
BCC	Disabled		Yes/ Interface	Yes/ Interface
NTP	—		—	—
Enable	Disabled		Yes	Yes
Error	Disabled		Yes	Yes
Time Server IP	0.0.0.0		Yes	Yes
LPD	Enabled		Yes	Yes
FTP	Disabled		Yes	Yes
SNMP	—		—	—
sysContact	—		Yes	Yes
sysName	—		Yes	Yes
sysLocation	—		Yes	Yes
Agent	—		—	—
Enable	Disabled		Yes	Yes
Read-Only	—		—	—
SNMP Version	1|2c|3		Yes	Yes
Community	public		Yes	Yes
User	rouser		Yes	Yes
User Security	None		Yes	Yes
Authentication Protocol	MD5		Yes	Yes
Authentication Passphrase	mypassword		Yes	Yes
Privacy Protocol	DES		Yes	Yes
Privacy Passphrase	mypassword		Yes	Yes

Setting Item	Initial Value		User Reset	Factory Reset
	CL4NX	CL6NX		
Read-Write	—		—	—
SNMP Version	1|2c|3		Yes	Yes
Community	private		Yes	Yes
User	rwuser		Yes	Yes
User Security	None		Yes	Yes
Authentication Protocol	MD5		Yes	Yes
Authentication Passphrase	mypassword		Yes	Yes
Privacy Protocol	DES		Yes	Yes
Privacy Passphrase	mypassword		Yes	Yes
Traps	—		—	—
Enable	Disabled		Yes	Yes
SNMP Version	1		Yes	Yes
IP Version	4		Yes	Yes
Destinations	1		Yes	Yes
Destination 1	0.0.0.0		Yes	Yes
Destination 2	0.0.0.0		Yes	Yes
Destination 3	0.0.0.0		Yes	Yes
Community	trapcom		Yes	Yes
User	trapuser		Yes	Yes
Engine ID	Number generated from MAC address		Yes	Yes
Security	None		Yes	Yes
Authentication Protocol	MD5		Yes	Yes
Authentication Passphrase	mypassword		Yes	Yes
Privacy Protocol	DES		Yes	Yes
Privacy Passphrase	mypassword		Yes	Yes
Advanced	—		—	—
ARP Announcement	—		—	—
Additional	Enabled		Yes	Yes
Periodic	0		Yes	Yes
IEEE1284	—		—	—
Flow control	Status4 Multi		Yes/ Interface	Yes/ Interface
BCC	Disabled		Yes/ Interface	Yes/ Interface

Setting Item	Initial Value		User Reset	Factory Reset
	CL4NX	CL6NX		
RS-232C	—		—	—
Baudrate	115200		Yes/ Interface	Yes/ Interface
Parameters	8-N-1		Yes/ Interface	Yes/ Interface
Flow Control	STATUS4		Yes/ Interface	Yes/ Interface
BCC	Disabled		Yes/ Interface	Yes/ Interface
USB	—		—	—
Flow Control	Status4		Yes/ Interface	Yes/ Interface
BCC	Disabled		Yes/ Interface	Yes/ Interface
Bluetooth	—			
Enable	Enabled		Yes/ Interface	Yes/ Interface
Name	SATO PRINTER_xxxxxxxxxxxx (BD address)		Yes/ Interface	Yes/ Interface
Pin Code	0000		Yes/ Interface	Yes/ Interface
BD Address	xxxxxxxxxxxx		Yes/ Interface	Yes/ Interface
Firm version	spp3_vX.YY		Yes/ Interface	Yes/ Interface
Host BD Addr	—		Yes/ Interface	Yes/ Interface
Authentication	None		Yes/ Interface	Yes/ Interface
ISI	2048		Yes/ Interface	Yes/ Interface
ISW	18		Yes/ Interface	Yes/ Interface
PSI	2048		Yes/ Interface	Yes/ Interface
PSW	18		Yes/ Interface	Yes/ Interface
CRC Mode	Disabled		Yes/ Interface	Yes/ Interface
Flow Control	Status4 Multi		Yes/ Interface	Yes/ Interface

Setting Item	Initial Value		User Reset	Factory Reset
	CL4NX	CL6NX		
Ignore CR/LF	Disabled		Yes/ Interface	Yes/ Interface
Ignore CAN/DLE	Disabled		Yes/ Interface	Yes/ Interface
External I/O	—		—	—
Enable	Disabled		Yes/ Interface	Yes/ Interface
Signals	—		—	—
EXT 9PIN	MODE1		Yes/ Interface	Yes/ Interface
EXT Mode	TYPE4		Yes/ Interface	Yes/ Interface
Inputs	—		—	—
Start Print	PIN5		Yes/ Interface	Yes/ Interface
Reprint	PIN7		Yes/ Interface	Yes/ Interface
Outputs	—		—	—
Paper End/ Paper/Ribbon End (If RFID is installed)	PIN1		Yes/ Interface	Yes/ Interface
Ribbon End/ RFID Tag Error (If RFID is installed)	PIN3		Yes/ Interface	Yes/ Interface
Machine Error/ RFID Error (If RFID is installed)	PIN4		Yes/ Interface	Yes/ Interface
Print Done	PIN6		Yes/ Interface	Yes/ Interface
Offline	PIN9		Yes/ Interface	Yes/ Interface
Ribbon Near End	PIN10		Yes/ Interface	Yes/ Interface
Dispenser	OFF		Yes/ Interface	Yes/ Interface
EXT I/O Re-print	Disabled		Yes/ Interface	Yes/ Interface
RFID	—	—	—	—
Antenna Pitch	Standard	—	Yes	Yes
Write Power	10 dBm	—	Yes	Yes
Read Power	10 dBm	—	Yes	Yes

Setting Item	Initial Value		User Reset	Factory Reset
	CL4NX	CL6NX		
Tag Offset	0 mm	—	Yes	Yes
Reader Model	XXXXXXXXXXXXXXXX	—	Yes	Yes
Reader Version	XXXXXXXXXXXXXXXX	—	Yes	Yes
View	—	—	—	—
Memory Bank	EPC (UHF)/USER (HF)	—	Yes	Yes
Retry Mode	Retry	—	Yes	Yes
Retries	1	—	Yes	Yes
Mark bad tags	Enabled	—	Yes	Yes
MCS	—	—	—	—
MCS	Disabled	—	Yes	Yes
Chip Manufacturer	IMPINJ	—	Yes	Yes
Pre-Encoded Tag	Disabled	—	Yes	Yes
Assign Prefix	Auto	—	Yes	Yes
MCS Prefix Digit	3 bits	—	Yes	Yes
Input Prefix	0	—	Yes	Yes
Non-RFID Warning	Disabled	—	Yes	Yes
Log RFID Data	Disabled	—	Yes	Yes
Data To Record	EPC and TID	—	Yes	Yes
Output Error Mode	Level	—	Yes	Yes
Pulse Length	100 ms	—	Yes	Yes
Counters	—	—	—	—
Life time	—	—	—	—
Count Success	000000	—	No	Yes
Count Failure	000000	—	No	Yes
Count Total	000000	—	No	Yes
User	—	—	—	—
Count Success	000000	—	Yes	Yes
Count Failure	000000	—	Yes	Yes
Count Total	000000	—	Yes	Yes

7.1.3 Applications Menu

Setting Items	Initial Value		User Reset	Factory Reset
	CL4NX	CL6NX		
Protocol	AUTO		Yes	Yes
SBPL	—		—	—
Show Error	Disabled		Yes	Yes
Standard Code	Enabled		Yes	Yes
Orientation	Portrait		Yes	Yes
Font Settings	—		—	—
Zero Slash	Enabled		Yes	Yes
Kanji	—		—	—
Kanji Set	GB18030		Yes	Yes
Character Code	GB18030		Yes	Yes
Proportional	Enabled		Yes	Yes
Code Page	858		Yes	Yes
€	d5		Yes	Yes
Compatible	—		—	—
CODE128(C) Zero Fill	Disabled		Yes	Yes
SZPL	—		—	—
Label	—		—	—
Shift	0 dot		Yes	Yes
Top	0		Yes	Yes
Caret	94 (^)		Yes	Yes
Delimiter	44 (,)		Yes	Yes
Tilde	126 (~)		Yes	Yes
Clock format	(none)		Yes	Yes
SIPL	—		—	—
Font setting	—		—	—
Zero Slash	Disabled		Yes	Yes
€	d5		Yes	Yes
Code Page	1252		Yes	Yes
Proportional	Disabled		Yes	Yes
STCL	—		—	—
Command Head	—		—	—
Control Code	AUTO		Yes	Yes

Setting Items	Initial Value		User Reset	Factory Reset
	CL4NX	CL6NX		
1st Byte Code	27		Yes	Yes
2nd Byte Code	10		Yes	Yes
3rd Byte Code	0		Yes	Yes
Font setting	—		—	—
Zero Slash	Disabled		Yes	Yes
€	d5		Yes	Yes
Code Page	850		Yes	Yes
SDPL	—		—	—
Control Code	—		—	—
Code Type	Standard		Yes	Yes
SOH	01		Yes	Yes
STX	02		Yes	Yes
CR	0D		Yes	Yes
CNTBY	5E		Yes	Yes

7.1.4 System Menu

Setting Item	Initial Value		User Reset	Factory Reset
	CL4NX	CL6NX		
Regional	—		—	—
Messages	English US		Yes	Yes
Unit	dot		Yes	Yes
Time	00:00		No	No
Date	(2000-01-01)		No	No
Time Zone	—		Yes	Yes
Region	Europe		Yes	Yes
City	London		Yes	Yes
Notifications	—		—	—
Clean Printhead	—		—	—
Clean Printhead	Disabled		Yes	Yes
Cleaning Interval	400 m		Yes	Yes
Change Printhead	—		—	—
Change Printhead	Disabled		Yes	Yes
Printhead Interval	100 km		Yes	Yes
Change Cutter	—		—	—
Change Cutter	Disabled		Yes	Yes
Cutter Life	1000 Kcuts		Yes	Yes
Change Platen	—		—	—
Change Platen	Disabled		Yes	Yes
Platen Interval	100 km		Yes	Yes
Sound	—		—	—
Error Sound	Medium		Yes	Yes
Energy Saving	—		—	—
Sleep Timeout	60 min		Yes	Yes
LCD Brightness	7		No	Yes
Show total count	Disabled		Yes	Yes
Passwords	—		—	—
Password Enable	Disabled		No	Yes
Install Security	None		No	Yes

7.1.5 Tools Menu

Setting Item	Initial Value		User Reset	Factory Reset
	CL4NX	CL6NX		
Test print	—		—	—
Factory	—		—	—
Label Width	Large		—	—
Pitch	0		No	No
Offset	0		No	No
Darkness Adjust	50		No	No
Configure List	—		—	—
Label Width	Small		—	—
Label Length	203 dpi: 800 dots 305 dpi: 1200 dots 609 dpi: 2400 dots	203 dpi: 800 dots 305 dpi: 1200 dots	Yes	Yes
Pitch	0		No	No
Offset	0		No	No
Darkness Adjust	50		No	No
Configure QR	—		—	—
Label Width	Small		—	—
Label Length	203 dpi: 800 dots 305 dpi: 1200 dots 609 dpi: 2400 dots	203 dpi: 800 dots 305 dpi: 1200 dots	Yes	Yes
Pitch	0		No	No
Offset	0		No	No
Darkness Adjust	50		No	No
Paper Sensor	—		—	—
Label Width	Small		—	—
Label Length	203 dpi: 800 dots 305 dpi: 1200 dots 609 dpi: 2400 dots	203 dpi: 800 dots 305 dpi: 1200 dots	Yes	Yes
Pitch	0		No	No
Offset	0		No	No
Darkness Adjust	50		No	No
HEX-Dump	—		—	—
Hex Dump Mode	Disabled		Yes	Yes
Reset	—		—	—

Setting Item	Initial Value		User Reset	Factory Reset
	CL4NX	CL6NX		
Profiles	—		—	—
Delete	—		—	—
Load	—		—	—
Save	—		—	—
Start with	—		Yes	Yes
Certificates	—		Yes/ Interface	Yes
Startup Guide	Enabled		No	Yes

7.1.6 Information Menu

Setting Item	Initial Value		User Reset	Factory Reset
	CL4NX	CL6NX		
Help	—		—	—
Build Version	—		—	—
Applications	—		—	—
Installation Log	—		—	—
Print Module	—		—	—
Counters	—		—	—
Head	—		—	—
Life	Measured value		No	No
Head 1	Measured value		No	No
Head 2	Measured value		No	No
Head 3	Measured value		No	No
Cutter	0		No	No

7.2 Media Sensor Positions and Media Stop Positions

The media stop positions with the media sensor and various operation modes are as follows:

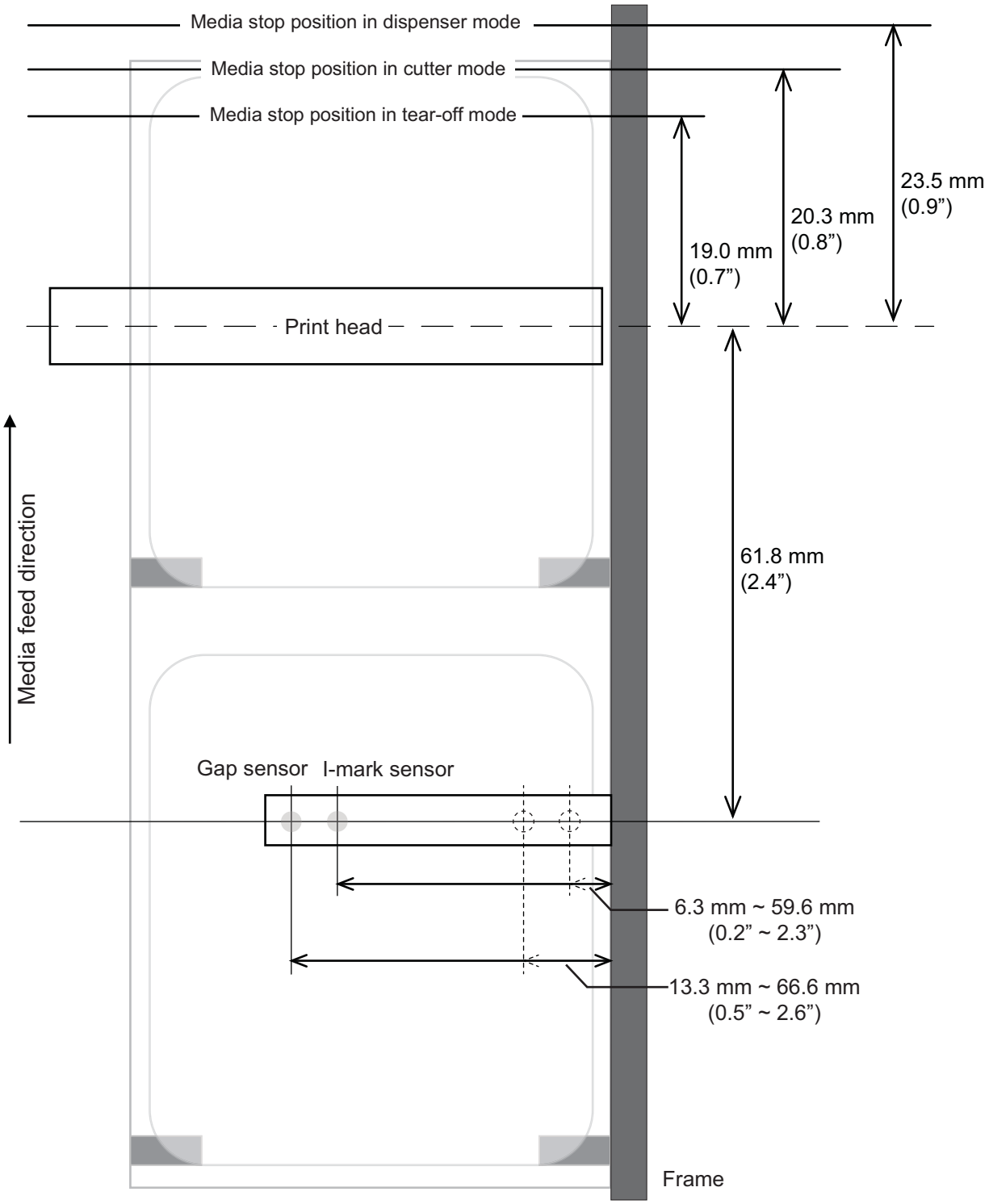

7.3 Replacing the Print Head

You can easily remove and replace a damaged or worn print head.

⚠ WARNING

- Do not touch the power button, connect or disconnect the power cord while your hands are wet. Doing so could cause an electric shock.
- Disconnect the power cord from the AC outlet before you replace the print head.
- Wear gloves before replacing the print head, to prevent damage to the print head.

1 Make sure that the printer is in power off mode, then disconnect the power cord from the AC outlet.

2 Open the top cover.

⚠ CAUTION

Open the top cover fully to prevent accidental drop of the cover.

3 Push the **head lock lever** ① towards the rear to unlock the **print head**.

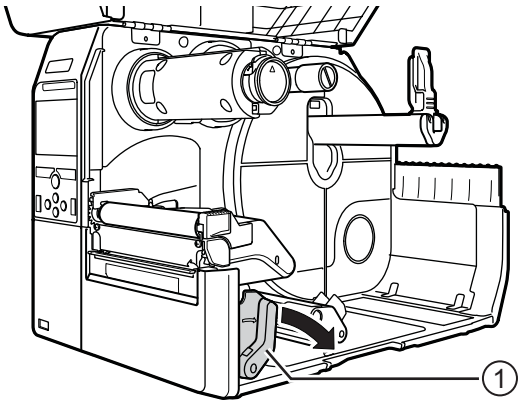

⚠ CAUTION

- The print head and its surroundings are hot after printing. Be careful not to touch it, to avoid being burned.
- Touching the edge of the print head with your bare hand could cause injury.

4 Remove the media and ribbon if they are already loaded.

Refer to **Section 3.3 Removing the Ribbon** and the reverse procedure in **Section 3.5 Loading Media**.

5 Press the **lever** ② to remove the **print head** ③.

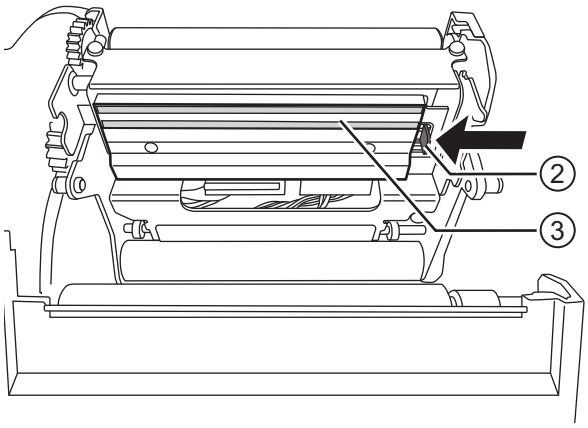

⚠ CAUTION (for CL4NX only)

For UHF RFID models, the UHF RFID antenna is installed on the print head. Be careful not to overly pull the antenna cable when replacing the print head. Contact your SATO reseller or technical support center for more information.

6 Disconnect all the **connectors** ④ from the defective **print head** ③.

In total, there are two connectors for CL4NX and three connectors for CL6NX.

7 Connect all the **connectors** ④ to the new **print head**.

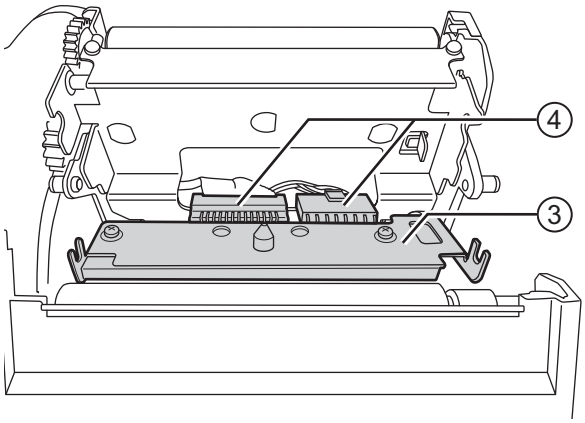

⚠ CAUTION

Handle the print head with care.
Do not contaminate or scratch the sensitive print head surface.

8 Install the new **print head**.

Install the print head so that it is locked with a click sound.

9 Load the media and ribbon back if you remove them in step 4.

Refer to **Section 3.5 Loading Media** and **Section 3.2 Loading the Ribbon**.

7.4 Replacing the Platen Roller

You can easily remove and replace a damaged or worn platen roller.

⚠ WARNING

- Do not touch the power button, connect or disconnect the power cord while your hands are wet. Doing so could cause an electric shock.
- Disconnect the power cord from the AC outlet before you replace the platen roller.

1 Make sure that the printer is in power off mode, then disconnect the power cord from the AC outlet.

2 Open the top cover.

⚠ CAUTION

Open the top cover fully to prevent accidental drop of the cover.

3 Push the **head lock lever** ① towards the rear to unlock the **print head**.

⚠ CAUTION

- The print head and its surroundings are hot after printing. Be careful not to touch it, to avoid being burned.
- Touching the edge of the print head with your bare hand could cause injury.

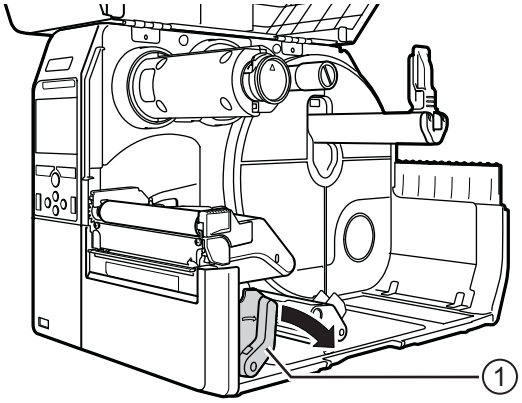

4 Lift the **lever** ② to unlock the **platen roller** ③, then pull out the **platen roller** ③.

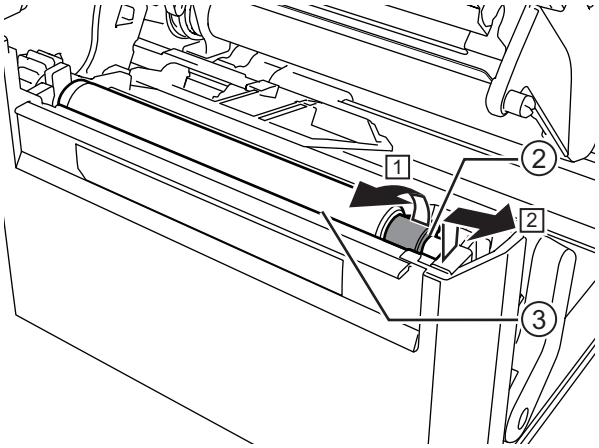

5 Install the new platen roller. Make sure that the first **tab** ④ on the driving end of the platen roller is pointing upward. Then push the platen roller in the direction 3 so that the first **tab** ④ is fixed in the **groove** ⑤ at the driving side.

6 Next, make sure that the second **tab** ⑥ on the driven end of the platen roller is pointing upward. And then push the platen roller again in the direction 3 so that the second **tab** ⑥ is fixed in the **groove** ⑦ at the driven side.

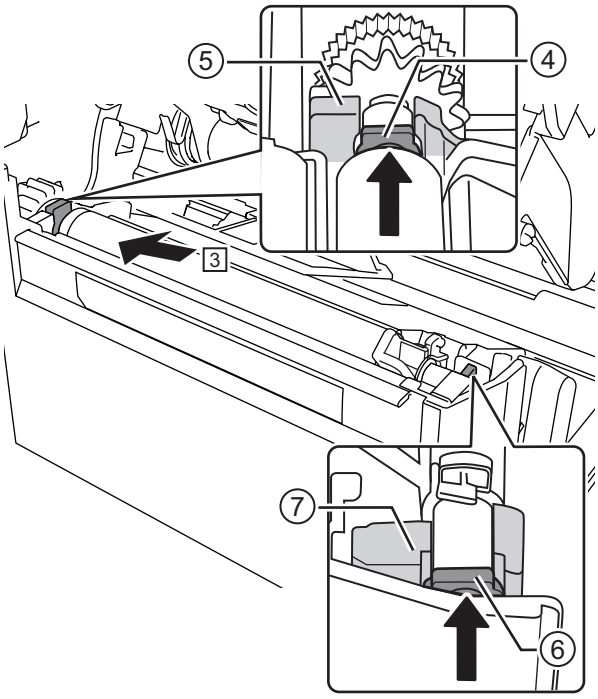

7 Turn the **lever** ② back to lock the platen roller.

7.4.1 Guideline to Replace the Linerless Platen Roller (CL4NX only)

The linerless platen roller has a blue striped marking on the left side. When the blue striped marking started to fade off, it indicates that you should replace the linerless platen roller.
This is only a general guideline, the condition of the platen roller wears out varies depending on the used media. In any cases, replace the worn platen roller when it affected the printing quality of the printer.

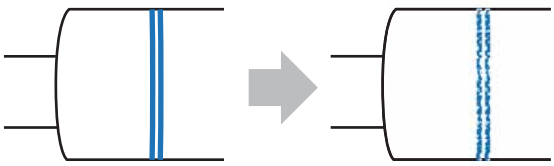

7.5 Optional UHF RFID Configuration (CL4NX only)

This chapter explains the procedures on how to configure the printer to encode your inlays.

1 Examine the media to determine the printer settings.

Refer to the **CL4NX UHF Inlay Configuration Guide** for the measurements you should take and what they mean, as well as a list of inlays and their required configurations.

2 Press the ⏻ power button on the operator panel for more than one second to power on the printer.

3 When the printer is in online mode, press the ⏯ button on the operator panel to change to offline mode.

4 Press the ↵ button to show the **Settings** menu.

5 Press the ◀/▶ buttons to select **Interface** and then press the ↵ button.

6 Press the ▲/▼ buttons to select **RFID** and then press the ↵ button.

The RFID screen shows.

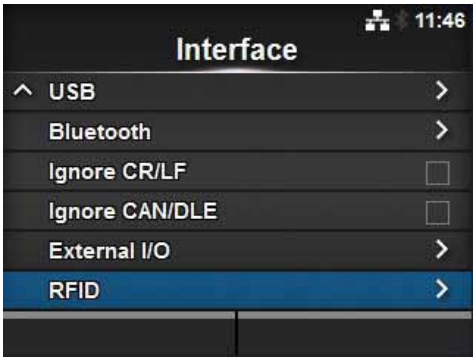

7 Press the ▲/▼ buttons to select the item you want to set. Then press the ↵ button to go to the adjustment screen.

Refer to **Interface** > **RFID (CL4NX only)** menu of **Section 4.3 Settings Menu Tree Structure** for details on the configuration items.

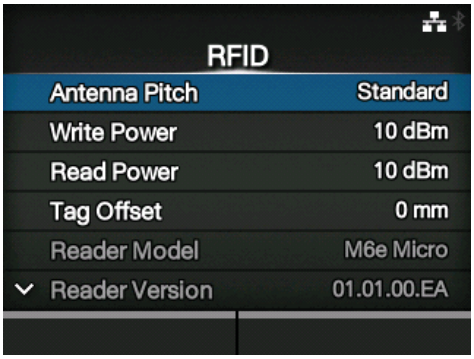

8 Open the **top cover** ①.

⚠ CAUTION

Open the top cover fully to prevent accidental drop of the cover.

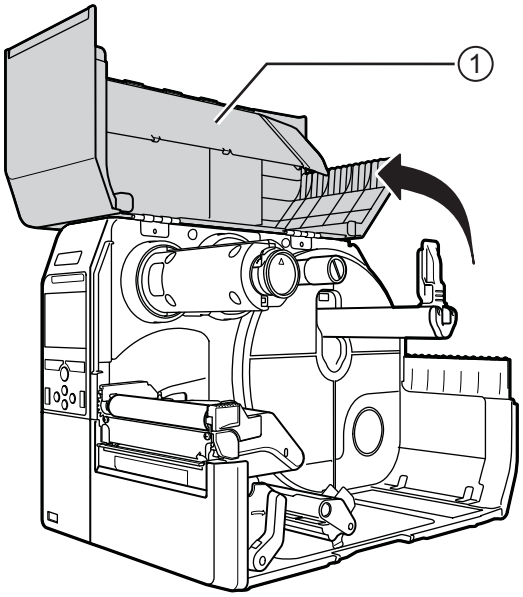

9 Push the **head lock lever** ② towards the rear to unlock the print head.

⚠ CAUTION

- The print head and its surroundings are hot after printing. Be careful not to touch it, to avoid being burned.
- Touching the edge of the print head with your bare hand could cause injury.

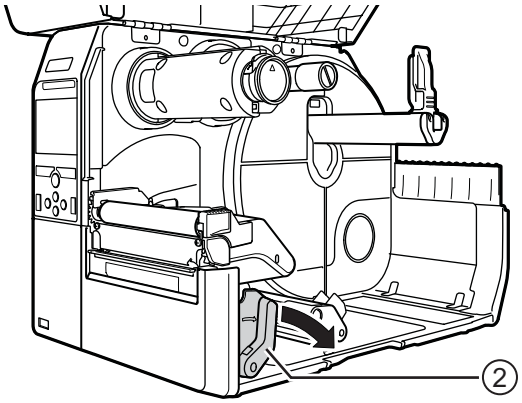

10 Adjust the position of the RFID antenna. Rotate the **dial** ③ to align the **pointer** ④ with the media being used.

When the **Antenna Pitch** is set to **Standard** in the **Interface** > **RFID** menu, adjust the physical position of the antenna according to the settings required for the specific media and inlay used. Refer to the "**Antenna Position**" of the **UHF Inlay Placement & Configuration Table** in the **CL4NX UHF Inlay Configuration Guide**.

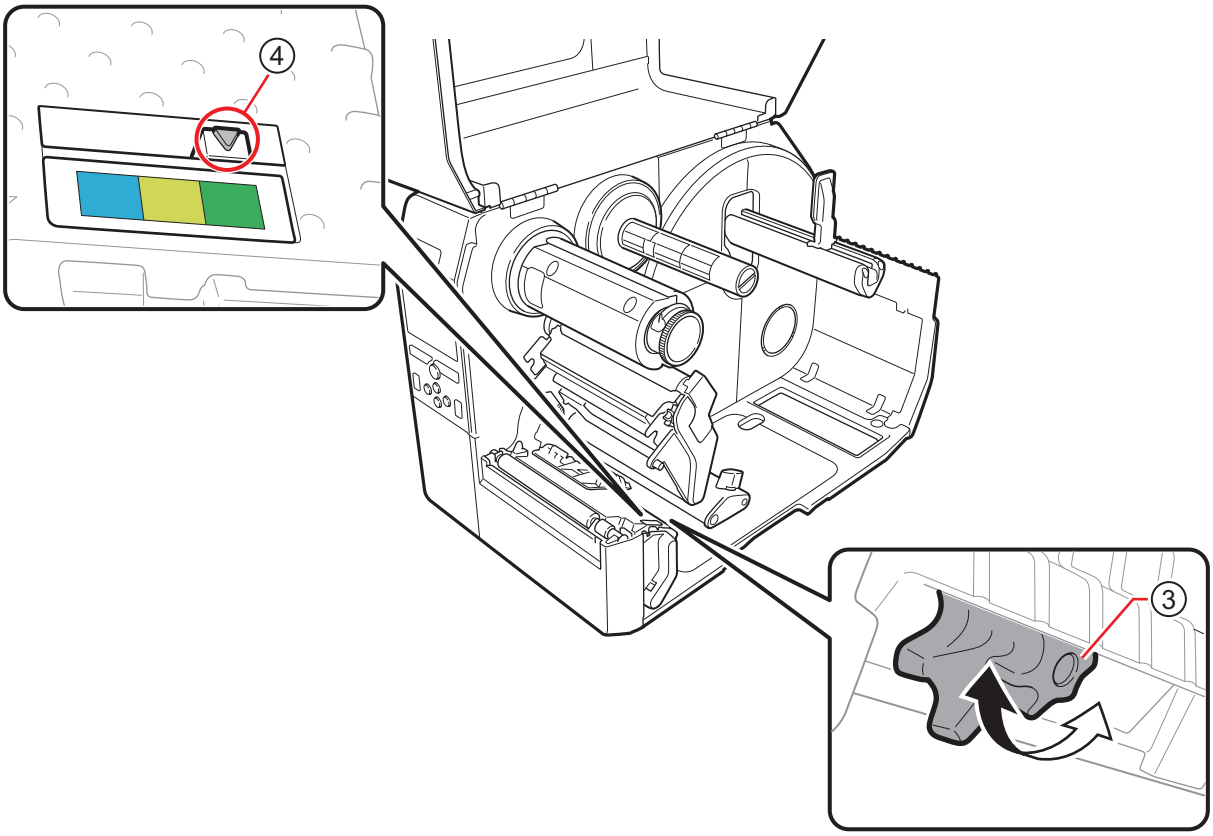

11 Load the media and ribbon.

Refer to **Section 3.2 Loading the Ribbon** and **Section 3.5 Loading Media** for details.

12 Confirm the operation by printing/encoding a media.

Make sure that you read the data and check that it is correctly encoded.

7.5.1 Printing RFID Tag Errors

If the recorded data on a tag is incomplete due to writing on a defective tag, the printer will print an RFID tag error to the defective media. This function is to prevent the distribution of defective media with a tag error.
When an RFID tag error occurs, the printer prints a slash and the error message, such as “WRITE TAG ERROR” or “TAG NOT FOUND”. The position to print the message and slash is set using the specified media size command <A1>.
For a write error such as “WRITE TAG ERROR”, the printer continues to print the first sixteen or thirty-two bytes of the write data.
The diagram below shows the message and slash printed on the position based on the media size specified by the normal print.

WRITE TAG ERROR in RFID write command
For other errors, the printer prints the error message accordingly.

Read error in UID/EPC/IDm print command <TU> or TAG NOT FOUND error

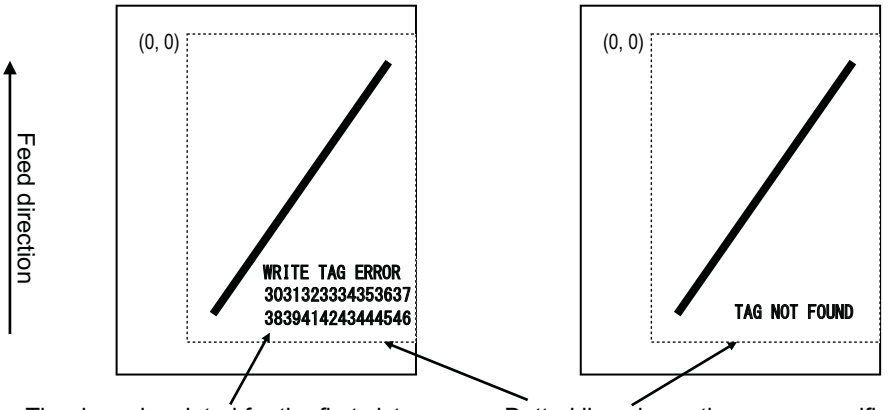

TAG NOT FOUND error in RFID write command

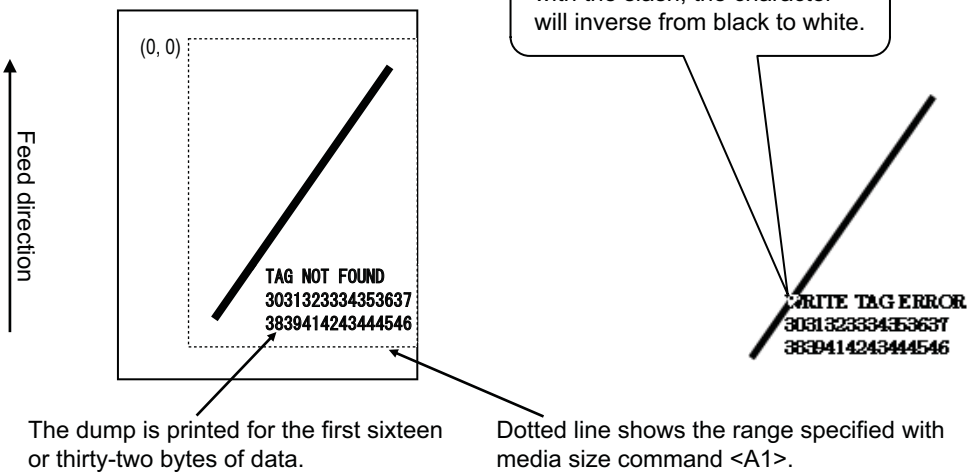

*(0,0): The origin of the range specified by the media size command <A1>

When using the NFC label, as the label size is small (P30 X W40 mm) and not enough for setting margin, the slash and error message are printed overlap on each other. The overlapped area are inverse from black to white. There is no dump printing.

TAG NOT FOUND error in RFID write command

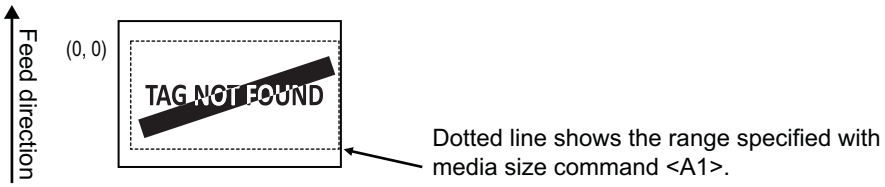

If not specified by the media size command <A1>, the printer prints the RFID error using a fixed size of P30 X W40 mm. When a character overlaps with the slash, the character will inverse from black to white.

WRITE TAG ERROR in RFID write command

For other errors, the printer prints the error message accordingly.

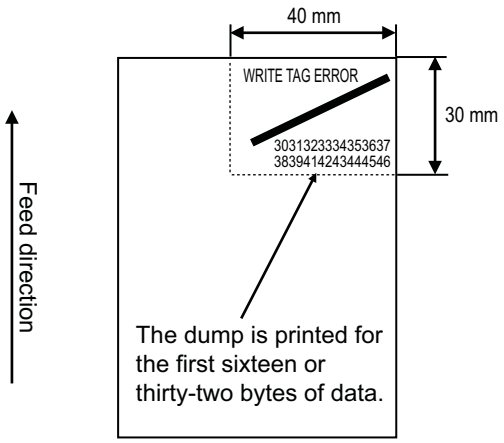

Read error in UID/EPC/IDm print command <TU> or TAG NOT FOUND error

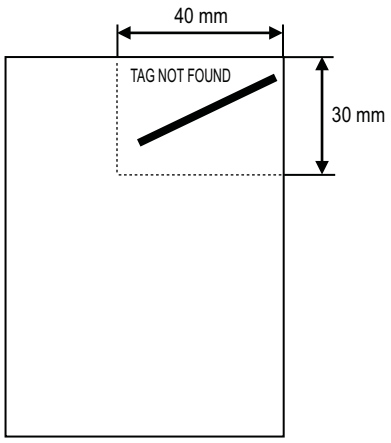

TAG NOT FOUND error in RFID write command

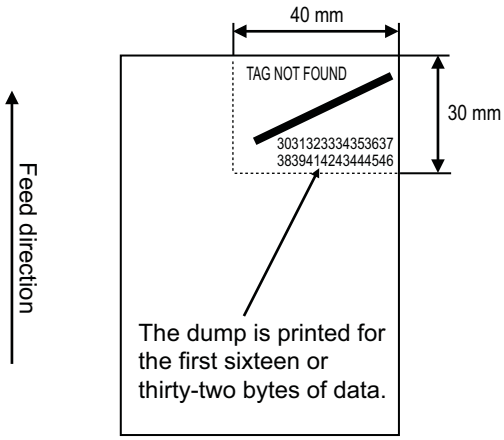

The types of errors to print are as follows:

Message	Cause and Countermeasure	
TAG NOT FOUND	Cause:	Did not find the tag to print, or failed to read the tag.
	Countermeasure:	Confirm the inlay operation and check the printer/antenna configuration.
WRITE TAG ERROR	Cause:	Failed to write the tag.
	Countermeasure:	Confirm the inlay operation and check the printer/antenna configuration.
PROTECT (TAG) ERROR	Cause:	1. Tried to write to a locked tag. 2. Tried to write to an address that is not permitted.
	Countermeasure:	Use media that is not locked.
VERIFY TAG ERR(OR)	• **Only for ISO/IEC 15693, ISO/IEC 14443 Type A**	
	Cause:	The written data and read data do not match.
	Countermeasure:	Confirm the inlay operation and check the printer/antenna configuration.
LOCKING ERROR	Cause:	Failed to lock the tag.
	Countermeasure:	Check the media.
WRONG TID ERROR	• **Only for ISO/IEC 15693**	
	Cause:	Read the UID of the tag other than the specified tag.
	Countermeasure:	Check the tag type setting and the label.
MULTI TAGS ERROR	• **Only for ISO/IEC 15693, ISO/IEC 14443 Type A**	
	Cause:	Multiple tags detected at a time.
	Countermeasure:	Confirm the inlay operation and check the printer/antenna configuration.
DIFFER EPC ERROR	• **Only for UHF**	
	Cause:	Detected inconsistent EPC during a series of processes.
	Countermeasure:	Check the media.
CHIP MAKER ERR.	• **Only for UHF**	
	Cause:	Incorrect tag chip maker is specified when specifying the MCS setting and encoding the SGTIN96.
	Countermeasure:	Check the media, and correct the tag chip maker.
MCS NOT SUPPORT	• **Only for UHF**	
	Cause:	Unsupported inlay (IC chip) is used when specifying the MCS setting and encoding the SGTIN96.
	Countermeasure:	Check the media, and change it to supported inlay.

7.5.2 RFID Error and Reset Timing

Error signal output with one-shot pulse

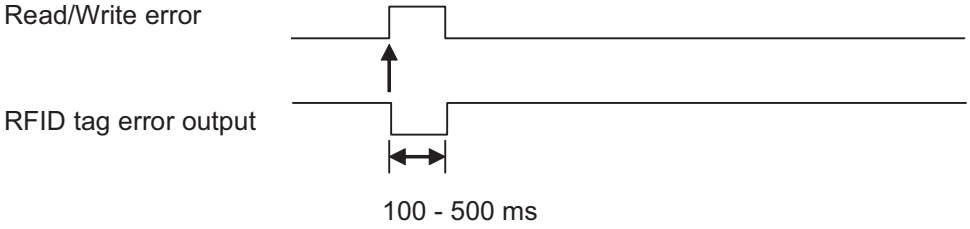

Error signal output with long pulse

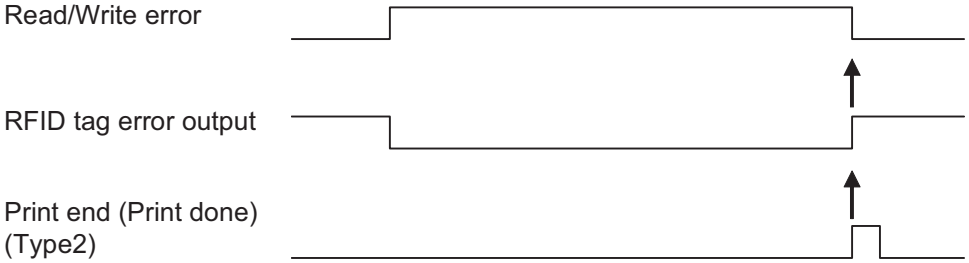

When the reprint count reaches the specified number, the RFID tag error and Machine error are outputted at a time. The machine error output is always a long pulse.

Timing chart of error signal output with one-shot pulse

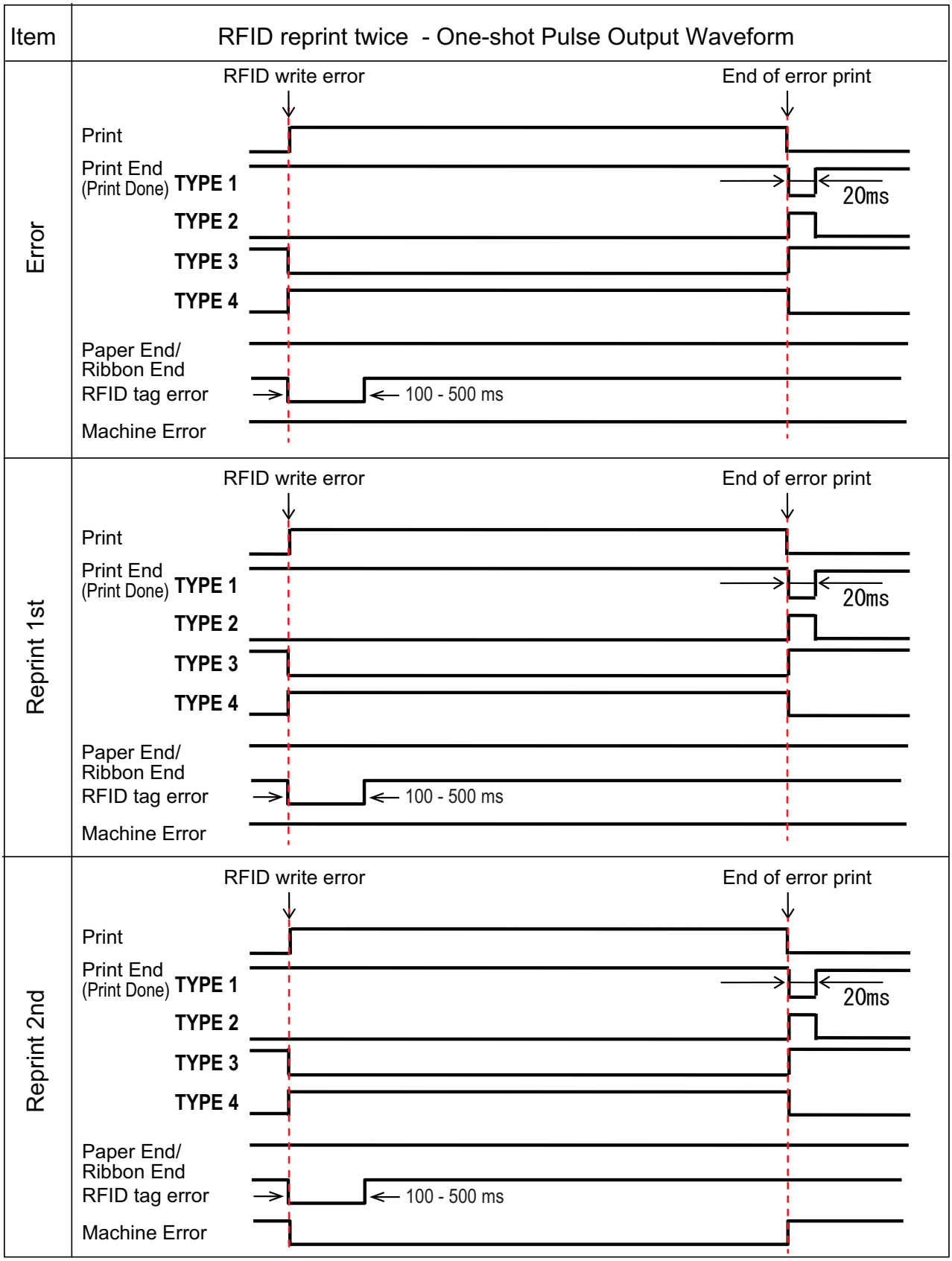

Timing chart of error signal output with long pulse

Item	RFID reprint twice - Level Output Waveform
Error	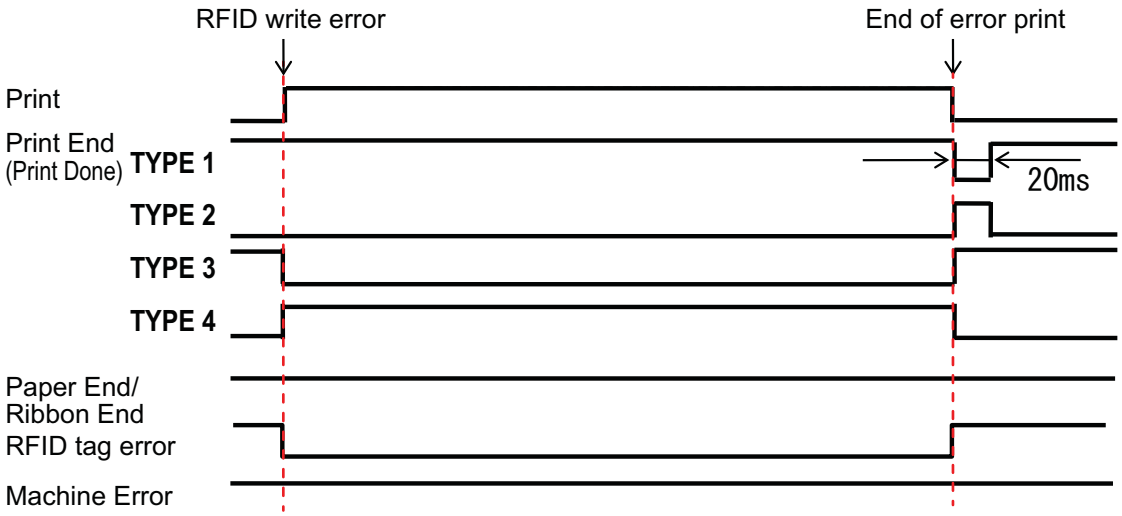
Reprint 1st	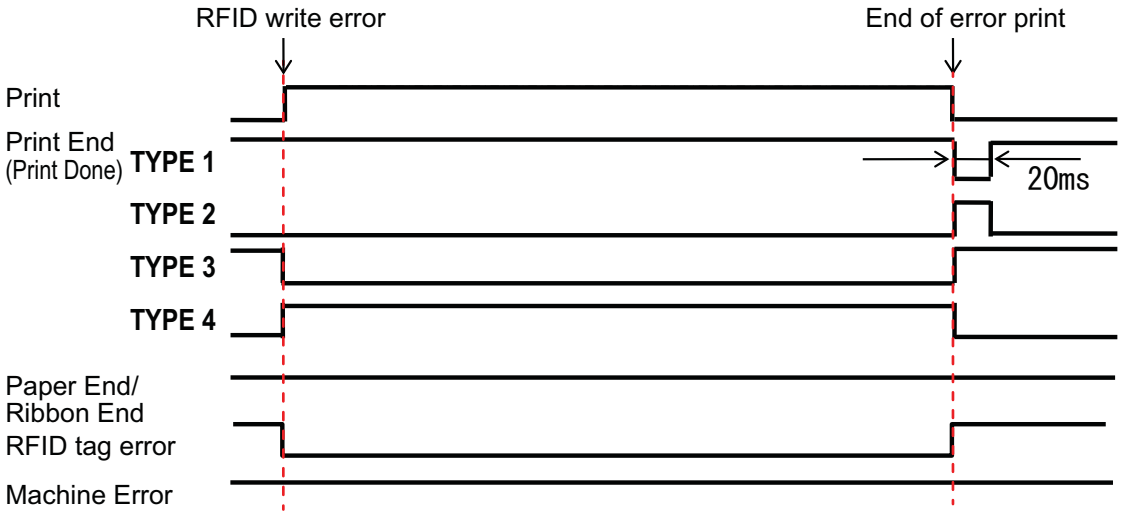
Reprint 2nd	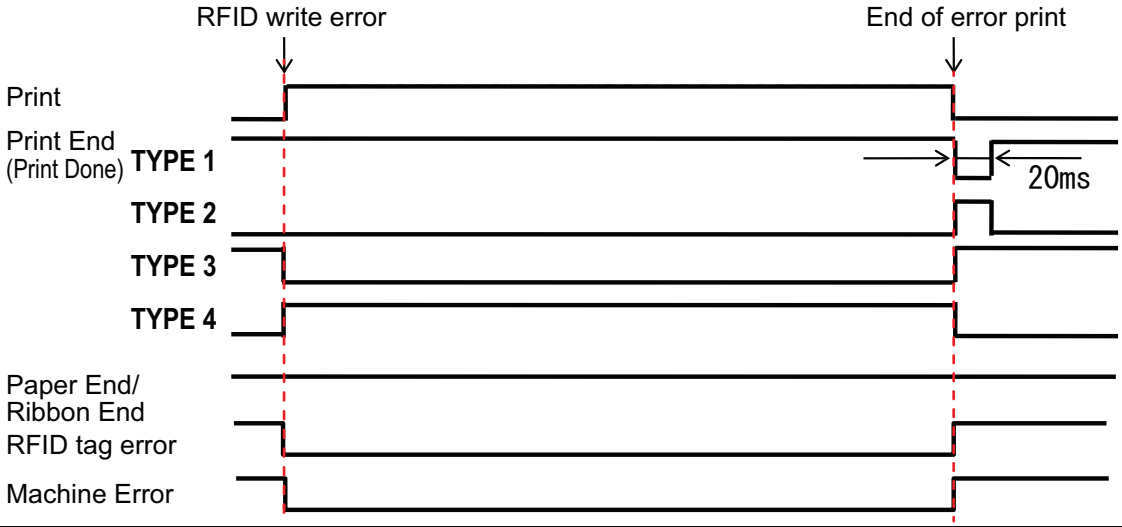

7.5.3 External (EXT) Signal Interfaces when RFID Mode is Enabled

Comparison of EXT signal between RFID Mode is disabled or enabled.

RFID Mode disabled.

Pin No.	Signal	I/O
1	Label End	Output
2	Ground	-
3	Ribbon End	Output
4	Machine Error	Output
5	Print Start (PRIN)	Input
6	Print Done (PREND)	Output
7	Reprint (PRIN2)	Input
8	External Power Supply	Input
9	Online/Offline	Output
10	Ribbon Near End	Output
11	N/A	-
12	+24V	Output
13	+5V	Output
14	Frame Ground	-

RFID Mode enabled.

Pin No.	Signal	I/O
1	**Label End + Ribbon End**	**Output**
2	Ground	-
3	**RFID Tag Error**	**Output**
4	**Machine Error/RFID Error**	**Output**
5	Print Start (PRIN)	Input
6	Print Done (PREND)	Output
7	Reprint (PRIN2)	Input
8	External Power Supply	Input
9	Online/Offline	Output
10	Ribbon Near End	Output
11	N/A	-
12	+24V	Output
13	+5V	Output
14	Frame Ground	-

Standard specification is applied when the RFID Mode is set to Disabled. Functions shown by shading are applied when the RFID Mode is set to Enabled.

7.5.4 RFID Printing Tips

Recommended non-printable zone

Avoid printing barcodes or characters directly on top of an RFID chip. The uneven surface will negatively affect the print quality.

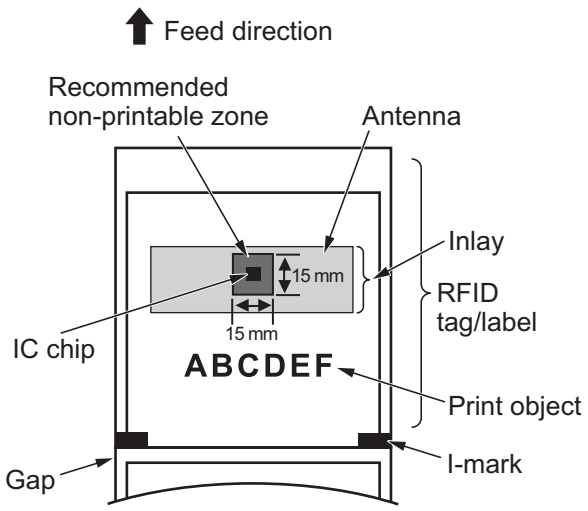

7.6 Printer Specifications

Specifications are subject to change without notice.

7.6.1 Hardware

Model	CL4NX	CL6NX
Dimensions and Weight		
Width	271 mm (10.67”)	338 mm (13.31")
Height	321 mm (12.64”)	321 mm (12.64”)
Depth	457 mm (18.00”)	457 mm (18.00”)
Weight	Approximately 15.1 kg (33.28 lbs.)	Approximately 20.3 kg (44.75 lbs.)
Power Supply		
Input Voltage	AC 100 V - 240 V ±10%	
Frequency	50 - 60 Hz	
Power Consumption	At peak: 180 W / 190 VA (Print ratio 30%) Standby: 19.5 W / 40 VA Input voltage condition: AC 230 V / 50 Hz	At peak: 240 W / 308 VA (Print ratio 30%) Standby: 23 W / 63 VA Input voltage condition: AC 230 V / 50 Hz
Processing		
CPU	CPU1: 800 MHz, 32 Bit CPU2: 800 MHz, 32 Bit	
Flash ROM	CPU1: 2 GB, CPU2: 4 MB	
SDRAM	CPU1: 256 MB, CPU2: 64 MB	
Receive Buffer	Maximum: 2.95 MB Near full: 2 MB	
Operation		
LCD	TFT color 3.5 inch (88.9 mm)	
LED	STATUS: Blue/Red	
Environmental Conditions (Without Media and Ribbon)		
Operating Temperature	Continuous/Cutter/Tear-off mode: 0 to 40 °C (32 to 104 °F) Dispenser/Linerless mode: 5 to 35 °C (41 to 95 °F)	
Storage Temperature	-20 to 60 °C (-4 to 140 °F)	
Operating Humidity	Continuous/Dispenser/Cutter/ Tear-off mode: 30 to 80% RH (Non-condensing) Linerless mode: 30 to 75% RH (Non-condensing)	30 to 80% RH (Non-condensing)
Storage Humidity	30 to 90% RH (Non-condensing)	

Model	CL4NX	CL6NX
Print		
Print Method	Direct thermal and thermal transfer	
Print Speed	203 dpi: 2 to 10 inch/sec (50.8 to 254 mm/sec) 305 dpi: 2 to 8 inch/sec (50.8 to 203.2 mm/sec) 609 dpi: 2 to 6 inch/sec (50.8 to 152 mm/sec) Linerless mode: 2 to 6 inch/sec (50.8 to 152 mm/sec)	203 dpi: 2 to 10 inches/sec (50.8 to 254 mm/sec) 305 dpi: 2 to 8 inches/sec (50.8 to 203.2 mm/sec)
Resolution	203 dpi (8 dots/mm) 305 dpi (12 dots/mm) 609 dpi (24 dots/mm)	203 dpi (8 dots/mm) 305 dpi (12 dots/mm)
Non-printable Area	Pitch direction (Excludes liner) Top: 1.5 mm (0.06”), Bottom: 1.5 mm (0.06”) Width direction (Excludes liner) Left: 1.5 mm (0.06”), Right: 1.5 mm (0.06”)	
Printable Area	203 dpi: Length 2500 mm (98.42”) x Width 104 mm (4.09”) 305 dpi: Length 1500 mm (59.05”) x Width 104 mm (4.09”) 609 dpi: Length 400 mm (15.75”) x Width 104 mm (4.09”)	203 dpi: Length 2500 mm (98.42”) x Width 104 mm (4.09”) 305 dpi: Length 1500 mm (59.05”) x Width 104 mm (4.09”)
Print End Position	203 dpi: 1 to 20000 dots 305 dpi: 1 to 18000 dots 609 dpi: 1 to 9600 dots	203 dpi: 1 to 20000 dots 305 dpi: 1 to 18000 dots
Print Darkness	Darkness level: 1 to 10 Darkness range: A	
Sensors		
I-mark (Reflective Type)	Position and sensitivity: Adjustable	
Gap (Transmissive Type)	Position and sensitivity: Adjustable	
Head Open	Fixed	
Label End Sensor	Detect with I-mark sensor or Gap sensor	
Ribbon End/ Ribbon Near End	Fixed	
Dispenser	Fixed * If linerless kit or dispenser unit is installed.	Fixed * If the the dispenser unit is installed.
Cutter	Fixed * If cutter unit or linerless kit is installed.	Fixed * If the cutter unit is installed.

7.6.2 Ribbon and Media

Model	CL4NX	CL6NX
Ribbon (Use genuine ribbon made by SATO.)		
Size	Length: maximum 600 m (1968.5 ft.) Width: 39.5 mm to 128 mm (1.55” to 5.04”) * The maximum length varies depending on the ribbon type. * Use the ribbon that is wider than the media.	Length: maximum 600 m (1968.5 ft.) Width: 39.5 mm to 177 mm (1.55” to 6.98”) * The maximum length varies depending on the ribbon type. * Use the ribbon that is wider than the media.
Wind Direction	Face-out/Face-in	
Winding Method	Coreless	
Media (Use genuine media made by SATO.)		
Type	Media roll (Face-in wound/face-out wound), Fan-fold media	
Size		
Continuous		
Pitch	203 dpi: 6 to 2497 mm (0.24” to 98.30”) 305 dpi: 6 to 1497 mm (0.24” to 58.94”) 609 dpi: 6 to 397 mm (0.24” to 15.63”) RFID mode: 13 to 240 mm (0.51” to 9.45”)	203 dpi: 16 to 1249 mm (0.63” to 49.17”) 305 dpi: 16 to 1249 mm (0.63” to 49.17”)
(With Liner)	203 dpi: 9 to 2500 mm (0.35” to 98.42”) 305 dpi: 9 to 1500 mm (0.35” to 59.05”) 609 dpi: 9 to 400 mm (0.35” to 15.75”) RFID mode: 16 to 240 mm (0.63” to 9.45”)	203 dpi: 19 to 1252 mm (0.35” to 49.29”) 305 dpi: 19 to 1252 mm (0.35” to 49.29”)
Width (With Liner)	22 to 128 mm (0.87” to 5.04”) 25 to 131 mm (0.98” to 5.16”)	47 to 177 mm (1.85” to 6.96”) 52 to 182 mm (2.04” to 7.16”)
Tear-off/Cutter		
Pitch	203 dpi: 17 to 2497 mm (0.67” to 98.30”) 305 dpi: 17 to 1497 mm (0.67” to 58.94”) 609 dpi: 17 to 397 mm (0.67” to 15.63”) RFID mode: 17 to 240 mm (0.67” to 9.45”)	203 dpi: 16 to 1249 mm (0.63” to 49.17”) 305 dpi: 16 to 1249 mm (0.63” to 49.17”)
(With Liner)	203 dpi: 20 to 2500 mm (0.79” to 98.42”) 305 dpi: 20 to 1500 mm (0.79” to 59.05”) 609 dpi: 20 to 400 mm (0.79” to 15.75”) RFID mode: 20 to 240 mm (0.79” to 9.45”)	203 dpi: 19 to 1252 mm (0.35” to 49.29”) 305 dpi: 19 to 1252 mm (0.35” to 49.29”)
Width (With Liner)	22 to 128 mm (0.87” to 5.04”) 25 to 131 mm (0.98” to 5.16”)	47 to 177 mm (1.85” to 6.96”) 52 to 182 mm (2.04” to 7.16”)

Model	CL4NX	CL6NX
Media (Use genuine media made by SATO.)		
Size		
Dispenser with Liner Rewinder		
Pitch	203/305/609 dpi: 27 to 397 mm (1.06” to 15.63”) RFID mode: 27 to 240 mm (1.06” to 9.45”)	203/305 dpi: 27 to 397 mm (1.06” to 15.63”)
(With Liner)	203/305/609 dpi: 30 to 400 mm (1.18” to 15.75”) RFID mode: 30 to 240 mm (1.18” to 9.45”)	203/305 dpi: 30 to 400 mm (1.18” to 15.75”)
Width (With Liner)	22 to 128 mm (0.87” to 5.04”) 25 to 131 mm (0.98” to 5.16”)	47 to 177 mm (1.85” to 6.97”) 50 to 180 mm (1.97” to 7.01”)
Diameter of Liner Winding	Maximum 120 mm (4.72”)	
Linerless Kit		
Pitch	30 to120 mm (1.18” to 4.72”)	—
Width	32 to 128 mm (1.26” to 5.04”)	—
Roll Diameter (Media Roll)	Maximum 220 mm (8.66”) When using a dispenser with liner rewinder: maximum 220 mm (8.66”)	
Core Diameter (Media Roll)	76 mm, 101 mm (3”, 4”) When using a dispenser with liner rewinder: 76 mm (3”) * Recommend to use 4” core for thick paper (more than 150 µm), non-adhesive media and RFID tags (CL4NX only)/labels.	
Height (Fan-fold Media)	Maximum 200 mm (7.87”) * When the printer and media are configured to the same height.	
Thickness	0.06 to 0.268 mm (0.0024” to 0.011”)	

7.6.3 Interface

Model		CL4NX	CL6NX
Interface			
Standard	Built-in	USB Interface (Type B) LAN Interface Bluetooth Interface USB Interface (Type A) x 2	
	Extension Board	RS-232C Interface IEEE1284 Interface External Signal Interface (EXT)	
Option Board		Wireless LAN Interface	

7.6.4 Built-in Functions

Model	CL4NX	CL6NX
Functions		
Built-in Functions	Status return Graphic Sequential number Form overlay Character modification Black/white inversion Ruled line Dump list Format registration Outline font Outline modification Zero slash switching Guidance Video	
Self-diagnosis Functions	Broken head element check Head open detection Paper end detection Ribbon end detection Ribbon near-end detection Ribbon core non-lock detection Test print Cutter open check (If cutter unit is installed) Label detection at dispensing (If dispenser unit is installed)	
Adjustment Functions	Print Darkness Print Position Media Stop Position Buzzer LCD Brightness	

7.6.5 Printer Languages

Model	CL4NX	CL6NX
Printer Languages		
	SBPL SZPL SDPL SIPL STCL	

7.6.6 Fonts/Symbols/Barcodes

Model	CL4NX	CL6NX
Fonts		
Bitmap Fonts		
U	9 dots H x 5 dots W	
S	15 dots H x 8 dots W	
M	20 dots H x 13 dots W	
WB	30 dots H x 18 dots W	
WL	52 dots H x 28 dots W	
XU	9 dots H x 5 dots W	
XS	17 dots H x 17 dots W	
XM	24 dots H x 24 dots W	
XB	48 dots H x 48 dots W	
XL	48 dots H x 48 dots W	
X20	9 dots H x 5 dots W	
X21	17 dots H x 17 dots W	
X22	24 dots H x 24 dots W	
X23	48 dots H x 48 dots W	
X24	48 dots H x 48 dots W	
OCR-A	203 dpi: 22 dots H x 15 dots W 305 dpi: 33 dots H x 22 dots W 609 dpi: 66 dots H x 44 dots W	203 dpi: 22 dots H x 15 dots W 305 dpi: 33 dots H x 22 dots W
OCR-B	203 dpi: 24 dots H x 20 dots W 305 dpi: 36 dots H x 30 dots W 609 dpi: 72 dots H x 60 dots W	203 dpi: 24 dots H x 20 dots W 305 dpi: 36 dots H x 30 dots W
JIS208 Kanji Fonts (Mincho/Gothic)	16 dots H x 16 dots W 24 dots H x 24 dots W 22 dots H x 22 dots W 32 dots H x 32 dots W 40 dots H x 40 dots W	
JIS0213 Kanji Fonts (Gothic)	16 dots H x 16 dots W 24 dots H x 24 dots W 22 dots H x 22 dots W 32 dots H x 32 dots W 40 dots H x 40 dots W	
Compatible Kanji Fonts (Mincho)	16 dots H x 16 dots W 24 dots H x 24 dots W	
Simplified Chinese Characters	16 dots H x 16 dots W 24 dots H x 24 dots W	

Model	CL4NX	CL6NX
Fonts		
Bitmap Fonts		
Traditional Chinese Characters	16 dots H x 16 dots W 24 dots H x 24 dots W	
Korean Fonts	16 dots H x 16 dots W 24 dots H x 24 dots W	
Scalable Fonts		
Rasterized Font	SATO CG Sleek SATO CG Stream SATO 0 SATO Alpha Bold Condensed SATO Beta Bold Italic SATO Folio Bold SATO Futura Medium Condensed SATO Gamma SATO OCR-A SATO OCR-B SATO Sans SATO Serif SATO Vica SATO Hebe Sans SATO Hebe Sans Arabic SATO Hebe Sans Thai SATO Hebe Sans Hebrew SATO Hebe Sans Hindi SATO Gothic Traditional Chinese SATO Gothic Japanese SATO Gothic Simplified Chinese SATO Gothic Korean SATO Silver Serif SATO Mincho Traditional Chinese SATO Mincho Japanese SATO Mincho Simplified Chinese SATO Mincho Korean SATO Roman Arabic SATO Symbol Set SATO WingBats	
Outline Fonts	Helvetica Outline Font	
	JIS208 Kanji Outline Fonts	

Model	CL4NX	CL6NX
Barcodes		
1D Barcodes	UPC-A/UPC-E JAN/EAN-13/8 CODE39, CODE93, CODE128 GS1-128(UCC/EAN128) CODABAR(NW-7) ITF Industrial 2 of 5 Matrix 2 of 5 MSI Customer Barcode POSTNET UPC add-on code USPS BOOKLAND GS1 DataBar Omnidirectional GS1 DataBar Truncated GS1 DataBar Stacked GS1 DataBar Stacked Omnidirectional GS1 DataBar Limited GS1 DataBar Expanded GS1 DataBar Expanded Stacked	
2D Codes	QR Code Micro QR Code PDF417 Micro PDF Maxi Code GS1 Data Matrix Data Matrix (ECC200) Aztec Code	
Composite Symbols	EAN-13 Composite (CC-A/CC-B) EAN-8 Composite (CC-A/CC-B) UPC-A Composite (CC-A/CC-B) UPC-E Composite (CC-A/CC-B) GS1 DataBar Composite (CC-A/CC-B) GS1 DataBar Truncated Composite (CC-A/CC-B) GS1 DataBar Stacked Composite (CC-A/CC-B) GS1 DataBar Expanded Stacked Composite (CC-A/CC-B) GS1 DataBar Expanded Composite (CC-A/CC-B) GS1 DataBar Stacked Omnidirectional Composite (CC-A/CC-B) GS1 DataBar Limited Composite (CC-A/CC-B) GS1-128 Composite (CC-A/CC-B/CC-C)	

7.6.7 Options

Model	CL4NX	CL6NX
Options		
	1) Cutter unit 2) Dispenser unit (with internal liner rewinder) 3) Linerless kit 4) Wireless LAN interface kit 5 RTC (Calendar) kit 6) UHF RFID kit 7) HF RFID kit	1) Cutter unit 2) Simple Dispenser kit 3) Dispenser unit (with internal liner rewinder) 4) Wireless LAN interface kit 5) RTC (Calendar) kit

7.6.8 Accessories

Model	CL4NX	CL6NX
Accessories		
	1) Power cord 2) Documentations (Quick Guide, Global Warranty Program leaflet, etc.)	

7.6.9 Standards

Model	CL4NX	CL6NX
Standards		
Safety Standards	UL 60950-1 CSA C22.2 No.60950-1 EN60950-1 CCC KC RCM IRAM BIS EAC	UL 60950-1 CSA C22.2 No.60950-1 EN60950-1 CCC KC RCM IRAM BIS
EMC Standards	FCC-B, FCC-C ICES-003, IC EN55022 Class A, EN55024, R&TTE CCC, SRRC KC IDA SIRIM PTQC NTC DGPT RCM IRAM, CNC ANATEL WPC	
Environmental Standard RoHS	RoHS directive (six hazardous) restricts the use of six hazardous materials listed below. Hexavalent chromium . . . . . .Max. 0.1% Lead and lead compounds . . . . . .Max. 0.1% Mercury and mercury compounds . . . . . .Max. 0.1% Cadmium and cadmium compounds . . . . . .Max. 0.01% Polybrominated biphenyls (PBB) . . . . . .Max. 0.1% Polybrominated diphenyl ethers (PBDE) . . . . . .Max. 0.1%	
Energy Saving	International ENERGY STAR program Ver2.0	

7.7 Interface Specifications

For data communication with the host, this printer supports the following interfaces:
You can set the various interface settings of the printer through **Interface** in the **Settings** menu.

- USB (USB type B)
- LAN Ethernet
- Bluetooth
- RS-232C (DB 9 pins, female)
- IEEE1284 (Amphenol 36 pins)
- External signal (EXT) (Amphenol 14 pins)
- Wireless LAN

⚠ CAUTION

Do not connect or disconnect the interface cables (or use a switch box) with power supplied to either the printer or host. This may cause damage to the interface circuitry in the printer or host and is not covered by warranty.

Note

- Wireless LAN is an optional interface.
- You cannot use the wireless LAN interface and LAN interface at a time.

7.7.1 USB Interface

This interface complies with the USB2.0 standard.
Install the USB driver to the computer before use.

Basic Specifications	
Connector	USB Type B connector
Protocol	Status4, Status5
Power Supply	BUS Power through cable
Power Consumption	+5 V at 80 mA

Pin Assignments	
Pin No.	**Description**
1	VBus
2	-Data
3	+Data
4	GND

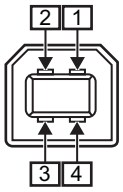

Cable Specifications	
Cable Connector	USB Type B connector
Cable Length	5 m (16.4 feet) or less

7.7.2 LAN Ethernet Interface

Basic Specifications	
Connector	RJ-45 Receptacle
Power Supply	Powered from the printer
Protocol	Status3 Status4 Status5
IP Address	IPv4 IPv6
Subnet Mask	IPv4 IPv6
Gateway Address	IPv4 IPv6

Cable Specifications	
Cable	10BASE-T/100BASE-TX Category 5
Cable Length	100 m (328 feet) or less

Software Specifications	
Supported Protocol	TCP/IP
Network Layer	IP, ICMP
Session Layer	TCP
Application Layer	LPD, FTP, DHCP, HTTPS, SNMP, NTP

7.7.3 Bluetooth Interface

This interface complies with the Bluetooth3.0+EDR standard.

Basic Specifications	
Signal Level	Class 2
Communication Distance	10 m (32.8 feet)
Profile	Serial Port Profile
Security Level	None, level 2, 2-1, 2-2, level 3, level 4
PIN Code	1 to 16 characters consisting of ASCII code (20H, 21H, 23H to 7EH)
Disconnect Timeout (LMP layer)	60 seconds

7.7.4 RS-232C Interface

This interface complies with the RS-232C standard.

Basic Specifications	
Asynchronous ASCII	Half-duplex communication Bi-Directional Communication
Data Transmission Rate	2400, 4800, 9600, 19200, 38400, 57600, 115200 bps
Transmission Form	Start, b1, b2, b3, b4, b5, b6, b7, b8, Stop “b8” will be omitted if using 7 bit oriented.
Data Length	7 or 8 bit (selected)
Stop Bit	1 or 2 bit (selected)
Parity Bit	ODD, EVEN, NONE (selected)
Codes Used	ASCII Character Codes: 7 bits, Graphics: 8 bits
Control Codes	STX (02H), ETX (03H), ACK (06H), NAK (15H)
Connector	DB-9 Female or equivalent
Signal Levels	High = +5 to +12 V, Low = -5 to -12 V
Protocol	Ready/Busy, XON/XOFF, Status3, Status4, Status5

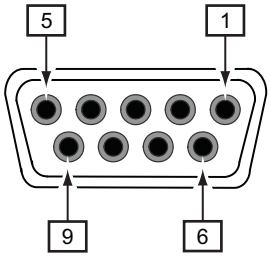

Connector Pin Specifications		
Pin No.	I/O	Description
1	-	Data Carrier Detect
2	Input	Receive Data
3	Output	Transmit Data
4	Output	Data Terminal Ready
5	Reference	Signal Ground
6	Input	Data Set Ready
7	Output	Request To Send
8	Input	Clear To Send
9	-	Not connected

Cable Specifications	
Cable Connector	DB-9 Male or equivalent
Cable Length	5 m (16.4 feet) or less

Note

- When using the READY/BUSY control, make sure that the printer is in power on mode before you send the data from the host.
- With communication protocols such as XON/XOFF, STATUS3, STATUS4 or STATUS5, a receive buffer full error will occur when the received data is more than the receive buffer size (2.95 MB). Send data that is less than 2.95 MB while monitoring the status of the printer.
- A parity error will be detected if this error occurs after the reception of ESC+A.

7.7.5 IEEE1284 Interface

This interface complies with the IEEE1284 standard.

Basic Specifications	
Connector	Amphenol 36 pins, female
Signal Levels	High-level: +2.4 to +5.0 V Low-level: +0.0 to +0.4 V
Receive Mode	Single-item buffer, Multi-item buffer

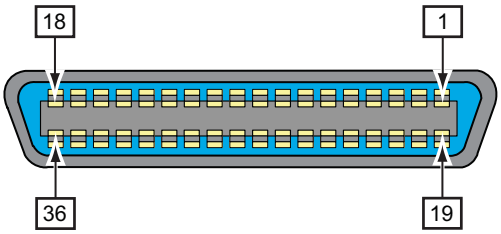

Connector Pin Specifications

Pin No.	I/O	Description
1	Input	STROBE
2-9	Input	DATA 1 - DATA 8 DATA1: LSB DATA8: MSB
10	Output	ACK
11	Output	BUSY
12	Output	PAPER EMPTY/PAPER ERROR
13	Output	SELECT
14	Output	AUTO FEED
15	-	Not in use
16	-	LOGIC Ground
17	-	Frame Ground
18		+5 V
19	-	STROBE RETURN
20-27	-	DATA 1 - DATA 8 RETURN
28	-	ACK RETURN
29	-	BUSY RETURN
30	-	PAPER EMPTY RETURN
31	Input	INITIALIZE

Connector Pin Specifications		
32	Output	FAULT
33-35	-	Not in use
36	Input	SELECT INPUT

Cable Specifications	
Cable Connector	Amphenol 36 pins, male
Cable Length	1.5 m (5 feet) or less

7.7.6 External Signal Interface (EXT)

This interface is designed to connect the printer with other peripherals.

Basic Specifications	
Connector	Centronics IDC Type 14 pins (female)
Signal Levels	High-level: +4.2 to +5.0 V Low-level: +0.0 to +0.7 V

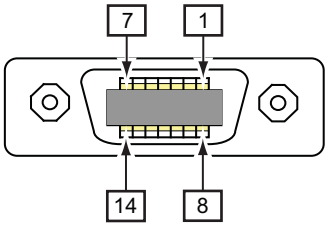

Connector Pin Specifications

Pin No.	I/O	Description
1	Output	Paper End: Outputs a low signal when the paper end is detected.
2	-	GND: Reference Signal Ground
3	Output	Ribbon End: Outputs a low signal when the ribbon end is detected.
4	Output	Machine Error: Outputs a low signal when an error such as the head open error is detected.
5	Input	Print start signal (PRIN): Prints one media when a low signal is detected.
6	Output	Print Done/Print end signal (PREND): Outputs a signal when the media print is completed.
7	Input	Reprint signal (PRIN2): Prints the previously printed content again when a low signal is detected.
8	Input	External power supply: 5 V
9	Output	Offline: Outputs a low signal when the printer is in offline mode.
10	Output	Ribbon Near End: Outputs a high signal when the ribbon near end is detected.
11	-	-
12	-	+24 V ± 10%
13	-	Vcc +5 V
14	-	-

Connector Pin Specifications		
*	Output	Dispense completion waiting signal: Outputs a low signal when the dispense is completed. You can set the pin number for output through the **Settings** > **Interface** > **External I/O** > **Signals** > **Outputs** menu.

Note

- You can set the external signal (EXT) type (TYPE1 to TYPE4) for Print Done output signal of pin No. 6. Refer to the **EXT Mode** screen of the **Interface** > **External I/O** > **Signals** menu for details.
- You can set the pin number for input and output through the **Settings** > **Interface** > **External I/O** > **Signals** > **Inputs** and **Outputs** menu.
- The Print Done signal of pin No. 6 is not outputted when 0 is specified in the number of cuts in the command specifying the number of cuts during the cutter operation.

Timing Chart of the EXT Input Signal

Item	Input Waveform
Print Start	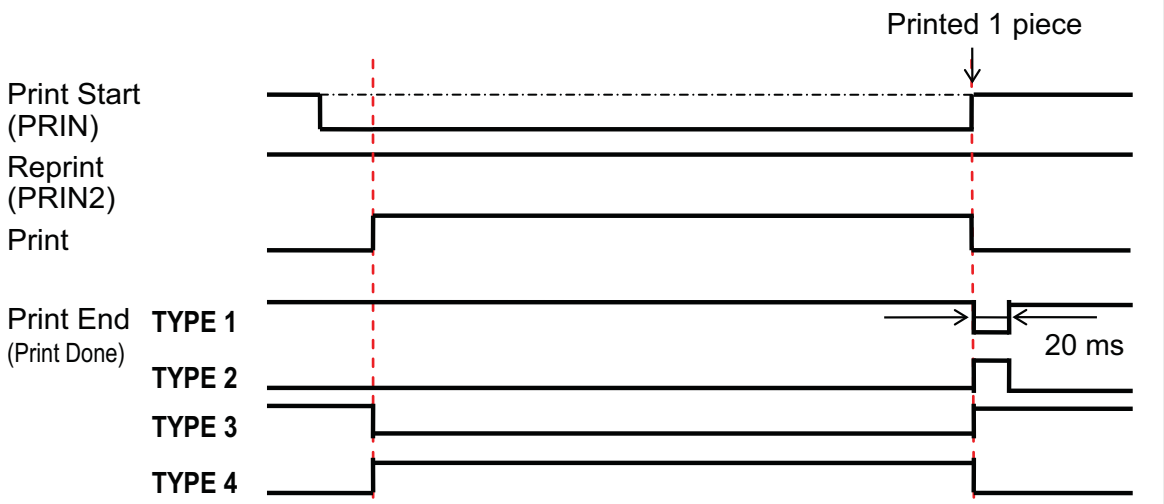
Reprint (no print start signal)	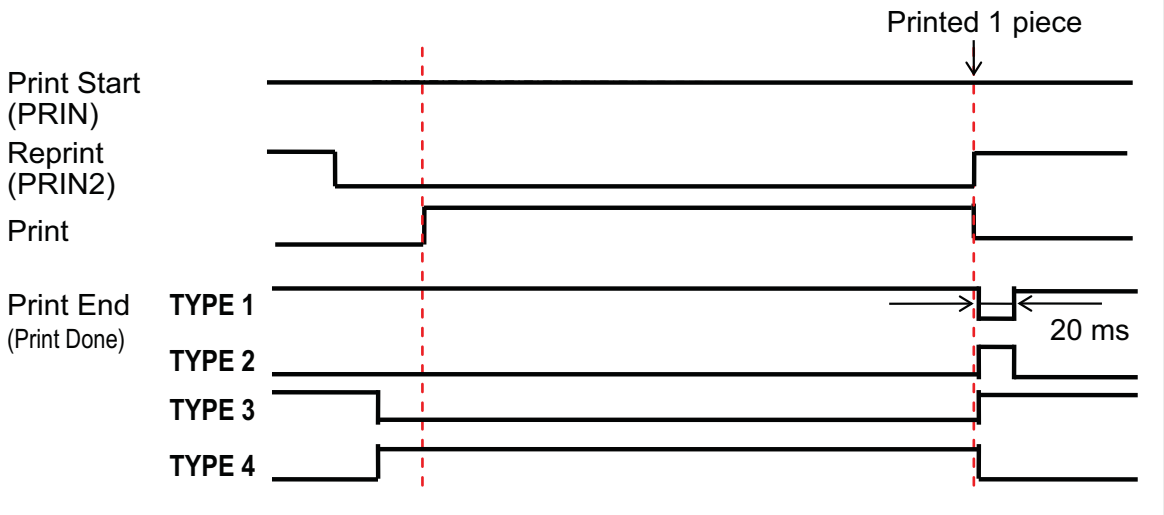
Reprint (with print start signal)	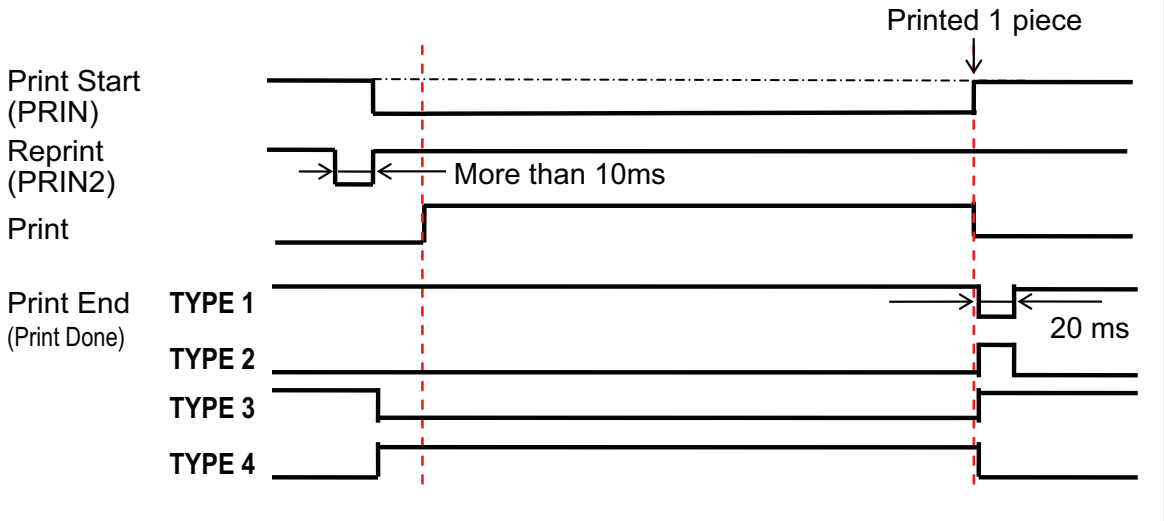

Supplementary explanation

- Keep the print start signal (PRIN) to “Low” until print end signal (Print done) is outputted. Refer to the below **Maintaining the Print Start Signal (PRIN)** timing chart.
- Keep the output reprint signal (PRIN2) for more than 10 ms. When signal is outputted for shorter than 10 ms, and reprint signal is not acknowledged, the printer does not perform reprinting.

Maintaining the Print Start Signal (PRIN)

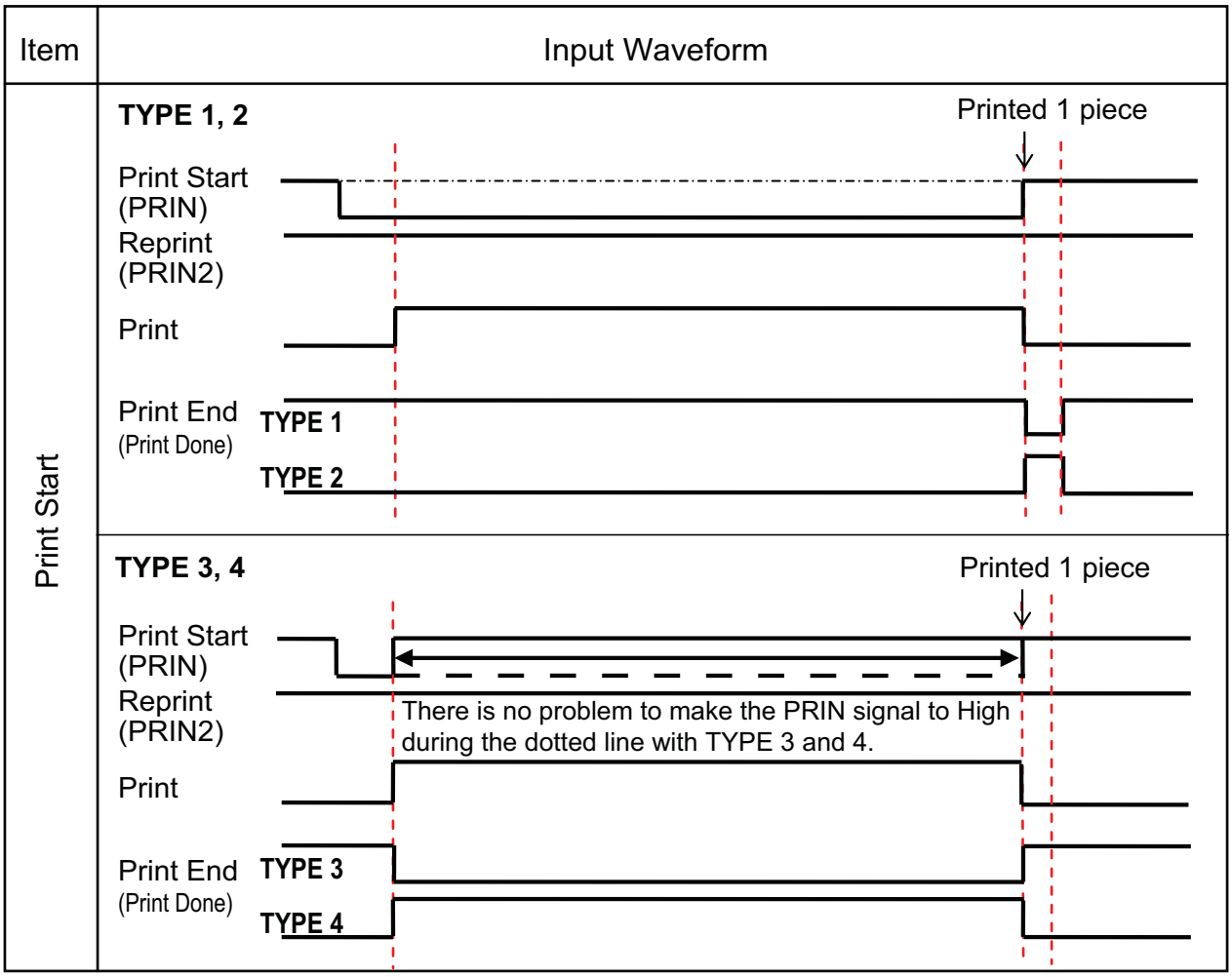

Item	Timing Chart
Print Done (PREND) Signal	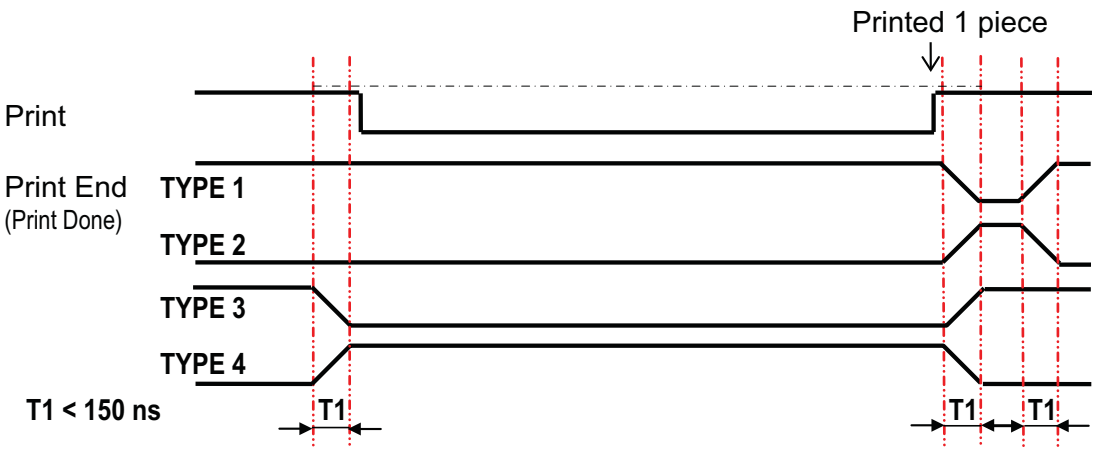

Rise or fall time (T1) of Print Done signal is less than 150 ns. You have to consider the time when outputting the signal from the connected devices.

- When the print start signal and reprint signal are outputted simultaneously, the print start signal is enabled and the printer does not perform reprinting.
- The reprint signal is valid only from the time of the print operation end (QTY=0) until the next print data reception. Other than that, the printer does not perform reprinting.

Timing Chart of the EXT Output Signal

Item	Output Waveform
Basic Operation	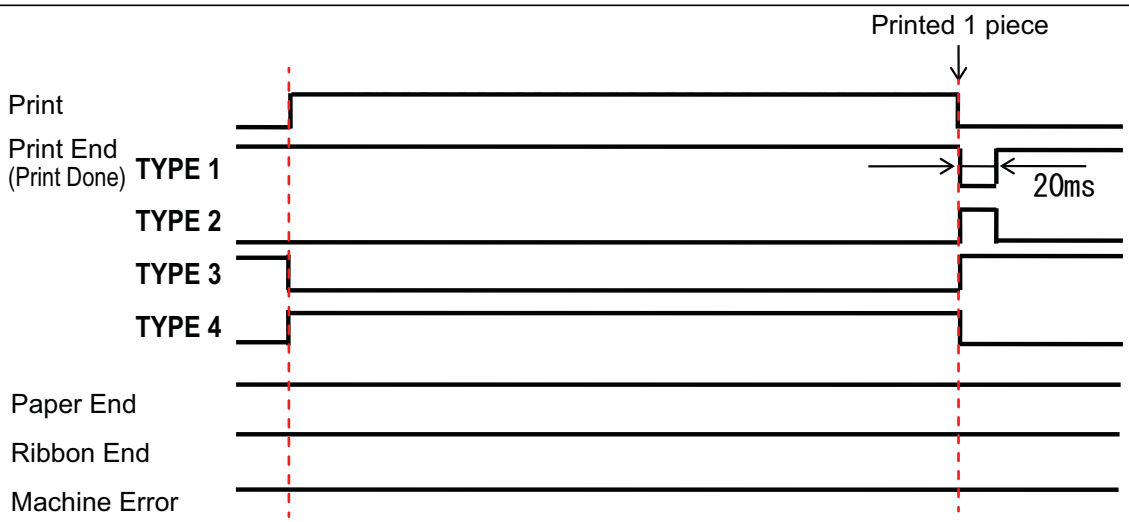
Paper End	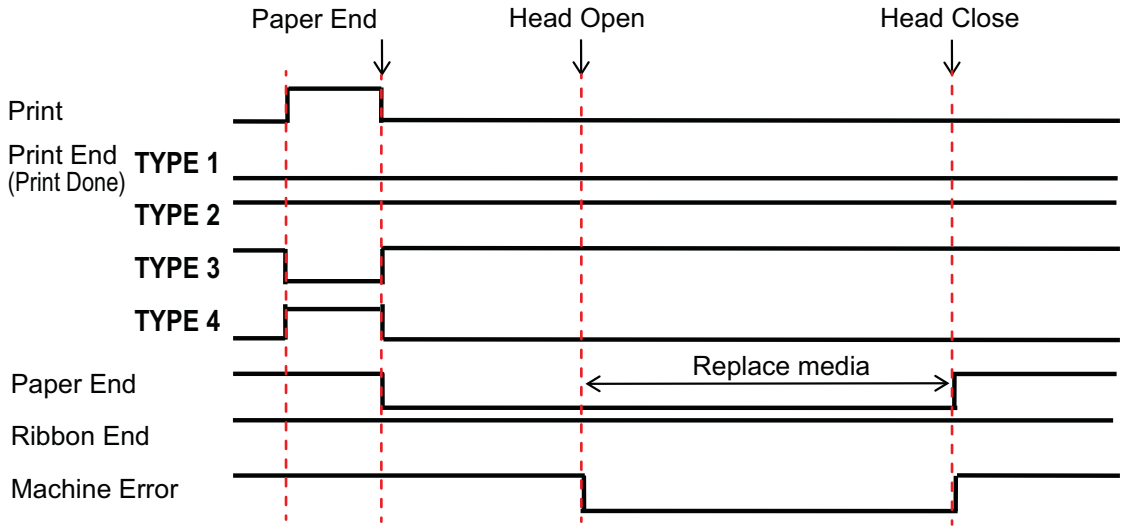
Ribbon End	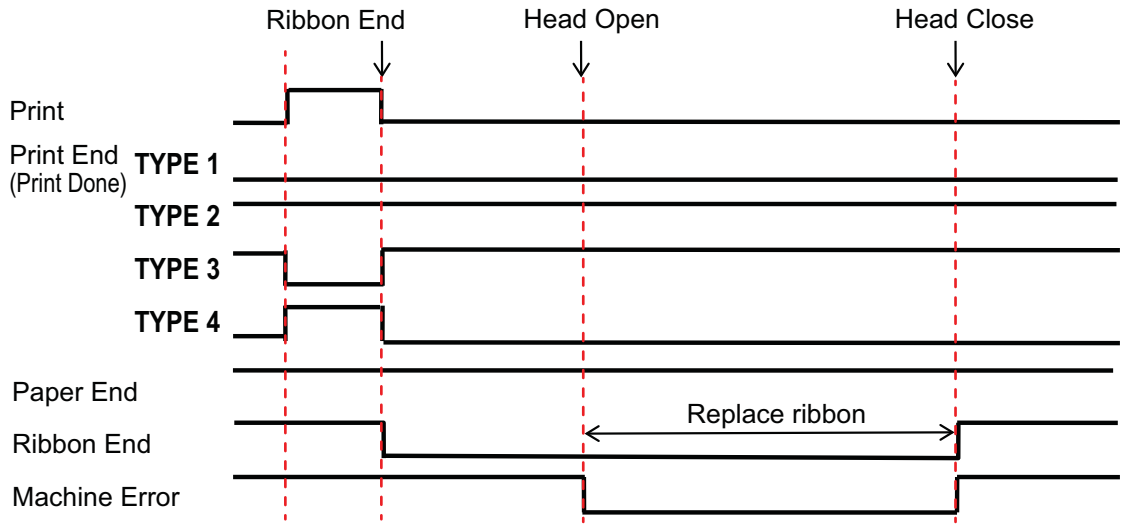

Item	Output Waveform
Machine Error	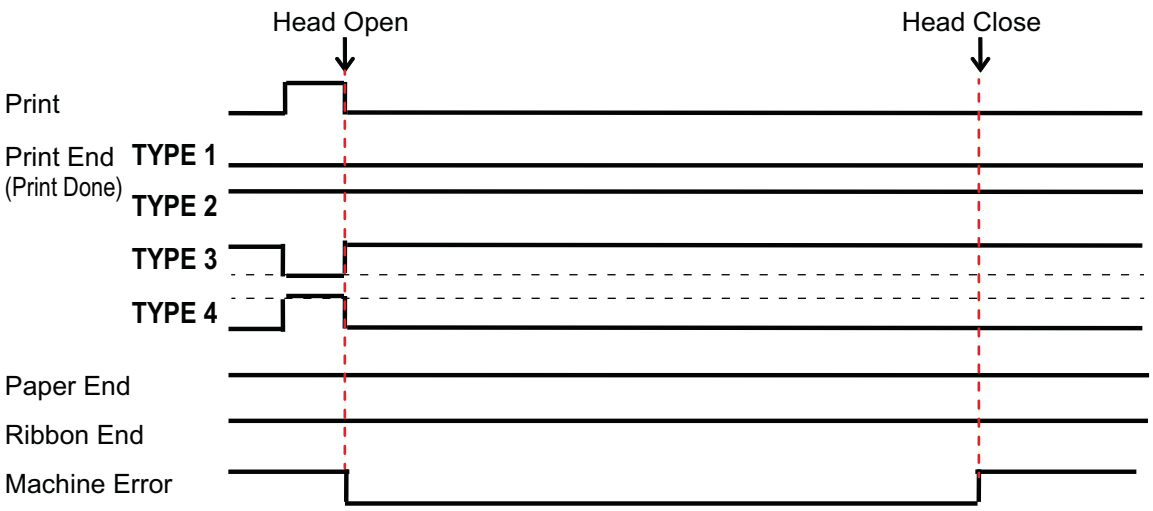
Ribbon Near End	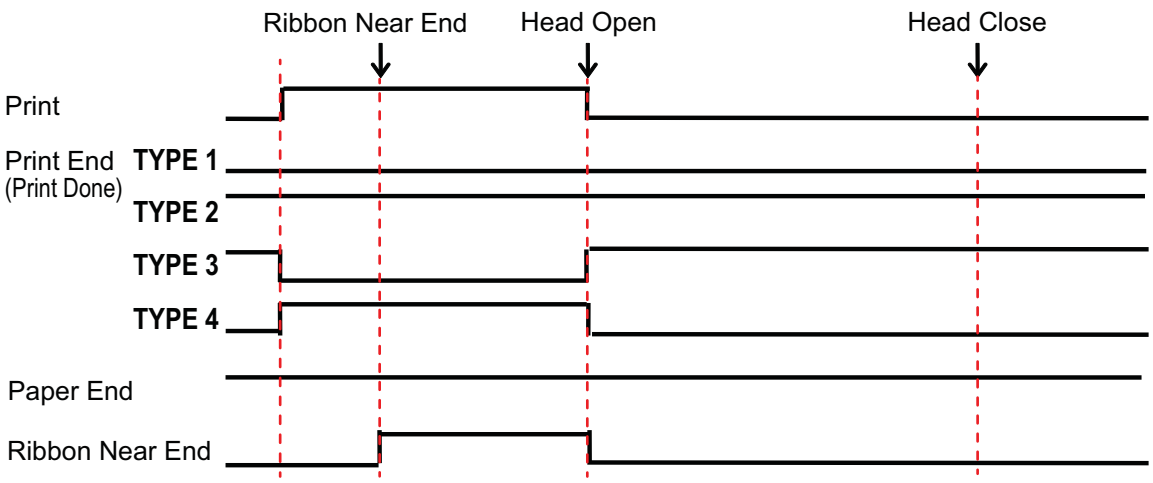
Offline	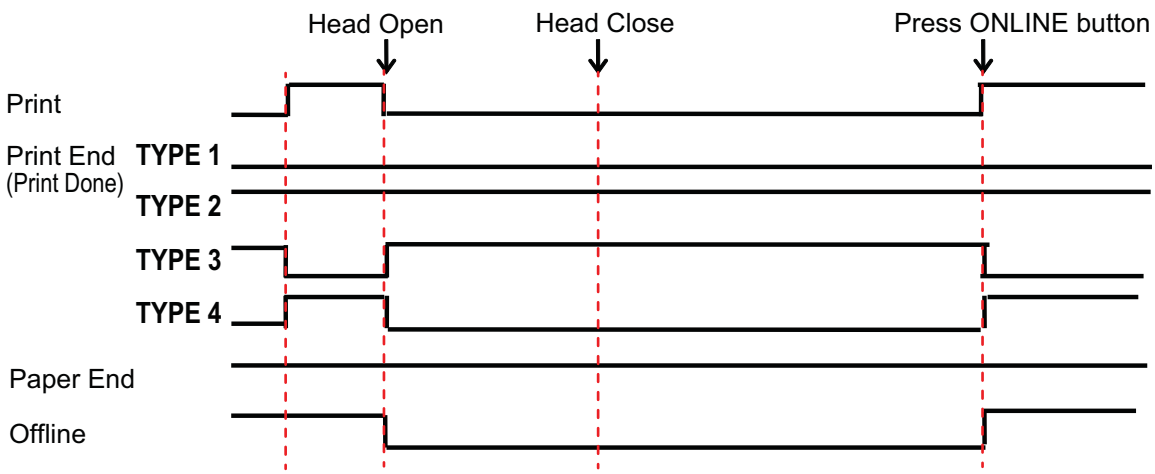

Timing Chart (Wait signal for dispense completion)

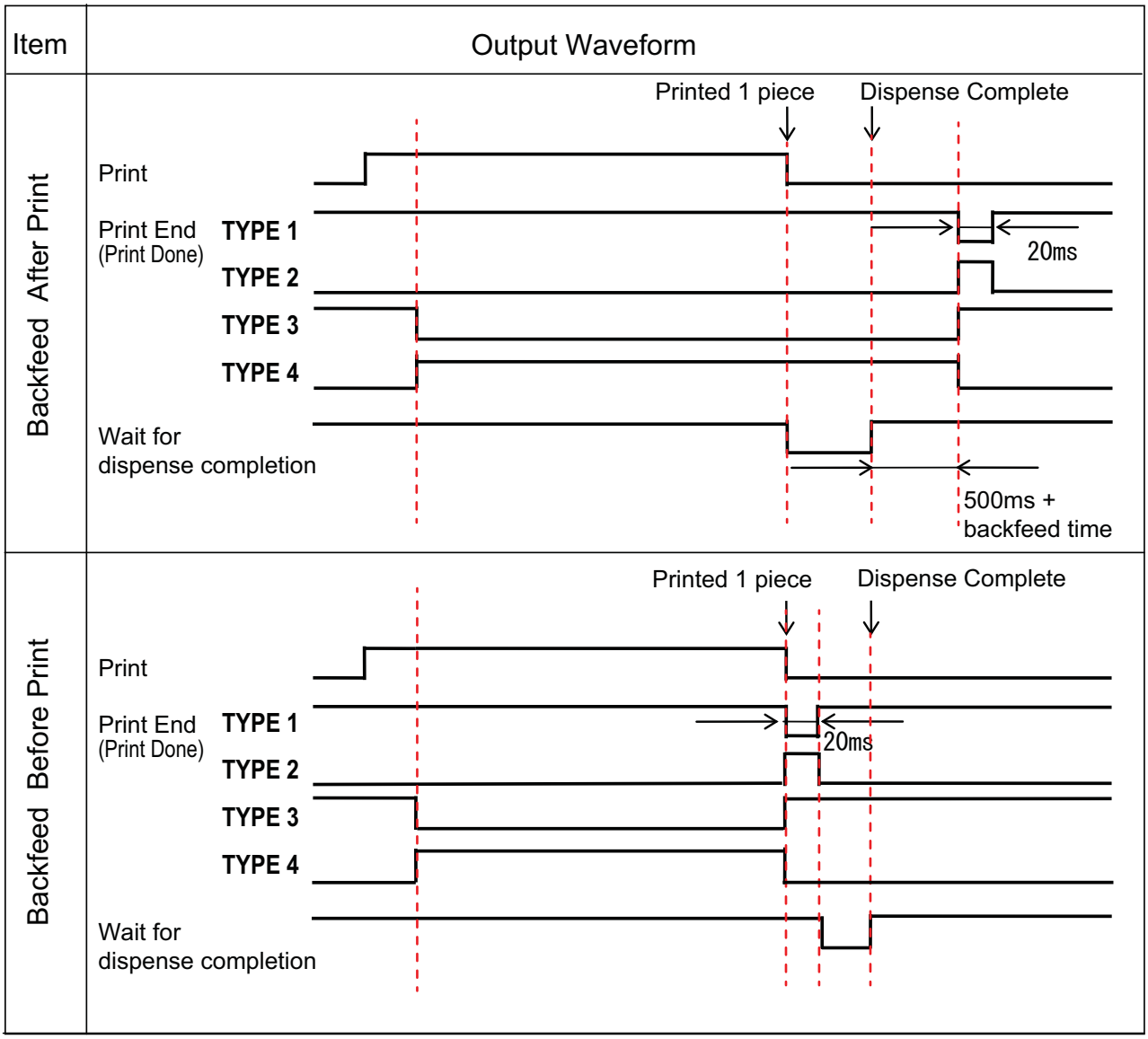

7.7.7 Wireless LAN Interface

This interface complies with the IEEE802.11a/b/g/n standard.

⚠ CAUTION

Before using wireless LAN near medical devices and facilities, consult your system administrator.

Basic Specifications	
Protocol	Status3, Status4, Status5
IP Address	IPv4 IPv6
Subnet Mask	IPv4 IPv6
Gateway Address	IPv4 IPv6
Data Transfer Method	802.11a: max 54 Mbps 802.11n: max 135 Mbps 802.11b: max 22 Mbps 802.11g: max 54 Mbps **Note** These are the logical values based on the wireless LAN specifications and are not the actual data transfer speeds.
Communication Distance	Indoor: max 100 m Outdoor: max 240 m Communication distance depends on environment.
Frequency Band	2.4 GHz (2.412 to 2.485 GHz) 5 GHz
Communication Channel	The number of channels you can set varies depending on the region where you use the printer.
SSID	Any alphanumeric character (maximum 32)
Authentication	Open System Shared Key WPA/WPA2 Perform the RADIUS server authentication using 802.1x (EAP-TLS, LEAP, EAP-TTLS, EAP-PEAP, EAP-FAST protocol)
Encryption	None WEP (64 bits/128 bits) AES (WPA-PSK/WPA2-PSK, WPA-802.1x/WPA2-802.1x authentication)
Communication Mode	Infrastructure Ad Hoc

Software Specifications	
Supported Protocol	TCP/IP
Network Layer	IP, ICMP
Session Layer	TCP
Application Layer	LPD, FTP, DHCP, HTTPS, SNMP, NTP

Extensive contact information for worldwide SATO operations can be found on the Internet at **www.satoworldwide.com**

SATO